TKIS - India / Vendor

Category Codes (Submission Purpose)

- ☐ 1 For Approval
- ☐ 2 For Review / Comments
- ☐ 3 For Information
- ☐ 4 For Engineering
- ☐ 5 For Enquiry
- ☐ 6 For Order Placement
- ☐ 7 Final & Approved
- ☐ 8 Released for Construction

Acceptance Codes (Approval Codes)

- ☐ 1 Approved
- ☐ 2 Approved for Manufacturing / Fabrication with Comments as marked
- ☐ 3 Not Approved / Resubmit
- ☐ 4 Retained for Information / Records
- ☐ 5 Reviewed
- ☐ 6 Reviewed as Noted / Resubmit

Remarks for AC2 : This marked-up drawings is hereby approved for fabrication / manufacturing and shall be re-sbumitted after revision. This drawing should be revised only to the extent of TKIS - India / Owner / Client comments. Any other changes made by you will not be considered unless clearly highlighted in covering letter asking for approval.

This approval / review does not absolve the supplier from the full responsibility for design and fabrication.

Date : ___/___/_____ Name : _____

TKIS - India / Owner / Client

Category Codes (Submission Purpose)

- ☐ 1 For Approval
- ☐ 2 For Review / Comments
- ☐ 3 For Information
- ■ 4 For Engineering
- ☐ 5 For Enquiry
- ☐ 6 For Order Placement
- ☐ 7 Final & Approved
- ☐ 8 Released for Construction

Acceptance Codes (Approval Codes)

- ☐ 1 Approved
- ☐ 2 Approved for Manufacturing / Fabrication with Comments as marked
- ☐ 3 Not Approved / Resubmit
- ☐ 4 Retained for Information / Records
- ☐ 5 Reviewed
- ☐ 6 Reviewed as Noted / Resubmit

Date : ___/___/_____ Name : _____

Rev.	Status	Description	Date	Prepared	Date	Checked	Date	Approved	AC
				PDW		MSD		MSD	
00		Issued for Engineering	27.10.17	PDW	27.10.17	MSD	27.10.17	MSD	-

Barcode

Category Code: - 04

© Copyright 2016 : All rights reserved
ThyssenKrupp Industrial Solutions (India) Private Limited

INDEX SHEET

The document Cover Sheet indicates revisions made in this document along with the purpose of issue of the revised document. The details of revisions made in the enclosures of this document are listed in the Table of Contents below and the enclosures listed therein are an integral part of this document.

Table of Contents:

Part	Size	Description	QAD Code	No. of Pages	Latest Rev.
-	A4	Index Sheet and Status of Revision	-	3	0
Part-I	A4	Installation Detail-Power	PIN-LEP–ELT-4001	26	0
Part-II	A4	Installation Detail-Earthing	PIN-LEP–ELT-4002	49	0
Part-III	A4	Installation Detail-Lighting	PIN-LEP–ELT-4003	55	0
Part-IV	A4	Installation Detail-Lightning Protection	PIN-LEP–ELT-4004	24	0
Part-V	A4	Installation Detail-Communication & Public Address	PIN-LEP–ELT-4010	24	0
Part-VI	A4	Installation Detail- Fire Alarm	PIN-LEP–ELT-4011	29	0

Notes:

1. Typical Installation details given in this document are for reference only. These details shall give only a general guideline of how the installation is intended to be done.
2. The complete supply and installation of all material included in the installation details is in the scope of ***LSTK CONTRACTOR***. The installation details shall not be referred for any split of scope.
3. Wherever there is mentioned '***CLIENT***', '***ELECTRCIAL CONTRACTOR'***, '***CIVIL CONTRACTOR'***, 'etc in the installation details, it shall be read as '***LSTK CONTRACTOR' ONLY***. LSTK Contractor reserves the right to define scope of work internally between his electrical or civil contractor.
4. Material indicated in the installation detail shall not be followed. For material of various equipment's & bulk items, LSTK Contractor shall refer to the project specific requirements indicated in the various technical specification included in Volume 4 section 06 of this tender. Accordingly installation details shall be updated by the LSTK Contractor.
5. Requirement of quantities in installation detail are only for reference and shall be estimated by LSTK Contractor with respect to individual standards.
6. Material for hardware/accessories shall be stainless steel.
7. LSTK Contractor shall develop any additional detail not covered in this document but required for the installation of any equipment as per project requirement.

INSTALLATION DETAIL-POWER

LIST OF INSTALLATION STANDARDS

Sr. No.	Description	Typical No.	No. of Sheets	Rev
1	TYPICAL DETAILS FOR DIRECTLY BURIED CABLES	PCLB1	1	00
2	TYPICAL DETAILS FOR CABLES BURIED	PCLB2	1	00
3	TYPICAL DETAILS FOR CABLES LAID IN SAND FILLED BUILT-UP TRENCHES	PCLT1	2	00
4	TYPICAL DETAILS FOR CABLES LAID IN BUILT-UP TRENCHES WITH CABLE TRAY	PCLT2	2	00
5	CABLE MARKER	PCMG1	1	00
6	LOCAL CONTROL STATION ON BRICK/CONCRETE WALL	PCSC1	1	00
7	LOCAL CONTROL STATION ON SLEF-STANDING PEDESTAL	PCSP1	1	00
8	LOCAL CONTROL STATION ON STEEL PLATFORM/GRATING	PCSP2	1	00
9	LOCAL CONTROL STATION SUPPORTED FROM MOTOR FOUNDATION	PCSP3	1	00
10	LOCAL CONTROL STATION ON RAILING	PCSR1	1	00
11	LOCAL CONTROL STATION ON STEEL STRUCTURE	PCSS1	1	00
12	DISTRIBUTION BOARD/PANEL (≤1000MM) ON BRACKET, ON WALL/ CONCRETE COLUMN	PDBC1	1	00
13	DISTRIBUTION BOARD/PANEL (≤1000MM) ON BRACKET, ON STRUCTURAL COLUMN	PDBS1	1	00
14	DISTRIBUTION BOARD/ PANEL ON CONCRETE FLOOR, ON SELF STANDING PEDESTAL	PFPP1	1	00
15	DISTRIBUTION BOARD/ PANEL ON STEEL PLATFORM, ON SELF STANDING PEDESTAL	PFPP2	1	00
16	POWER & CONTROL CABLING FOR MOTORS, ROUTED ABOVE GROUND	PMAG1	1	00
17	POWER & CONTROL CABLING FOR MOTORS, ROUTED IN UNDERGROUND TRENCH	PMUG1	1	00
18	POWER & CONTROL CABLING FOR MOTORS, ROUTED IN UNDERGROUND TRENCH & CONDUITS	PMUG2	1	00
19	SOCKET OUTLET ON BRACKET, ON WALL/CONCRETE COLUMN	PSOC1	1	00
20	SOCKET OUTLET ON BRACKET, ON STRUCTURAL COLUMN	PSOS1	1	00
21	TYPICAL DETAILS OF CABLE TRAY SUPPORTING: TYPE-1	PCTS1	1	00
22	TYPICAL DETAILS OF CABLE TRAY SUPPORTING: TYPE-2	PCTS2	1	00
23	TYPICAL DETAILS OF CABLE TRAY SUPPORTING: TYPE-3	PCTS3	1	00
24	TYPICAL DETAILS OF CABLE TRAY SUPPORTING: TYPE-4	PCTS4	1	00
25	TYPICAL DETAILS OF CABLE TRAY SUPPORTING: TYPE-5	PCTS5	1	00
26	TYPICAL DETAILS OF CABLE TRAY SUPPORTING IN CELLAR	PCTS6	1	00
27	STANDARD STEEL SECTIONS: WEIGHT & DIMENSIONS	-	1	00

1. **General:**

a. All the documents/drawings as indicated below shall be prepared by the LSTK Contractor as a part of detail Engineering.

b. These notes shall be read and construed in conjunction with power layout drawings and Installation Standards - Power.

c. Cable tray erection and cable laying shall be carried out as per Overall Cable Routing Layout, Power Layouts of individual units and Cable List.

d. Routing of Power and control cables near the termination point shall suit the site conditions to facilitate easy maintenance, avoid damage during operation and maintain aesthetic appeal.

e. Sealing compound shall be supplied and installed by the LSTK Contractor.

2. **Cable tray installation:**

a. Installation of cable trays shall be carried out as detailed in layout drawings. Co-ordinates of cable trays shall be represented as distance of the tray centerline from a reference point.

b. Cable tray shall be supported at intervals not exceeding 3 meters for horizontal run & 2 meters for vertical run.

c. Cable tray supports and/ or insert plates shall be provided for supporting of Cable trays/ JB/ Socket outlets/ LCS/ SLDB using anchor fasteners.

3. **Cable laying :**

a. Cable laying above ground:

i. Cables laid on trays below the slab shall be brought up through the slab, after drilling/ chipping at the required locations, pipes/ conduits shall be used for the slab crossings and the same shall be sealed adequately in an approved manner to prevent ingress of dust/ dirt and water after laying of cables.

ii. Wherever cables are not laid in the cable tray, same shall be laid in GI/ PVC conduits of suitable size up to the electrical equipment. If more than one cable is to be laid through GI/ PVC conduits, all the cables shall be tied together with nylon cable tie at every 300 mm interval while inserting the cables through conduit. The conduits laid on wall or structure shall be clamped with GI clamps at every 1000 mm. Further structural supporting arrangement wherever required shall be provided. Conduits shall be sealed with sealing compound at both ends.

iii. Cable drums shall be rolled only in the direction indicated on the side of the drum. The drum shall be braked to avoid overrunning. At no time shall a cable be handled in such a way that it takes up a radius less than its permissible installation bending radius.

iv. Unless otherwise permitted by the cable manufacturer and approved, minimum allowable bending radii shall comply with the following:

- Wire armoured cables, 15 times the cable outside diameter.
- Unarmoured thermoplastic insulated cables, 12 times the cable outside diameter.

v. Cables shall not be pulled using the conductors. Maximum stresses stated by the cable manufacturer shall not be exceeded when laying or pulling any cables.

vi. Cables installed in cable ladders shall be:

- Protected from mechanical damage or abrasion at entry or exit points.
- Secured to ladder or tray using UV resistant heavy duty nylon cable ties at least every 1500 mm on horizontal runs and 900 mm on vertical runs.

vii. Single cables running outside cable ladders shall follow structural steel and be supported every 300 mm. Where necessary, additional brackets shall be installed to support cable drops to equipment.

viii. Cables supported from catenary wires shall be secured using cable ties at intervals of not more than 1 m.

ix. Where single core cables are used for three phase circuits, they shall be arranged in trefoil formation and clamped with non-magnetic cable clamps, or other approved type. Clamps shall be located at the following locations:

- As close as possible to each cable termination.
- At the start and finish of each bend.
- At the midpoint of bends greater than 400 mm radius.

x. Cables with an outside diameter up to 20 mm entering equipment such as motors, control stations and instruments shall have a looped coil prior to entering the equipment to relieve stress, allow future adjustment, and prevent water ingress.

xi. Unless approved by Owner/Consultant, jointing of main supply cables shall not be permitted. Joints in lighting and power final sub-circuits are not permitted, except for looping purposes.

b. <u>Cable Ducts</u>

i. Underground cable ducts shall be heavy duty rigid PVC conduit, or PVC pipe.Each duct system shall be complete with manholes and pull pits as necessary to facilitate installation and possible future replacement of cables.

ii. The underground duct requirements shall be ascertained at an early stage and coordinated with the civil construction work. Where ducts run beneath roads or through foundations, at least 50% spare duct capacity shall be provided above the immediate requirements. Separate duct systems shall be provided for HV/LV power cables and communications cables.

iii. At least one spare PVC covered draw wire shall be provided in each duct on completion of all cable laying/pulling. Ducts greater than or equal to 100 mm nominal diameter shall be provided with two spare draw wires.

iv. Electrical services ducts carrying unarmoured cables, or armoured cables not installed on ladders, shall be saddled to masonry, concrete or steelworks via cable clamps to fixed supports at not more than 1 metre spacings. Supports shall be provided with 25% extra width to accommodate future cables.

c. <u>Cable laying below ground</u>:

i. Cables laid underground through Hume pipes/ GI pipes shall have a clearance of 300 mm with utility lines, pipe lines, storm water drains to avoid interference. Hume pipes/ GI pipes shall be closed at both ends by sealing compound.

ii. Cables laid in trenches without cable trays shall be laid in layers separated by sand and trenches shall be filled with sand if indicated in layout drawings. The trenches shall then be covered as per details shown in layout drawings.

iii. Cables emerging from trenches for termination on equipment shall be protected by local GI pipes up to a height of 300 mm above the finished floor/ pavement level. Pipes shall be fixed on the trench wall and shall be sealed with compound.

iv. Trenches shall be of adequate depth to provide the following minimum cover over any direct buried cable or underground duct:

Application	Minimum cover
Bare or PVC-covered earth cables	600 mm
Cables with active conductors	750 mm

Cables below roads and rail crossings	1000 mm

v. Direct buried cables (except bare earth conductors) shall be packed with screened fine sand, free from stone or chemically active material, to a finished thickness of at least 75 mm of packing on all sides. Mechanical protection covers with minimum width 150 mm shall be provided on top of the packing along the full length of direct buried cables. Trenches shall be backfilled and compacted in 300 m thick layers, and formed to a crowned surface.

vi. An orange PVC marker tape, marked "Danger Electrical Cables" or equivalent, with a minimum width of 150 mm shall be laid continuously along the route of the cables at a depth of 300 mm below ground level. The marker tape may be incorporated with the cable protection cover.

vii. Cables leaving the ground shall be protected by galvanised steel water pipe or rigid PVC conduit of adequate diameter secured in position, extending from 400 mm below ground level to a minimum height of 100 mm. PVC conduit used for this purpose shall be treated for exposure to direct sunlight or be painted with a water-based acrylic paint and also shall be sealed with compound.

d. Clamping :

i. Single core power cables for 3 phase supply laid on cable trays or on ground shall be clamped in trefoil formation, using pressure cast aluminium trefoil clamps at every 1000 mm interval. Additional clamps shall be used wherever cables change their direction of run.

ii. Multicore cables laid on cable trays shall be tied individually with nylon tie at each rung or by 25 x 3 mm aluminium clamps at every 1000 mm interval on horizontal run and at every 600 mm interval on vertical run.

4. Cable Markers :

Above-ground cable route markers indicating the direction of buried cables shall be installed over the cables before and after road or railway crossings, at both ends and each change of direction and at 25 m intervals in between.Cable joint markers shall be installed over each buried joint. Cable markers shall be constructed of precast concrete slabs with corrosion-resistant metal (e.g. stainless steel) inserts recording the direction of the cable route or the position of cable joints.

5. Cable Tags :

Cables shall be tagged as detailed in the termination diagrams and cable schedules. Cable tags shall be proprietary non-metallic labels with numbers which are clear and indelible and fixed:

To each end of the cable.

Before and after points where its route cannot easily be followed, e.g.,where a cable passes through walls and floors, under roads and pipelines.

At both ends of any straight through joint.

6. Sealing

All cables and cable ducts passing though walls and floors shall be sealed.

Sealing shall be suitable for:

- Filling of voids.
- Weatherproofing.
- Fire rating, (as required).
- Preventing migration of hazardous gas to non-hazardous areas. (where applicable)

7. Cable Core Identification and Looming

Core number ferrules as detailed on the drawings shall be fitted to each end of all cores of control and instrumentation cables. Adhesive and 'C' type ferrules are not acceptable. Where core

diameters are too small for the ferrule, a tight sleeve shall be installed between the core and the ferrule.

Cores of each cable shall be neatly loomed together using lacing or nylon cable ties. Cores of different cables shall not be loomed together.

8. Cable Termination

Competent and experienced cable jointers shall be employed for carrying out cable termination work with a high standard of workmanship. Connection of cables and cable termination shall be carried out in accordance with cable manufacturer's instructions or as directed by Engineer-In-Charge.

All HV cable joints shall be carried out in the presence of the Engineer-In-Charge or his authorized representative, unless this requirement is waived in writing.

a. Termination of Power & Control Cables

i. Armoured cables shall be terminated with double compression type cable glands. Unarmoured cables shall be terminated by single compression type cable glands.

ii. Cable glands shall be used on all cable terminations. Glands shall be selected for application as hazardous or non-hazardous.

iii. Each cable gland shall be effectively bonded to the local earth busbar.
Gland plates shall be:
   a. Tapped where terminating armoured type cable glands for cables in or entering hazardous areas.
   b. Separately earthed via an earth strip.
   c. Non ferrous where glanding single core cables.
   d. Have unused entries plugged.

iv. When armoured cables are used, the armour shall be prepared in a manner suitable for the type of cable glands. Armour shall be securely clamped and bonded to the body of the gland. Armour shall be properly cleaned and petroleum conducting jelly applied to the armour as well as clamping surfaces.

v. When cable glands are fixed onto a sheet metal enclosure with a slip hole, a bonding/ earthing washer and a heavy check nut shall be used to ensure effective bonding of the cable gland with the enclosure. Paint shall be removed around the holes to ensure firm earth contact when the check nut is tightened.

vi. Wherever gland plates are supplied undrilled, drilling and tapping (if required) of gland plates of equipment shall be carried out by the LSTK Contractor as part of cable termination work. In MCCs and Switchgear panels holes shall be drilled for spare feeders also. Further sufficient number of spare holes of required sizes shall be provided in all gland plates in consultation with Engineer-In-Charge. All unused holes shall be plugged properly in an approved manner as indicated by Engineer-In-Charge using metallic plug at top and bottom fastened by bolt and nut to make panel dust and vermin proof.

b. Prevention of Strain at Termination

i. Special attention shall be given to ensure that the cable is adequately supported so that there is no strain on the termination or connection of conductors. Control cables entering control panel/ switchgear shall be bunched together and tied with nylon cords to keep them in position at the terminal block.

ii. In case of small sized cables slight allowance shall be kept for the movement of motor without any strain on termination, particularly for belt coupled motors. Extra length of cables shall also be provided on trays for allowing re-terminations.

iii. Cables terminated on equipment which is subject to vibrations shall be provided with strain relief clamps where the support for the cable is derived from the equipment. As far as possible the

support from the equipment shall be avoided and a separate independent support shall be provided.

c. HV End Termination

i. HV cables of 11 & 6.6 kV grade and above shall be terminated with termination kits suitable for the voltage grade and type of application.
ii. Manufacturer's recommended procedure for termination of XLPE cable shall be adhered to. Termination shall be done by certified and experienced cable jointer familiar with the technique of termination of special cable termination kits.
iii. Armour shall be bonded to earth terminal provided inside the cable box using tinned copper braid.
iv. Cables shall be supported adequately at the entry to cable box/ equipment so that load of cable does not come on cable gland and terminals.
v. Unless otherwise specified, all HV cables shall be terminated in air insulated cable boxes with glands using heat shrink termination kits. All HV terminations into terminal boxes shall be fully shrouded using heat shrink boots. Each phase conductor shall be fitted with a minimum of three weather sheds for protection against tracking.

d. Straight through Joints

i. Jointing of cables shall be done with extreme care and manufacturer's instructions shall be strictly followed. Earth continuity wire shall be plumbed and/ or clamped. Compound should be filled according to the instructions of manufacturer of terminating kit/ cable. Joints made in trench or on racks shall be properly supported. Wherever joints are made in cables directly buried in the ground, brick masonry work shall be done around the joint box and filled with sand and thereafter covered with earth, at no extra cost.
ii. A tent should be used in all circumstances where jointing work is being done outdoor, for protection against rain and to prevent dust from being blown into exposed joint and jointing materials.
iii. Extreme care shall be taken to maintain proper phase sequence while terminating at equipment ends.
iv. Record of connection details shall be maintained.
v. Conductor shall be shaped properly while terminating and no sharp bend shall be given. Where number of cables are connected in parallel, proper tests shall be carried out for identification before connecting so that no cross connection is made. No phase crossing shall be allowed for making the connection.
vi. All cables shall be meggered before and after termination and IR values recorded.

9. Equipment :

a. LCS shall be mounted near the motor on the nearest column/ structure. In case free standing, location to be finalised at site to suit site condition.
b. NGR enclosure shall be insulated from ground. Armour of cables shall not be connected to NGR enclosure.
c. Junction boxes, Socket outlets & LCS shall be mounted at 1.2 meter elevation measured from finished floor level to the bottom of the equipment unless otherwise specified.

10. Miscellaneous :

a. Cable tray covers shall be provided for outdoor ladder type cable trays exposed to sun in Slurry Area . Only top most cable tray shall be covered.
b. Fabrication & painting of cable tray supports/ cable supports shall be done as described in Installation Specification.

c. For motors 45 kW & above, cables from main cable tray to individual consumer shall be routed through suitable size cable tray and for other motors cables shall be routed through steel channel used for LCS / main cable tray support.

d. 'RTD/BTD' cable shall be routed through instrumentation 'IS/IF' cable tray. 'RTD/BTD' cables shall be tapped from instrumentation 'IS/IF' cable tray & routed through 50/100mm cable tray up to the respective motor.

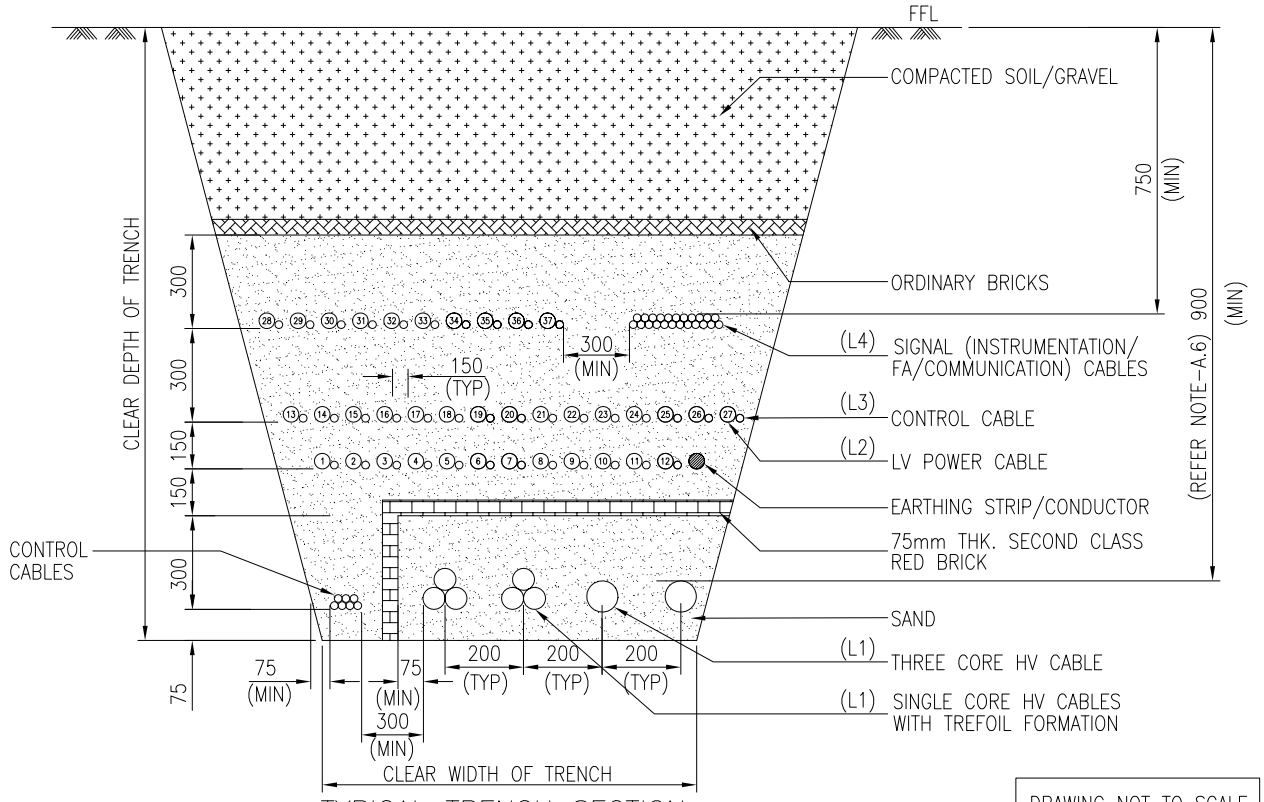

TYPICAL TRENCH SECTION

DRAWING NOT TO SCALE

A) INSTALLATION NOTES:

1) ALL DIMENSIONS ARE IN MM UNLESS NOTED OTHERWISE.
2) RIVER SAND SHALL BE SIEVED & FREE FROM STONES.
3) APPROVAL SHALL BE OBTAINED FROM SITE ENGINEER BEFORE SAND FILLING AND PROCEEDING FOR SUBSEQUENT LAYER OF CABLES.
4) EARTHING CABLE/STRIP CAN BE INSTALLED IN ANY OF THE LAYER. LAYER WITH LV CABLES IS PREFERRED.
5) CERAMIC TILES/BRICKS SHALL BE OF APPROPRIATE VOLTAGE GRADE.
6) AS PER IS:1255, ALL HV CABLES >11KV SHALL BE INSTALLED AT A DEPTH OF 1050MM.

B) ENGINEERING NOTES:

1) HORIZONTAL SPACING SHOWN BETWEEN SIMILAR VOLTAGE GRADE CABLES (HV-HV, LV-LV) IS INDICATIVE ONLY. ACTUAL SPACING SHALL BE DECIDED DURING ENGINEERING CONSIDERING GROUPING OF CABLES, DE-RATING FACTOR ETC.
2) LAYER CONFIGURATIONS SHALL BE PROJECT SPECIFIC. E.G. LAYER 1 CAN BE HV CABLES WITH LV CABLES OR HV CABLES WITH ASSOCIATED CONTROL CABLES. HOWEVER, PARTITION METHOD & MINIMUM CLEARANCES SHALL BE MAINTAINED AS INDICATED.
3) IN CASE LAYER-2 IS ENVISAGED AS HT LAYER, CLEAR VERTICAL DISTANCE BETWEEN LAYER-1 & LAYER-2 SHALL BE MINIMUM 150MM. IN SUCH CASE, NOTE A.6 SHALL BE OBSERVED CONSIDERING LAYER-2.
4) THERMAL RESISTIVITY OF SAND SHALL BE OF KNOWN VALUE. RECOMMENDED VALUE SHALL BE CORRESPONDING TO DE-RATING FACTOR OF 1 OR HIGHER. SAME SHALL BE INFORMED TO CIVIL/EL CONTRACTOR DEPENDING ON SCOPE OF SUPPLY.

C) NOTES FOR CIVIL COORDINATION

1) CLEAR DEPTH OF TRENCH SHALL BE DECIDED BASED ON NO. OF CABLE LAYERS, WATER TABLE, CABLE ROUTING LAYOUT, UNDERGROUND COORDINATION ETC.
2) SCOPE MATRIX SHALL BE FINALIZED WITH CIVIL (PROJECT SPECIFIC). SAMPLE IS INDICATED BELOW.

ACTIVITY DESCRIPTION	BY
SUPPLY OF SAND, BRICKS/TILES	CI
EXCAVATION, INSTALLATION OF SAND, BRICKS/TILES & BACK FILLING	EL

SEQUENCE OF LAYERS	
(L1) LAYER-1	HV CABLES LAYER & ASSOCIATED CONTROL CABLES
(L2) LAYER-2	LV CABLES 1ST LAYER
(L3) LAYER-3	LV CABLES 2ND LAYER
(L4) LAYER-4	SIGNAL CABLES (MULTI-LAYER) & LV CABLES 3RD LAYER WITH SPACING

NOTES B) & C) TO BE REFERRED & REMOVED BEFORE RELEASE OF THIS DOCUMENT

Code	Contract No.	Document ID	Part	Rev.
		PIN-LEP-ELT-4001		00

Rev.	Date	Name (Drawn/Prepared)	Date	Name (Checked)	Date	Name (Approved)	Description	Acc. Code	Cat. Code	Acc. Code	Status
00	19.07.2017	KRP	19.07.2017	MLD	19.07.2017	RPM	19.07.2017	RPM	ISSUED AS STANDARD		

BAR-Code

Store Location: Server/Share

Store Location: Folder

Store Name PCLB1.DWG

Pro. Unit	TON	Group	Type of Document	Sheet
				1 / 1

Con. Unit	Scale	Order No.
	NTS	

thyssenkrupp

	Date	Name
Drawn	19.07.2017	KRP
Prepared	19.07.2017	MLD
Checked	19.07.2017	RPM
Approved	19.07.2017	RPM

Description

INSTALLATION STANDARDS – POWER
TYPICAL DETAILS FOR DIRECTLY BURIED CABLES (PCLB1)

ISO A4

© thyssenkrupp Industrial Solutions (India) Private Limited 2017. All rights reserved

UH_BO_ISO_A4_P_E_tktSIndia.dwg / AG03_UH_BO_ISO_A4_P.dwg / 14.12.2016

UH_BO_ISO_A4_P_E_TKISIndia.dwg / AG03_UH_BO_ISO_A4_P.dwg / 10.10.2014

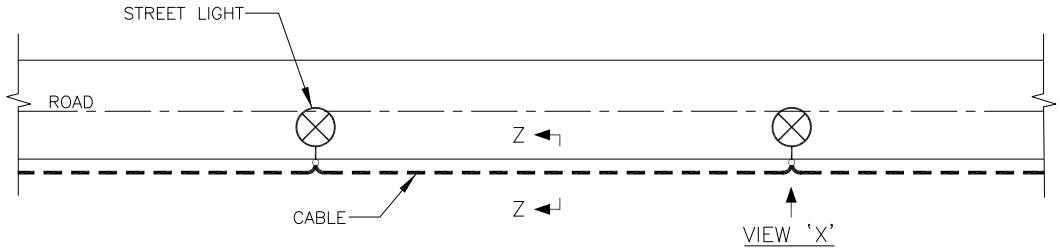

STREET LIGHTING LAYOUT (PLAN)
(TYPICAL)

SCOPE MATRIX SHALL BE FINALIZED WITH CIVIL (PROJECT SPECIFIC).
SAMPLE IS INDICATED BELOW.

ACTIVITY DESCRIPTION	BY
SUPPLY OF SAND, BRICKS/TILES,	CI
INSTALLATION OF SAND, BRICKS/TILES AND CABLES	EL

NOTE & TABLE TO BE REFERRED & REMOVED BEFORE RELEASE OF THIS DOCUMENT

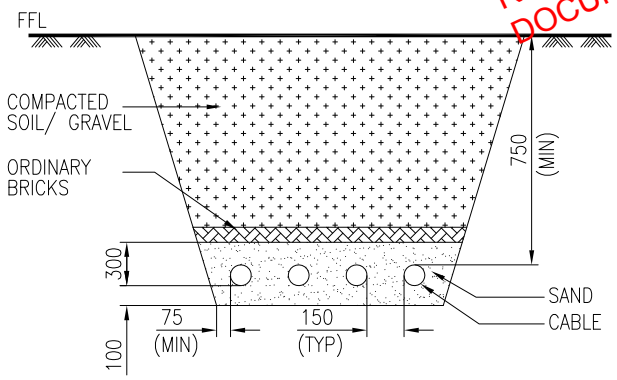

SECTION Z–Z
TYPICAL SECTION OF CABLE TRENCH

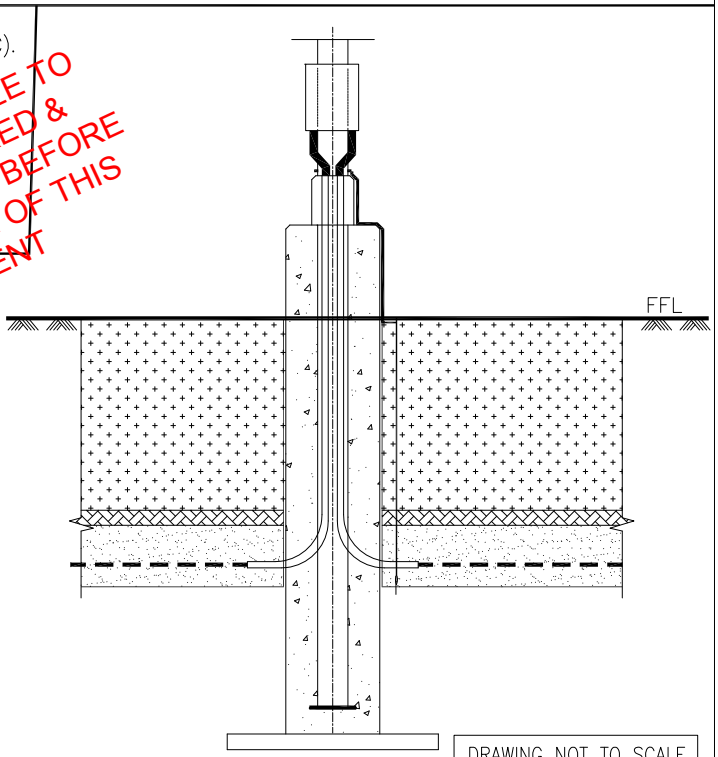

VIEW–X

DRAWING NOT TO SCALE

NOTES
1) ALL DIMENSIONS ARE IN MM UNLESS NOTED OTHERWISE.
2) RIVER SAND SHALL BE SIEVED & FREE FROM STONES.
3) APPROVAL SHALL BE OBTAINED FROM SITE ENGINEER BEFORE SAND FILLING AND PROCEEDING FOR BRICK INSTALLATION/BACKFILLING.
4) EARTHING CABLE/STRIP CAN BE LAID ALONG WITH STREET LIGHTING CABLES.
5) SPACING SHOWN IS INDICATIVE ONLY. ACTUAL SPACING SHALL BE DECIDED DURING ENGINEERING CONSIDERING NO. OF CABLES, DE–RATING FACTOR ETC.

Code	Contract No.	Document ID	Part	Rev.
		PIN–LEP–ELT–4001		00

Rev.	Date	Name (Drawn/Prepared)	Date	Name (Checked)	Date	Name (Approved)	Description	Acc. Code	Cat. Code	Acc. Code	Status
00	19.07.2017	KRP	19.07.2017	RPM	19.07.2017	RPM	ISSUED AS STANDARD				

BAR–Code

Store Location: Server/Share
Store Location: Folder
Store Name PCLB2

Pro. Unit	TON	Group	Type of Document	Sheet
				1 / 1

Con. Unit	Scale	Order No.
	NTS	

thyssenkrupp

	Date	Name
Drawn	19.07.2017	KRP
Prepared	19.07.2017	MLD
Checked	19.07.2017	RPM
Approved	19.07.2017	RPM

Description
INSTALLATION STANDARDS – POWER
TYPICAL DETAILS FOR DIRECTLY BURIED CABLES (STREET LIGHTING)
(PCLB2)

ISO A4

© thyssenkrupp Industrial Solutions (India) Private Limited 2017. All rights reserved

UH_BO_ISO_A4_P_E_tktIndia.dwg / AG03_UH_BO_ISO_A4_P.dwg / 14.12.2016

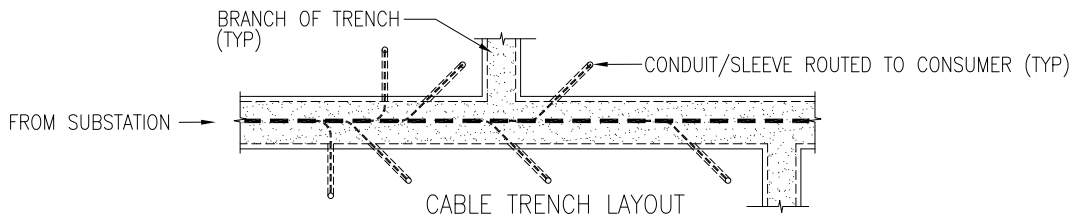

CABLE TRENCH LAYOUT
(PLAN)

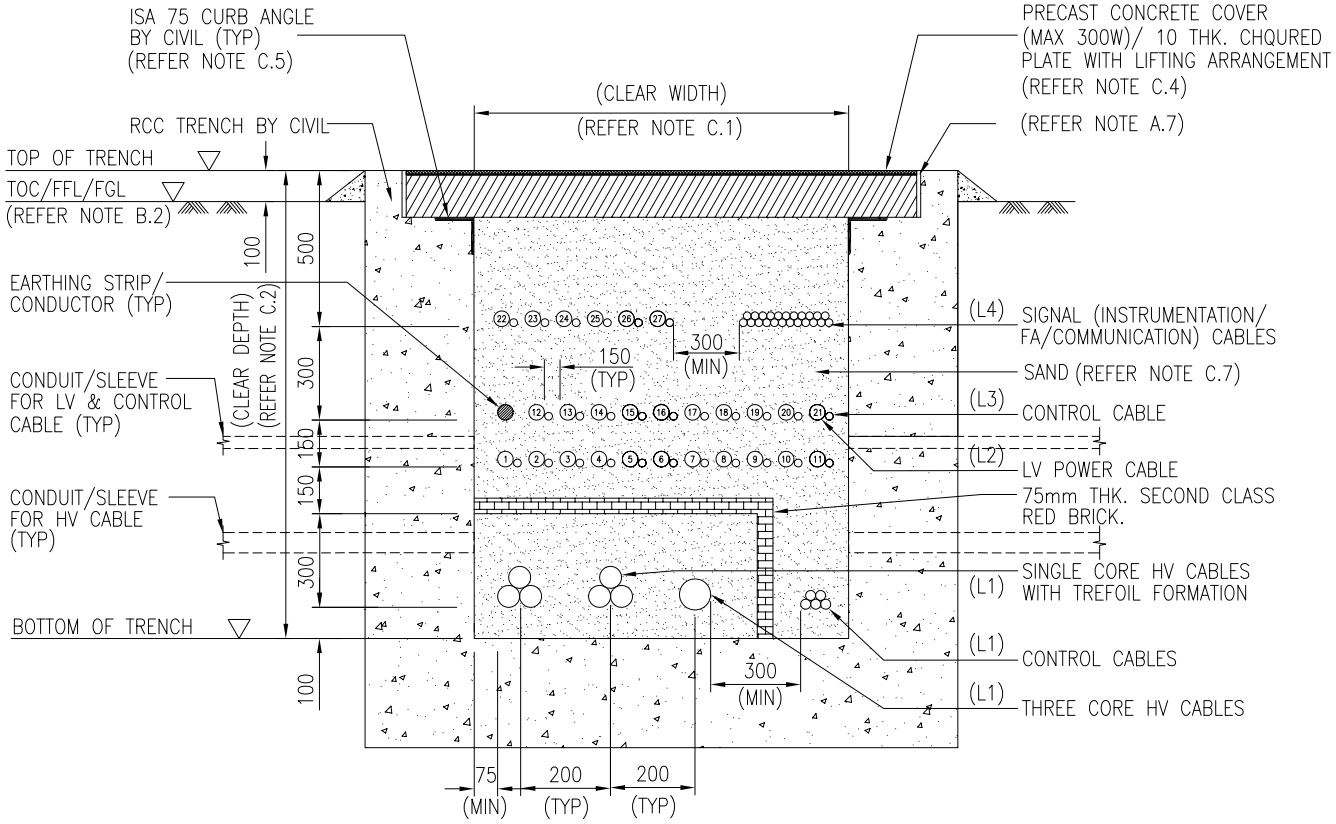

TYPICAL TRENCH SECTION

SEQUENCE OF LAYERS	
(L1) LAYER-1	HV CABLES LAYER & ASSOCIATED CONTROL CABLES
(L2) LAYER-2	LV CABLES 1ST LAYER
(L3) LAYER-3	LV CABLES 2ND LAYER
(L4) LAYER-4	SIGNAL CABLES (MULTI-LAYER) & LV CABLES 3RD LAYER WITH SPACING

DRAWING NOT TO SCALE

FOR RELEVANT NOTES, REFER SHEET 2 OF 2.

Code	Contract No.	Document ID	Part	Rev.
		PIN-LEP-ELT-4001		00

Rev.	Date	Name (Drawn/Prepared)	Date	Name (Checked)	Date	Name (Approved)	Description	Acc. Code	Cat. Code	Acc. Code	Status
00	19.07.2017	KRP	19.07.2017	MLD	19.07.2017	RPM	ISSUED AS STANDARD				

BAR-Code

Store Location: Server/Share

Store Location: Folder

Store Name PCLT1

Pro. Unit	TON	Group	Type of Document	Sheet
				1 / 2

Con. Unit	Scale	Order No.
	NTS	

thyssenkrupp

	Date	Name
Drawn	19.07.2017	KRP
Prepared	19.07.2017	MLD
Checked	19.07.2017	RPM
Approved	19.07.2017	RPM

Description
INSTALLATION STANDARDS – POWER
TYPICAL DETAILS FOR CABLES LAID
IN SAND FILLED BUILT-UP TRENCHES
(PCLT1)

ISO A4

© thyssenkrupp Industrial Solutions (India) Private Limited 2017. All rights reserved

UH_BO_ISO_A4_P_E_tktSIndia.dwg / AG03_UH_BO_ISO_A4_P.dwg / 14.12.2016

A) INSTALLATION NOTES:

1) ALL DIMENSIONS ARE IN MM UNLESS NOTED OTHERWISE.
2) RIVER SAND SHALL BE SIEVED & FREE FROM STONES.
3) APPROVAL SHALL BE OBTAINED FROM SITE ENGINEER BEFORE SAND FILLING AND PROCEEDING FOR SUBSEQUENT LAYER OF CABLES.
4) EARTHING CABLE/STRIP CAN BE INSTALLED IN ANY OF THE LAYER. LAYER WITH LV CABLES IS PREFERRED.
5) CERAMIC TILES/BRICKS SHALL BE OF APPROPRIATE VOLTAGE GRADE.
6) ALL THE TRENCH OPENINGS/PIPE SLEEVES SHALL BE EFFECTIVELY SEALED AFTER CABLE LAYING IN ORDER TO AVOID INGRESS OF WATER.
7) THE REMOVABLE CONCRETE COVERS SHALL BE SEALED WITH MASTIC ASPHALT FILLER/BITUMEN TO PREVENT INGRESS OF WATER/ HYDROCARBONS IN CABLE TRENCH.

B) ENGINEERING NOTES:

1) HORIZONTAL SPACING SHOWN BETWEEN SIMILAR VOLTAGE GRADE CABLES (HV–HV, LV–LV) IS INDICATIVE ONLY. ACTUAL SPACING SHALL BE DECIDED DURING ENGINEERING CONSIDERING GROUPING OF CABLES, DE–RATING FACTOR ETC.
2) TOP OF TRENCH SHALL BE 100mm ABOVE FINISHED GRADE LEVEL (FGL) IN CASE OF UNPAVED AREAS AND SHALL BE FLUSHED WITH FINISHED FLOOR LEVEL/TOP OF CONCRETE (FFL/TOC) IN CASE OF PAVED AREAS.

C) NOTES FOR CIVIL COORDINATION

1) GENERALLY, CLEAR WIDTH OF TRENCH SHALL BE RESTRICTED TO 1500MM. FOR WIDER/LARGE WIDTHS, MULTIPLE TRENCHES WITH RCC PARTITIONS SHALL BE DESIGNED.
2) CLEAR DEPTH OF TRENCH SHALL BE DECIDED BASED ON NO. OF CABLE LAYERS, WATER TABLE, CABLE ROUTING LAYOUT, UNDERGROUND COORDINATION ETC. ALSO, CIVIL SHALL BE CONSULTED BEFORE FINALIZATION OF TRENCH (CLEAR) DIMENSIONS.
3) SCOPE MATRIX SHALL BE FINALIZED WITH CIVIL (PROJECT SPECIFIC). SAMPLE IS INDICATED BELOW.

ACTIVITY DESCRIPTION	BY
CLEAR DEPTH & WIDTH OF TRENCH	EL
TRENCH DESIGN	CI
SUPPLY OF SAND, BRICKS/TILES, PRECAST CONCRETE COVERS, CHEQUERED PLATES WITH LIFTING ARRANGEMENT, SLEEVES, SEALING MATERIAL REQUIRED AT SLEEVE OPENINGS, TRENCH COVERS ETC.	CI
INSTALLATION OF SAND, BRICKS/TILES AND CABLES	EL
INSTALLATION OF PRECAST CONCRETE COVERS AND CHEQUERED PLATES, SLEEVES, SEALING MATERIAL REQUIRED AT SLEEVE OPENINGS, TRENCH COVERS ETC.	CI

4) IN CERTAIN AREAS (E.G. SUBSTATION), 10mm THICK CHEQERED PLATES (BY CIVIL) WITH LIFTING ARRANGEMENT CAN BE USED. IT SHALL BE DECIDED DURING ENGINEERING CONSIDERING LOCATION OF TRENCH, VEHICLE MOVEMENT ETC.
5) CURB ANGLE SHALL BE PROVIDED BY CIVIL ALONG THE LENGTH OF TRENCH. IT IS REQUIRED WHEREVER INSTALLATION OF CHEQUERED PLATES (AS COVER) IS ENVISAGED.
6) DUE CONSIDERATION SHALL BE GIVEN TO VEHICLE/FORK LIFT MOVEMENT WHILE DECIDING TRENCH LOCATION. CIVIL SHALL DESIGN THE TRENCH, TRENCH COVER ACCORDINGLY.
7) THERMAL RESISTIVITY OF SAND SHALL BE OF KNOWN VALUE. RECOMMENDED VALUE SHALL BE CORRESPONDING TO DE–RATING FACTOR OF 1 OR HIGHER. SAME SHALL BE INFORMED TO CIVIL/EL CONTRACTOR DEPENDING ON SCOPE OF SUPPLY.

NOTE B) & C) TO BE REFERRED & REMOVED BEFORE RELEASE OF THIS DOCUMENT. ALSO REFERENCE OF NOTES B) & C) TO BE REMOVED FROM SHEET 1 OF 2

Code	Contract No.	Document ID	Part	Rev.
		PIN–LEP–ELT–4001		00

Rev.	Date	Name (Drawn/Prepared)	Date	Name (Checked)	Date	Name (Approved)	Description	Acc. Code	Cat. Code	Acc. Code	Status
00	19.07.2017	KRP	19.07.2017	MLD	19.07.2017	RPM	ISSUED AS STANDARD				

BAR–Code

Store Location: Server/Share

Store Location: Folder

Store Name PCLT1

Pro. Unit	TON	Group	Type of Document	Sheet
				2 / 2

Con. Unit	Scale	Order No.
	NTS	

thyssenkrupp

	Date	Name
Drawn	19.07.2017	KRP
Prepared	19.07.2017	MLD
Checked	19.07.2017	RPM
Approved	19.07.2017	RPM

Description
INSTALLATION STANDARDS – POWER TYPICAL DETAILS FOR CABLES LAID IN SAND FILLED BUILT–UP TRENCHES (PCLT1)

ISO A4

© thyssenkrupp Industrial Solutions (India) Private Limited 2017. All rights reserved

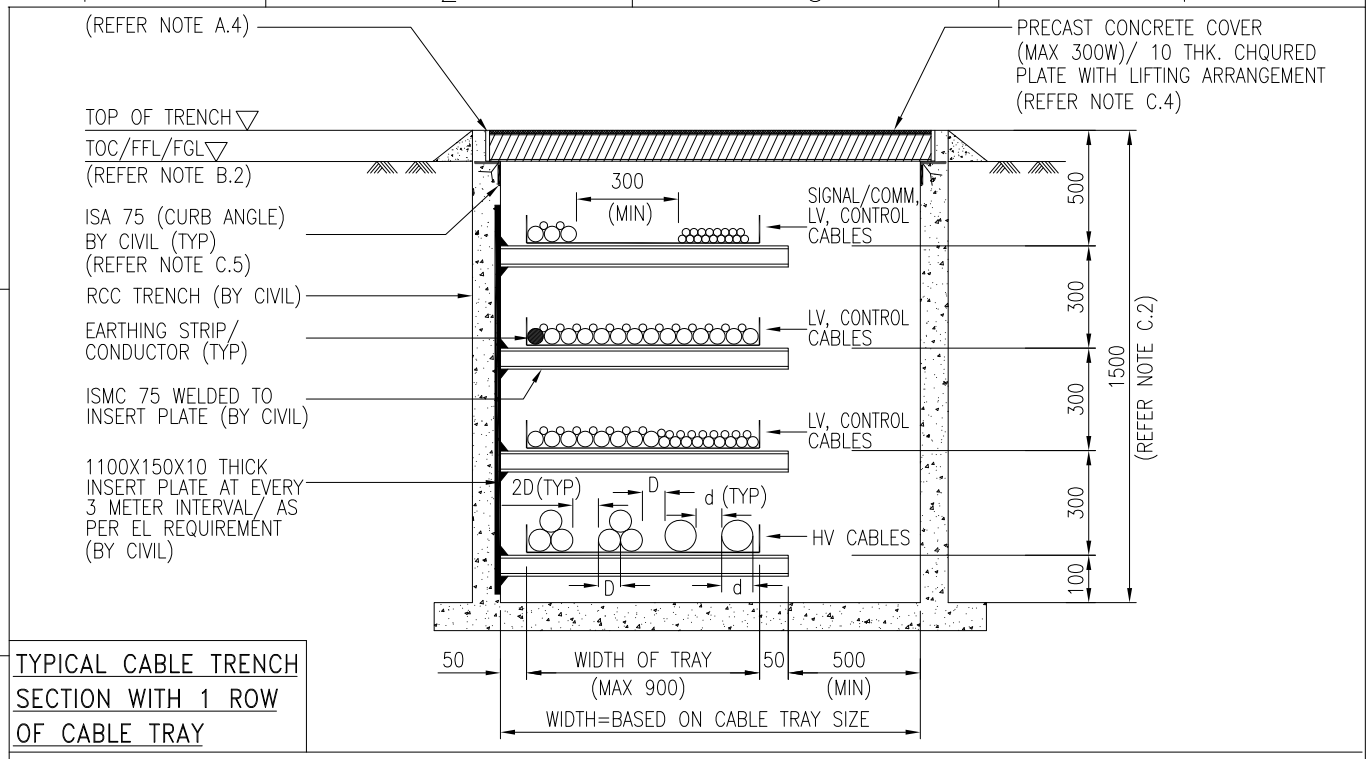

TYPICAL CABLE TRENCH SECTION WITH 1 ROW OF CABLE TRAY

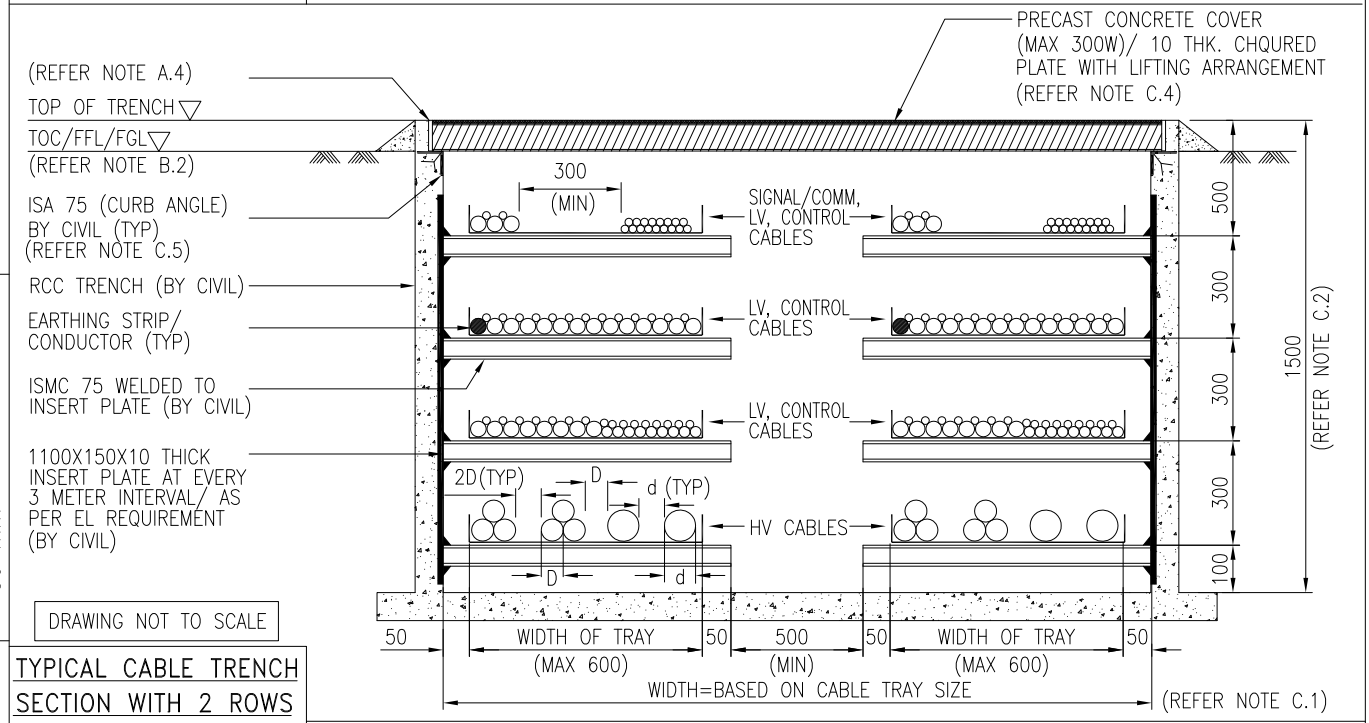

DRAWING NOT TO SCALE

TYPICAL CABLE TRENCH SECTION WITH 2 ROWS OF CABLE TRAYS

FOR RELEVANT NOTES & PLAN VIEW, REFER SHEET 2 OF 2.

Code	Contract No.	Document ID	Part	Rev.
		PIN-LEP-ELT-4001		00

Rev.	Date	Name (Drawn/Prepared)	Date	Name (Checked)	Date	Name (Approved)	Description	Acc. Code	Cat. Code	Acc. Code	Status
00	19.07.2017	KRP	19.07.2017	RPM	19.07.2017	RPM	ISSUED AS STANDARD				

BAR-Code

Store Location: Server/Share

Store Location: Folder

Store Name PCLT2

Pro. Unit	TON	Group	Type of Document	Sheet
				1 / 2

Con. Unit	Scale	Order No.
	NTS	

thyssenkrupp

	Date	Name
Drawn	19.07.2017	KRP
Prepared	19.07.2017	MLD
Checked	19.07.2017	RPM
Approved	19.07.2017	RPM

Description
INSTALLATION STANDARDS – POWER
TYPICAL DETAILS FOR CABLES LAID IN BUILT-UP TRENCHES WITH CABLE TRAY (PCLT2)

ISO A4

UH_BO_ISO_A4_P_E_tktSIndia.dwg / AG03_UH_BO_ISO_A4_P.dwg / 14.12.2016

© thyssenkrupp Industrial Solutions (India) Private Limited 2017. All rights reserved

UH_BO_ISO_A4_P_E_tktSIndia.dwg / AG03_UH_BO_ISO_A4_P.dwg / 14.12.2016

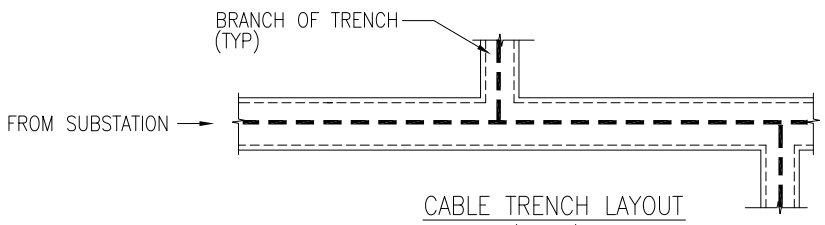

CABLE TRENCH LAYOUT
(PLAN)

FOR SECTIONAL VIEWS, REFER SHEET 1 OF 2.

A) INSTALLATION NOTES:

1) ALL DIMENSIONS ARE IN MM UNLESS NOTED OTHERWISE.
2) EARTHING CABLE/STRIP CAN BE INSTALLED IN ANY OF THE CABLE TRAY. TIER WITH LV CABLES IS PREFERRED.
3) ALL THE TRENCH OPENINGS/PIPE SLEEVES SHALL BE EFFECTIVELY SEALED AFTER CABLE LAYING IN ORDER TO AVOID INGRESS OF WATER.
4) THE REMOVABLE CONCRETE COVERS SHALL BE SEALED WITH MASTIC ASPHALT FILLER/BITUMEN TO PREVENT INGRESS OF WATER/ HYDROCARBONS IN CABLE TRENCH.

B) ENGINEERING NOTES:

1) HORIZONTAL SPACING SHOWN BETWEEN SIMILAR VOLTAGE GRADE CABLES (HV–HV, LV–LV) IS INDICATIVE ONLY. ACTUAL SPACING SHALL BE DECIDED DURING ENGINEERING CONSIDERING GROUPING OF CABLES, DE–RATING FACTOR ETC.
2) TOP OF TRENCH SHALL BE 100mm ABOVE FINISHED GRADE LEVEL (FGL) IN CASE OF UNPAVED AREAS AND SHALL BE FLUSHED WITH FINISHED FLOOR LEVEL/TOP OF CONCRETE (FFL/TOC) IN CASE OF PAVED AREAS.

C) NOTES FOR CIVIL COORDINATION

1) GENERALLY, CLEAR WIDTH OF TRENCH SHALL BE RESTRICTED TO 1500MM. FOR TWO ROWS OF CABLE TRAYS, CLEAR WIDTH SHALL BE RESTRICTED TO 2000MM. FOR WIDER/LARGE WIDTHS, MULTIPLE TRENCHES WITH RCC PARTITIONS SHALL BE DESIGNED.
2) CLEAR DEPTH OF TRENCH SHALL BE DECIDED BASED ON NO. OF CABLE LAYERS, WATER TABLE, CABLE ROUTING LAYOUT, UNDERGROUND COORDINATION ETC. ALSO, CIVIL SHALL BE CONSULTED BEFORE FINALIZATION OF TRENCH (CLEAR) DIMENSIONS.
3) SCOPE MATRIX SHALL BE FINALIZED WITH CIVIL (PROJECT SPECIFIC). SAMPLE IS INDICATED BELOW.

ACTIVITY DESCRIPTION	BY
CLEAR DEPTH & WIDTH OF TRENCH	EL
TRENCH DESIGN	CI
SUPPLY & INSTALLATION OF INSERT PLATES, TRAY SUPPORTS, PRECAST CONCRETE COVERS/ CHEQUERED PLATES, SLEEVES, SEALING MATERIAL REQUIRED AT SLEEVES OPENINGS, TRENCH COVERS ETC.	CI
INSTALLATION OF TRAYS, CABLES	EL

4) IN CERTAIN AREAS (E.G. SUBSTATION), 10mm THICK CHEQERED PLATES (BY CIVIL) WITH LIFTING ARRANGEMENT CAN BE USED. IT SHALL BE DECIDED DURING ENGINEERING CONSIDERING LOCATION OF TRENCH, VEHICLE MOVEMENT ETC.
5) CURB ANGLE SHALL BE PROVIDED BY CIVIL ALONG THE LENGTH OF TRENCH. IT IS REQUIRED FOR FOLLOWING PURPOSES:
   1) WHEREVER INSTALLATION OF CHEQUERED PLATES (AS COVER) IS ENVISAGED.
   2) WHEREVER PANEL FRAME INSTALLATION IS ENVISAGED. IN THIS CASE, SIZE OF CURB ANGLE SHALL BE MODIFIED SUITABLY.
6) DUE CONSIDERATION SHALL BE GIVEN TO VEHICLE/FORK LIFT MOVEMENT WHILE DECIDING TRENCH LOCATION. CIVIL SHALL DESIGN THE TRENCH, TRENCH COVER ACCORDINGLY.

NOTE B) & C) TO BE REFERRED & REMOVED BEFORE RELEASE OF THIS DOCUMENT. ALSO REFERENCE OF NOTES B) & C) TO BE REMOVED FROM SHEET 1 OF 2

Code	Contract No.	Document ID	Part	Rev.
		PIN–LEP–ELT–4001		00

Rev.	Date	Name (Drawn/Prepared)	Date	Name (Checked)	Date	Name (Approved)	Description	Acc. Code	Cat. Code	Acc. Code	Status
00	19.07.2017	KRP MLD	19.07.2017	RPM	19.07.2017	RPM	ISSUED AS STANDARD				

BAR–Code

Store Location: Server/Share

Store Location: Folder

Store Name PCLT2

Pro. Unit	TON	Group	Type of Document	Sheet
				2 / 2

Con. Unit	Scale	Order No.
	NTS	

thyssenkrupp

	Date	Name
Drawn	19.07.2017	KRP
Prepared	19.07.2017	MLD
Checked	19.07.2017	RPM
Approved	19.07.2017	RPM

Description
INSTALLATION STANDARDS – POWER
TYPICAL DETAILS FOR CABLES LAID
IN BUILT–UP TRENCHES WITH CABLE TRAY
(PCLT2)

ISO A4

© thyssenkrupp Industrial Solutions (India) Private Limited 2017. All rights reserved

ITEM	DESCRIPTION	MATERIAL	QTY.	SUPPLY BY	INSTALLATION BY
1	80 x 80 x10 THK PLATE	CAST IRON	1 NO.	ELECTRICAL CONTRACTOR	ELECTRICAL CONTRACTOR
2	250 x 80 x10 THK PLATE	CAST IRON	1 NO.	ELECTRICAL CONTRACTOR	ELECTRICAL CONTRACTOR
3	ISA 75 (75X75X6mm)	CAST IRON	1 METER	ELECTRICAL CONTRACTOR	ELECTRICAL CONTRACTOR
4	HEXAGONAL HEAD BOLT M10 X 30mm LONG, THREADS UPTO HEAD, WITH SUITABLE NUTS & WASHERS (REFER NOTE-3)	H.D.G.I.	4 SETS	ELECTRICAL CONTRACTOR	ELECTRICAL CONTRACTOR
5	100 x 100 x 6 THK PLATE	CAST IRON	1 NO.	ELECTRICAL CONTRACTOR	ELECTRICAL CONTRACTOR
6	CONCRETE BLOCK	CONCRETE (GRADE M20)	AS REQUIRED	ELECTRICAL CONTRACTOR	ELECTRICAL CONTRACTOR

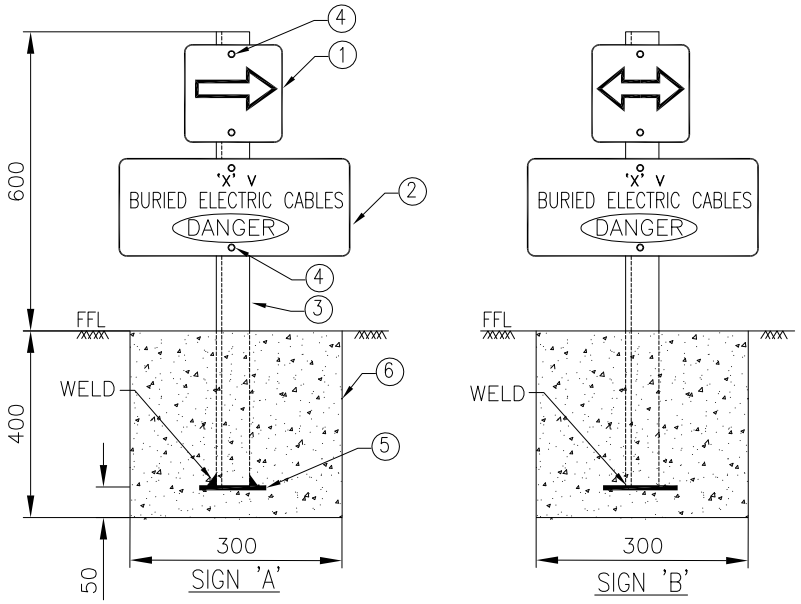

DRAWING NOT TO SCALE

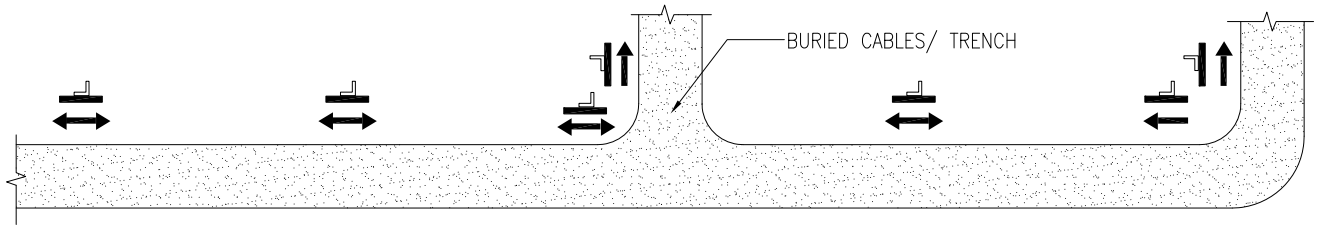

SIGN 'B' AT STRAIGHT RUN | SIGN 'B' AT STRAIGHT RUN | SIGN 'A' & 'B' AT INTERSECTION | SIGN 'B' AT STRAIGHT RUN | SIGN 'A' AT TURNING

NOTES

1) ALL DIMENSIONS ARE IN 'mm' UNLESS OTHERWISE SPECIFIED.
2) STEEL SECTIONS SHALL BE PREFABRICATED & PAINTED BEFORE INSTALLATION. AREA AFFECTED DUE TO SITE WELDING SHALL BE CLEANED AND PAINTED.
3) THESE DETAILS SHALL BE VERIFIED WITH ORDERED EQUIPMENT DRAWING.
4) LETTERING & SYMBOLS SHALL BE EMBOSSED ON THE PLATE. THE PLATE SHALL BE PAINTED YELLOW. THE LETTERS & SYMBOLS SHALL BE PAINTED IN RED. ALSO, 'X' (VOLTAGE GRADE OF THE CABLE) SHALL BE INDICATED APPROPRIATELY.
5) CABLE MARKER SHALL BE PROVIDED EVERY 30 METERS (AS PER OISD-147)/ 200 METERS (AS PER IS-1255) AND AT POINTS OF TURNING, INTERSECTION & CABLE JOINT.

Code	Contract No.	Document ID	Part	Rev.
		PIN-LEP-ELT-4001		00

Rev.	Date	Name (Drawn/Prepared)	Date	Name (Checked)	Date	Name (Approved)	Description	Acc. Code	Cat. Code	Acc. Code	Status
00	19.07.2017	KRP MLD	19.07.2017	RPM	19.07.2017	RPM	ISSUED AS STANDARD				

BAR-Code

Store Location: Server/Share

Store Location: Folder

Store Name PCMG1

Pro. Unit	TON	Group	Type of Document	Sheet
				1 / 1

Con. Unit	Scale	Order No.
	NTS	

thyssenkrupp

	Date	Name
Drawn	19.07.2017	KRP
Prepared	19.07.2017	MLD
Checked	19.07.2017	RPM
Approved	19.07.2017	RPM

Description
INSTALLATION STANDARDS – POWER CABLE MARKER (PCMG1)

ISO A4

UH_BO_ISO_A4_P_E_tktSIndia.dwg / AG03_UH_BO_ISO_A4_P.dwg / 14.12.2016

© thyssenkrupp Industrial Solutions (India) Private Limited 2017. All rights reserved

UH_BO_ISO_A4_P_E_tktSIndia.dwg / AG03_UH_BO_ISO_A4_P.dwg / 14.12.2016

ITEM	DESCRIPTION	MATERIAL	QTY.	SUPPLY BY	INSTALLATION BY
1	LOCAL CONTROL STATION	PROJ. SPEC.	1 NO.	CLIENT	ELECTRICAL CONTRACTOR
2	ANCHOR FASTENER M8 x 60mm LONG WITH SUITABLE NUT & WASHER	GALVANISED STEEL / SS	4 SETS	ELECTRICAL CONTRACTOR	ELECTRICAL CONTRACTOR
3	ISMC 75	M.S. PAINTED	AS REQUIRED	(REFER NOTE-3 & 4)	
4	HEXAGONAL HEAD BOLT M10 X 30mm LONG, THREADS UPTO HEAD, WITH SUITABLE NUTS & WASHERS (REFER NOTE-3)	H.D.G.I.	4 SETS	ELECTRICAL CONTRACTOR	ELECTRICAL CONTRACTOR
5	SADDLE WITH BASE STRIP & ACCESSORIES (M6 SCREWS, WASHERS WASHERS, PLASTIC ANCHORS ETC.)	H.D.G.I.	AS REQUIRED	ELECTRICAL CONTRACTOR	ELECTRICAL CONTRACTOR
6	CANOPY COVERED FROM 3 SIDES (REFER NOTE-5)	PROJ SPEC.	1 NO.	ELECTRICAL CONTRACTOR	ELECTRICAL CONTRACTOR
7	HEXAGONAL HEAD BOLT M6 X 25mm LONG, THREADS UPTO HEAD, WITH SUITABLE NUTS & WASHERS (FOR CANOPY FIXING)	H.D.G.I.	4 SETS	ELECTRICAL CONTRACTOR	ELECTRICAL CONTRACTOR

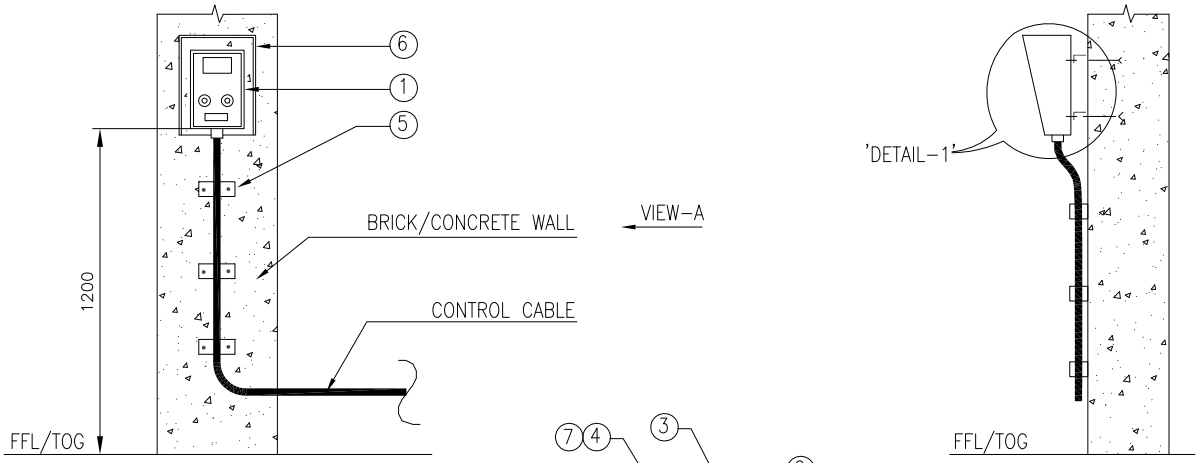

FRONT VIEW

VIEW-A

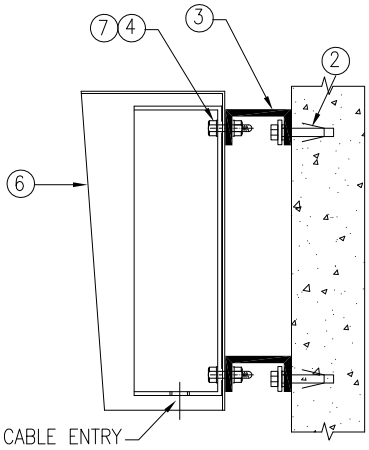

DETAIL-1

DRAWING NOT TO SCALE

NOTES

1) ALL DIMENSION ARE IN 'mm' UNLESS OTHERWISE STATED.
2) STEEL SECTIONS SHALL BE PREFABRICATED & PAINTED BEFORE INSTALLATION.
3) THESE DETAILS SHALL BE VERIFIED WITH ORDERED EQUIPMENT DRAWING.
4) SUPPLY & INSTALLATION OF STEEL IS NOT PART OF THIS INSTALLATION ARRANGEMENT. SAME IS COVERED ELSEWHERE.
5) CANOPY COVERED FROM 3 SIDES SHALL BE PROVIDED FOR LOCAL CONTROL STATION INSTALLED OUTDOOR.

Code	Contract No.	Document ID	Part	Rev.
		PIN-LEP-ELT-4001		00

Rev.	Date	Name (Drawn/Prepared)	Date	Name (Checked)	Date	Name (Approved)	Description	Acc. Code	Cat. Code	Acc. Code	Status
00	19.07.2017	KRP	19.07.2017	MLD	19.07.2017	RPM	ISSUED AS STANDARD				

BAR-Code

Store Location: Server/Share

Store Location: Folder

Store Name PCSC1

Pro. Unit	TON	Group	Type of Document	Sheet
				1 / 1

Con. Unit	Scale	Order No.
	NTS	

thyssenkrupp

	Date	Name
Drawn	19.07.2017	KRP
Prepared	19.07.2017	MLD
Checked	19.07.2017	RPM
Approved	19.07.2017	RPM

Description

INSTALLATION STANDARDS – POWER LOCAL CONTROL STATION ON BRICK/CONCRETE WALL (PCSC1)

ISO A4

© thyssenkrupp Industrial Solutions (India) Private Limited 2017. All rights reserved

ITEM	DESCRIPTION	MATERIAL	QTY.	SUPPLY BY	INSTALLATION BY
1	LOCAL CONTROL STATION	PROJ. SPEC.	1 NO.	CLIENT	ELECTRICAL CONTRACTOR
2	ISMC 100	M.S. PAINTED	AS REQUIRED	REFER NOTE-4	
3	150 x 150 x10 THK PLATE	M.S. PAINTED	1 NO.	REFER NOTE-4	
4	25 x 3mm THK. FLAT	M.S. PAINTED	1 METER	REFER NOTE-3 & 4	
5	HEXAGONAL HEAD BOLT M10 X 30mm LONG, THREADS UPTO HEAD, WITH SUITABLE NUTS & WASHERS (REFER NOTE-3)	H.D.G.I.	4 SETS	ELECTRICAL CONTRACTOR	ELECTRICAL CONTRACTOR
6	ANCHOR FASTENER M10 x 75 LONG WITH SUITABLE NUT & WASHER	GALVANISED STEEL / SS	4 NOS.	ELECTRICAL CONTRACTOR	ELECTRICAL CONTRACTOR
7	CABLE TIE	PLASTIC	AS REQUIRED	ELECTRICAL CONTRACTOR	ELECTRICAL CONTRACTOR
8	EDGE PROTECTION FOR CABLE	RUBBER	1 NO.	ELECTRICAL CONTRACTOR	ELECTRICAL CONTRACTOR
9	200x200x100 (LxWxH)mm PEDESTAL	CONCRETE (GRADE M20)	AS REQUIRED	ELECTRICAL CONTRACTOR	ELECTRICAL CONTRACTOR
10	CANOPY COVERED FROM 3 SIDES (REFER NOTE-5)	PROJ. SPEC.	1 NO.	ELECTRICAL CONTRACTOR	ELECTRICAL CONTRACTOR
11	HEXAGONAL HEAD BOLT M6 X 25mm LONG, THREADS UPTO HEAD, WITH SUITABLE NUTS & WASHERS (FOR CANOPY FIXING)	H.D.G.I.	4 SETS	ELECTRICAL CONTRACTOR	ELECTRICAL CONTRACTOR

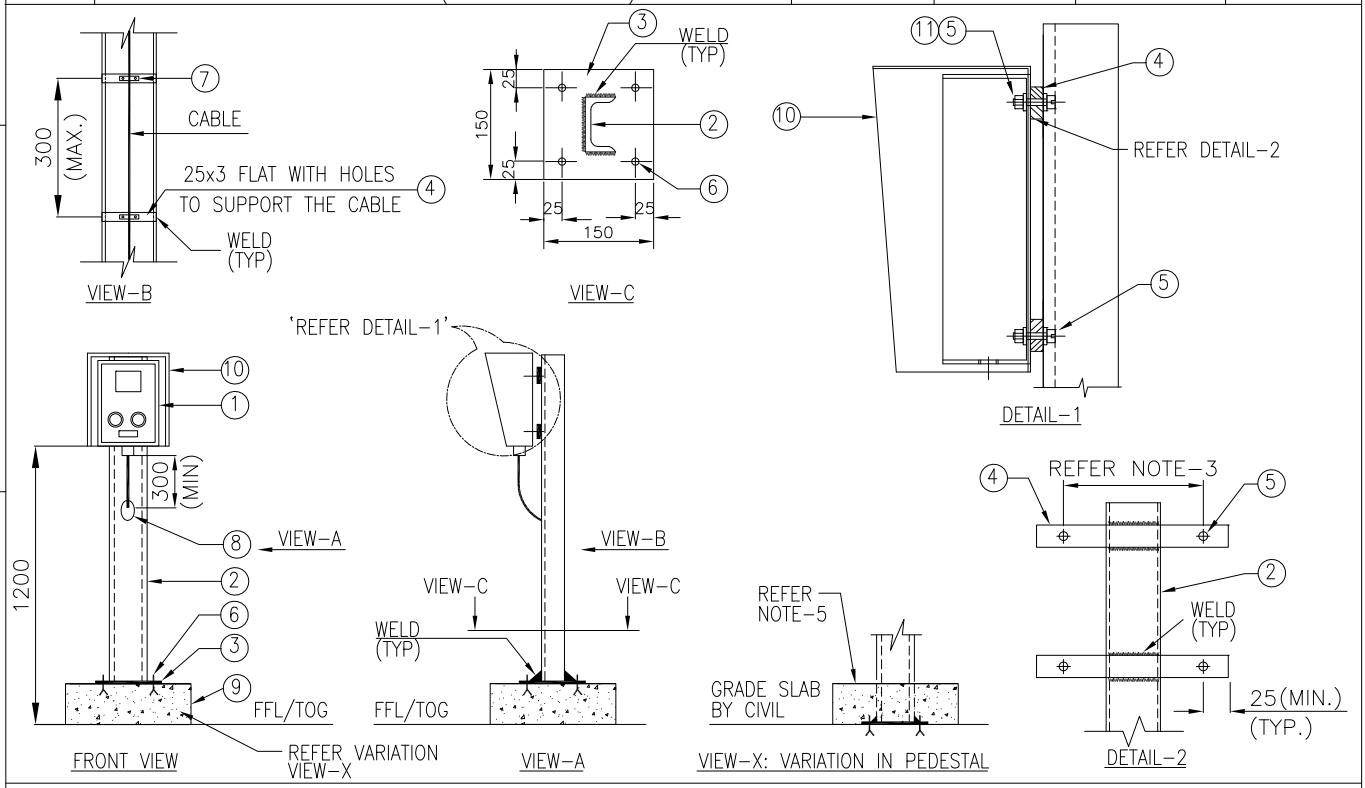

NOTES

1) ALL DIMENSION ARE IN 'mm' UNLESS OTHERWISE STATED.
2) STEEL SECTIONS SHALL BE PREFABRICATED & PAINTED BEFORE INSTALLATION. AREA AFFECTED DUE TO SITE WELDING SHALL BE CLEANED AND PAINTED.
3) THESE DETAILS SHALL BE VERIFIED WITH ORDERED EQUIPMENT DRAWING.
4) SUPPLY & INSTALLATION OF STEEL IS NOT PART OF THIS INSTALLATION ARRANGEMENT. SAME IS COVERED ELSEWHERE.
5) CANOPY COVERED FROM 3 SIDES SHALL BE PROVIDED FOR LOCAL CONTROL STATION INSTALLED OUTDOOR.
6) IN CASE OF ACID PROOF/BRICK LINING AREA, SUCH ARRANGEMENT SHALL BE FOLLOWED BY EL CONTRACTOR BEFORE START OF LINING WORK

DRAWING NOT TO SCALE

Code	Contract No.	Document ID	Part	Rev.
		PIN-LEP-ELT-4001		00

Rev.	Date	Name (Drawn/Prepared)	Date	Name (Checked)	Date	Name (Approved)	Description	Acc. Code	Cat. Code	Acc. Code	Status
00	19.07.2017	KRP	MLD	19.07.2017	RPM	19.07.2017	RPM	ISSUED AS STANDARD			

BAR-Code

Store Location: Server/Share

Store Location: Folder

Store Name PCSP1

Pro. Unit	TON	Group	Type of Document	Sheet
				1 / 1

Con. Unit	Scale	Order No.
	NTS	

thyssenkrupp

	Date	Name
Drawn	19.07.2017	KRP
Prepared	19.07.2017	MLD
Checked	19.07.2017	RPM
Approved	19.07.2017	RPM

Description
INSTALLATION STANDARDS – POWER LOCAL CONTROL STATION ON SELF-STANDING PEDESTAL (PCSP1)

ISO A4

UH_BO_ISO_A4_P_E_tktSIndia.dwg / AG03_UH_BO_ISO_A4_P.dwg / 14.12.2016

© thyssenkrupp Industrial Solutions (India) Private Limited 2017. All rights reserved

ITEM	DESCRIPTION	MATERIAL	QTY.	SUPPLY BY	INSTALLATION BY
1	LOCAL CONTROL STATION	PROJ. SPEC.	1 NO.	CLIENT	ELECTRICAL CONTRACTOR
2	ISMC 100	M.S. PAINTED	AS REQUIRED	REFER NOTE-4	
3	150 x 150 x10 THK PLATE	M.S. PAINTED	1 NO.	REFER NOTE-4	
4	25 x 3mm THK. FLAT	M.S. PAINTED	1 METER	REFER NOTE-3 & 4	
5	HEXAGONAL HEAD BOLT M10 X 30mm LONG, THREADS UPTO HEAD, WITH SUITABLE NUTS & WASHERS (REFER NOTE-3)	H.D.G.I.	4 SETS	ELECTRICAL CONTRACTOR	ELECTRICAL CONTRACTOR
6	CABLE TIE	PLASTIC	AS REQUIRED	ELECTRICAL CONTRACTOR	ELECTRICAL CONTRACTOR
7	EDGE PROTECTION FOR CABLE	RUBBER	1 NO.	ELECTRICAL CONTRACTOR	ELECTRICAL CONTRACTOR
8	CANOPY COVERED FROM 3 SIDES (REFER NOTE-5)	PROJ. SPEC.	1 NO.	ELECTRICAL CONTRACTOR	ELECTRICAL CONTRACTOR
9	HEXAGONAL HEAD BOLT M6 X 25mm LONG, THREADS UPTO HEAD, WITH SUITABLE NUTS & WASHERS (FOR CANOPY FIXING)	H.D.G.I.	4 SETS	ELECTRICAL CONTRACTOR	ELECTRICAL CONTRACTOR

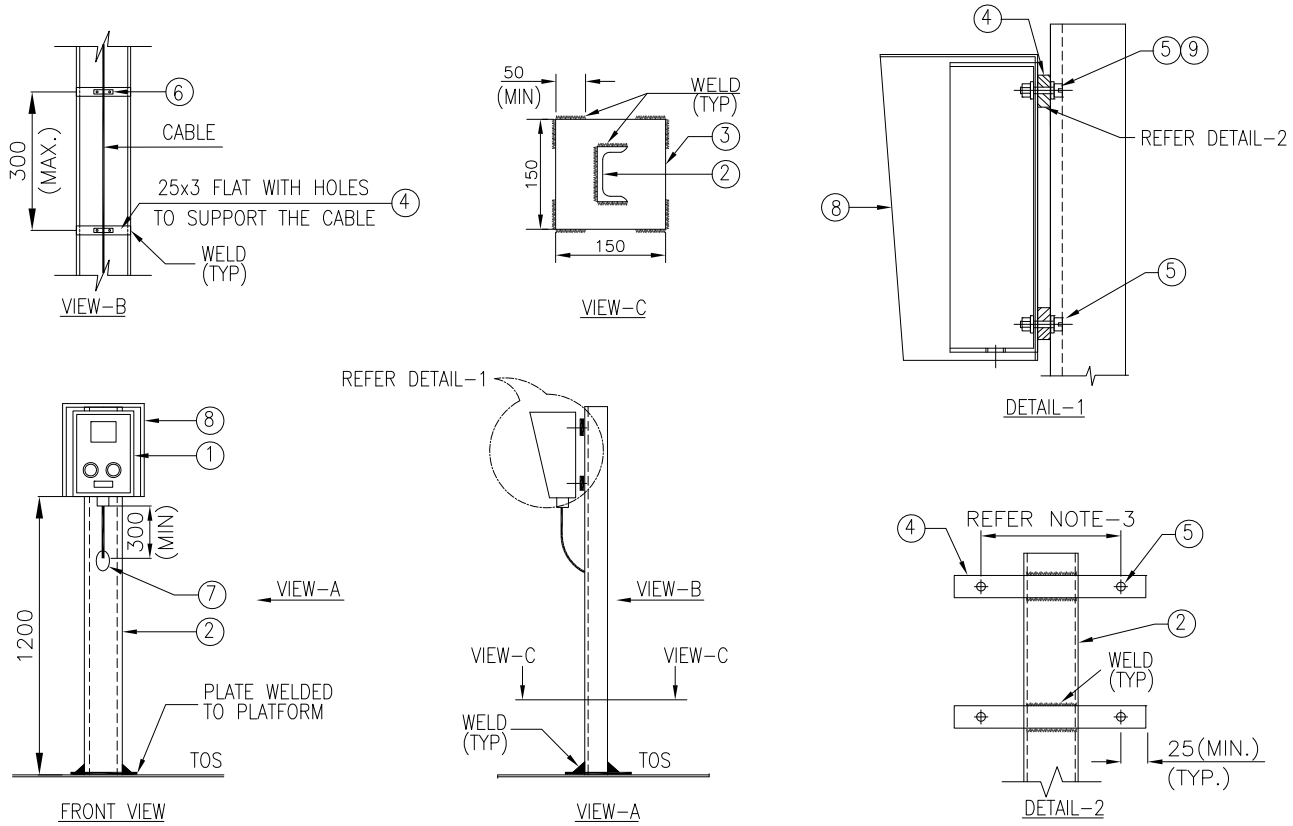

NOTES

1) ALL DIMENSION ARE IN 'mm' UNLESS OTHERWISE STATED.
2) STEEL SECTIONS SHALL BE PREFABRICATED & PAINTED BEFORE INSTALLATION. AREA AFFECTED DUE TO SITE WELDING SHALL BE CLEANED AND PAINTED.
3) THESE DETAILS SHALL BE VERIFIED WITH ORDERED EQUIPMENT DRAWING.
4) SUPPLY & INSTALLATION OF STEEL IS NOT PART OF THIS INSTALLATION ARRANGEMENT. SAME IS COVERED ELSEWHERE.
5) CANOPY COVERED FROM 3 SIDES SHALL BE PROVIDED FOR LOCAL CONTROL STATION INSTALLED OUTDOOR.

DRAWING NOT TO SCALE

Code	Contract No.	Document ID	Part	Rev.
		PIN-LEP-ELT-4001		00

Rev.	Date	Name (Drawn/Prepared)	Date	Name (Checked)	Date	Name (Approved)	Description	Acc. Code	Cat. Code	Acc. Code	Status
00	19.07.2017	KRP	MLD	19.07.2017	RPM	19.07.2017	RPM	ISSUED AS STANDARD			

BAR-Code

Store Location: Server/Share

Store Location: Folder

Store Name PCSP2

Pro. Unit	TON	Group	Type of Document	Sheet
				1 / 1

Con. Unit	Scale	Order No.
	NTS	

thyssenkrupp

	Date	Name
Drawn	19.07.2017	KRP
Prepared	19.07.2017	MLD
Checked	19.07.2017	RPM
Approved	19.07.2017	RPM

Description
INSTALLATION STANDARDS – POWER LOCAL CONTROL STATION ON STEEL PLATFORM/GRATING (PCSP2)

ISO A4

UH_BO_ISO_A4_P_E_tkSIndia.dwg / AG03_UH_BO_ISO_A4_P.dwg / 14.12.2016

© thyssenkrupp Industrial Solutions (India) Private Limited 2017. All rights reserved

ITEM	DESCRIPTION	MATERIAL	QTY.	SUPPLY BY	INSTALLATION BY
1	LOCAL CONTROL STATION	PROJ. SPEC.	1 NO.	CLIENT	ELECTRICAL CONTRACTOR
2	ISMC 100	M.S. PAINTED	AS REQUIRED	REFER NOTE-4	
3	150 x 150 x10 THK PLATE	M.S. PAINTED	1 NO.	REFER NOTE-4	
4	ANCHOR FASTENER M10 x 75mm LONG WITH SUITABLE NUT & WASHER	GALVANISED STEEL / SS	4 NOS.	ELECTRICAL CONTRACTOR	ELECTRICAL CONTRACTOR
5	25 x 3mm THK FLAT	M.S. PAINTED	1 METER	REFER NOTE-3 & 4	
6	HEXAGONAL HEAD BOLT M10 X 30mm LONG, THREADS UPTO HEAD, WITH SUITABLE NUTS & WASHERS (REFER NOTE-3)	H.D.G.I.	4 SETS	ELECTRICAL CONTRACTOR	ELECTRICAL CONTRACTOR
7	CABLE TIE	PLASTIC	AS REQUIRED	ELECTRICAL CONTRACTOR	ELECTRICAL CONTRACTOR
8	EDGE PROTECTION FOR CABLE	RUBBER	1 NO.	ELECTRICAL CONTRACTOR	ELECTRICAL CONTRACTOR
9	CANOPY COVERED FROM 3 SIDES (REFER NOTE-5)	PROJ. SPEC.	1 NO.	ELECTRICAL CONTRACTOR	ELECTRICAL CONTRACTOR
10	HEXAGONAL HEAD BOLT M6 X 25mm LONG, THREADS UPTO HEAD, WITH SUITABLE NUTS & WASHERS (FOR CANOPY FIXING)	H.D.G.I.	4 SETS	ELECTRICAL CONTRACTOR	ELECTRICAL CONTRACTOR

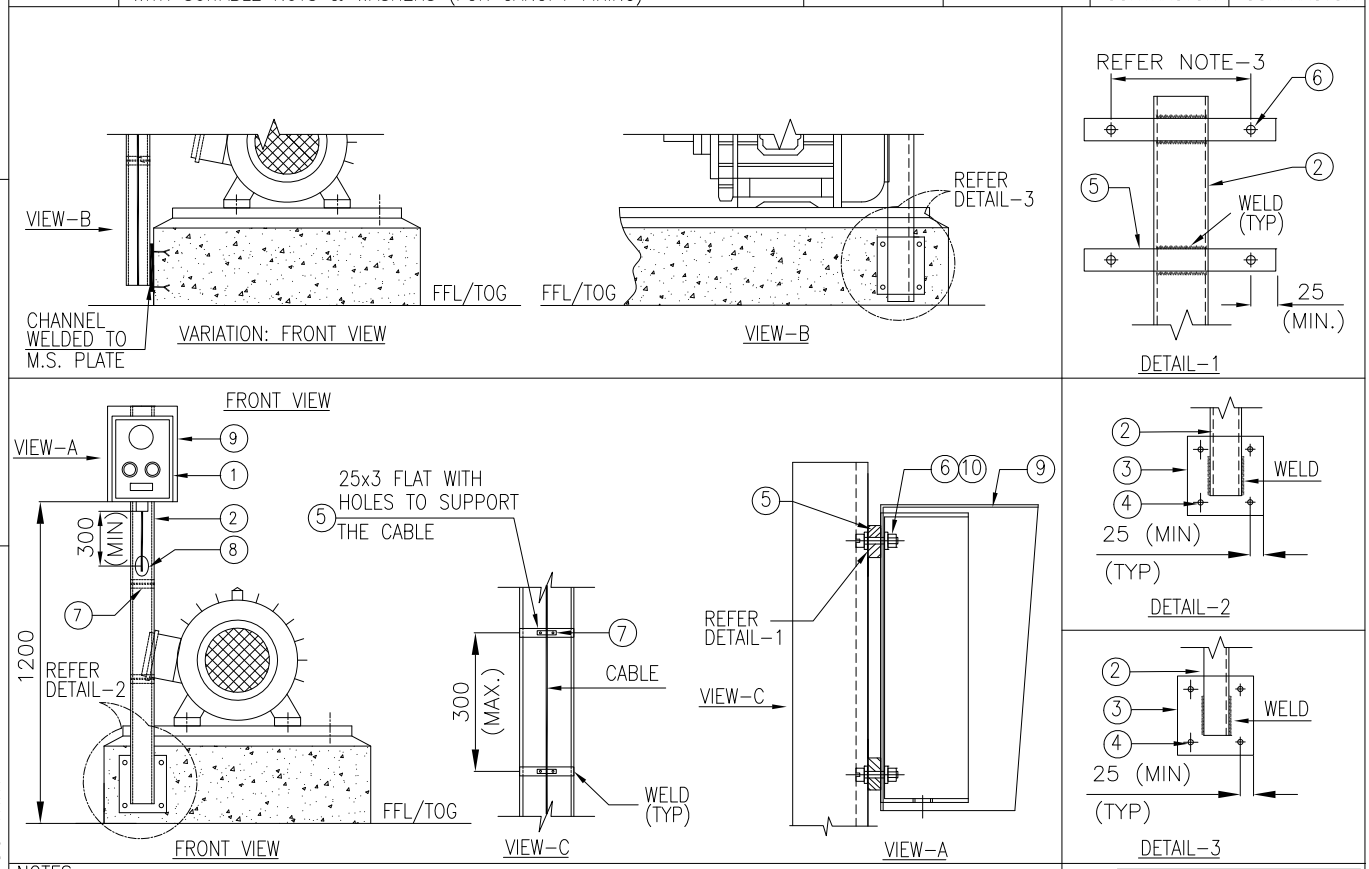

NOTES

1) ALL DIMENSIONS ARE IN 'mm' UNLESS OTHERWISE STATED.
2) STEEL SECTIONS SHALL BE PREFABRICATED & PAINTED BEFORE INSTALLATION. AREA AFFECTED DUE TO SITE WELDING SHALL BE CLEANED AND PAINTED.
3) THESE DETAILS SHALL BE VERIFIED WITH ORDERED EQUIPMENT DRAWING.
4) SUPPLY & INSTALLATION OF STEEL IS NOT PART OF THIS INSTALLATION ARRANGEMENT. SAME IS COVERED ELSEWHERE.
5) CANOPY COVERED FROM 3 SIDES SHALL BE PROVIDED FOR LOCAL CONTROL STATION INSTALLED OUTDOOR.

DRAWING NOT TO SCALE

Code	Contract No.	Document ID	Part	Rev.
		PIN-LEP-ELT-4001		00

Rev.	Date	Name (Drawn/Prepared)	Date	Name (Checked)	Date	Name (Approved)	Description	Acc. Code	Cat. Code	Acc. Code	Status
00	19.07.2017	KRP	MLD	19.07.2017	RPM	19.07.2017	RPM	ISSUED AS STANDARD			

BAR-Code

Store Location: Server/Share

Store Location: Folder

Store Name PCSP3

Pro. Unit	TON	Group	Type of Document	Sheet
				1 / 1

Con. Unit	Scale	Order No.
	NTS	

thyssenkrupp

	Date	Name
Drawn	19.07.2017	KRP
Prepared	19.07.2017	MLD
Checked	19.07.2017	RPM
Approved	19.07.2017	RPM

Description
INSTALLATION STANDARDS – POWER
LOCAL CONTROL STATION SUPPORTED
FROM MOTOR FOUNDATION
(PCSP3)

ISO A4

UH_BO_ISO_A4_P_E_tktSIndia.dwg / AG03_UH_BO_ISO_A4_P.dwg / 14.12.2016

© thyssenkrupp Industrial Solutions (India) Private Limited 2017. All rights reserved

ITEM	DESCRIPTION	MATERIAL	QTY.	SUPPLY BY	INSTALLATION BY
1	LOCAL CONTROL STATION	PROJ. SPEC.	1 NO.	CLIENT	ELECTRICAL CONTRACTOR
2	ISMC 75	M.S. PAINTED	AS REQUIRED	REFER NOTE-4	
3	25 x 3mm THK. FLAT	M.S. PAINTED	1.0 METER	REFER NOTE-3 & 4	
4	U BOLT M10 SIZE THREADED AT THE END SUITABLE FOR HANDRAIL PIPE WITH NUT & WASHERS.	H.D.G.I.	2 SETS	ELECTRICAL CONTRACTOR	ELECTRICAL CONTRACTOR
5	HEXAGONAL HEAD BOLT M10 X 30mm LONG, THREADS UPTO HEAD, WITH SUITABLE NUTS & WASHERS (REFER NOTE-3)	H.D.G.I.	6 SETS	ELECTRICAL CONTRACTOR	ELECTRICAL CONTRACTOR
6	CABLE TIE	PLASTIC	AS REQUIRED	ELECTRICAL CONTRACTOR	ELECTRICAL CONTRACTOR
7	EDGE PROTECTION FOR CABLE	RUBBER	1 NO.	ELECTRICAL CONTRACTOR	ELECTRICAL CONTRACTOR
8	CANOPY COVERED FROM 3 SIDES (REFER NOTE-5)	PROJ. SPEC.	1 NO.	ELECTRICAL CONTRACTOR	ELECTRICAL CONTRACTOR
9	HEXAGONAL HEAD BOLT M6 X 25mm LONG, THREADS UPTO HEAD, WITH SUITABLE NUTS & WASHERS (FOR CANOPY FIXING)	H.D.G.I.	4 SETS	ELECTRICAL CONTRACTOR	ELECTRICAL CONTRACTOR

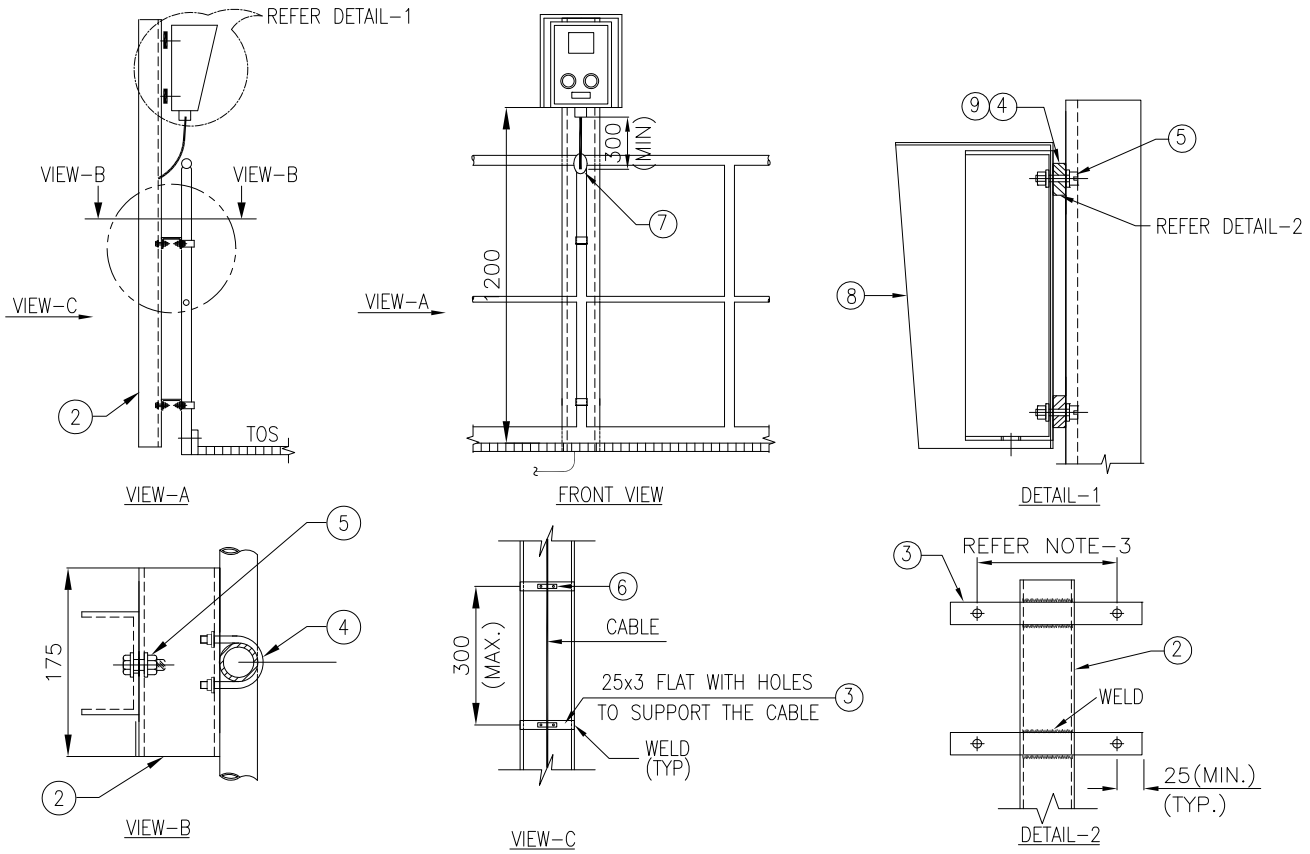

NOTES

1) ALL DIMENSION ARE IN 'mm' UNLESS OTHERWISE STATED.
2) STEEL SECTIONS SHALL BE PREFABRICATED & PAINTED BEFORE INSTALLATION. AREA AFFECTED DUE TO SITE WELDING SHALL BE CLEANED AND PAINTED.
3) THESE DETAILS SHALL BE VERIFIED WITH ORDERED EQUIPMENT DRAWING.
4) SUPPLY & INSTALLATION OF STEEL IS NOT PART OF THIS INSTALLATION ARRANGEMENT. SAME IS COVERED ELSEWHERE.
5) CANOPY COVERED FROM 3 SIDES SHALL BE PROVIDED FOR LOCAL CONTROL STATION INSTALLED OUTDOOR.

DRAWING NOT TO SCALE

Code	Contract No.	Document ID	Part	Rev.
		PIN-LEP-ELT-4001		00

Rev.	Date	Name (Drawn/Prepared)	Date	Name (Checked)	Date	Name (Approved)	Description	Acc. Code	Cat. Code	Acc. Code	Status
00	19.07.2017	KRP	MLD	19.07.2017	RPM	19.07.2017	RPM	ISSUED AS STANDARD			

BAR-Code

Store Location: Server/Share

Store Location: Folder

Store Name PCSR1

Pro. Unit	TON	Group	Type of Document	Sheet
				1 / 1

Con. Unit	Scale	Order No.
	NTS	

thyssenkrupp

	Date	Name
Drawn	19.07.2017	KRP
Prepared	19.07.2017	MLD
Checked	19.07.2017	RPM
Approved	19.07.2017	RPM

Description
INSTALLATION STANDARDS – POWER LOCAL CONTROL STATION ON RAILING (PCSR1)

ISO A4

UH_BO_ISO_A4_P_E_tktSIndia.dwg / AG03_UH_BO_ISO_A4_P.dwg / 14.12.2016

© thyssenkrupp Industrial Solutions (India) Private Limited 2017. All rights reserved

ITEM	DESCRIPTION	MATERIAL	QTY.	SUPPLY BY	INSTALLATION BY
1	LOCAL CONTROL STATION	PROJ. SPEC.	1 NO.	CLIENT	ELECTRICAL CONTRACTOR
2	ISMC 75	M.S. PAINTED	AS REQUIRED	REFER NOTE-3 & 4	
3	HEXAGONAL HEAD BOLT M10 X 30mm LONG, THREADS UPTO HEAD, WITH SUITABLE NUTS & WASHERS (REFER NOTE-3)	HDGI	4 SETS	ELECTRICAL CONTRACTOR	ELECTRICAL CONTRACTOR
4	CANOPY COVERED FROM 3 SIDES (REFER NOTE-5)	PROJ. SPEC.	1 NO.	ELECTRICAL CONTRACTOR	ELECTRICAL CONTRACTOR
5	HEXAGONAL HEAD BOLT M6 X 25mm LONG, THREADS UPTO HEAD, WITH SUITABLE NUTS & WASHERS (FOR CANOPY FIXING)	HDGI	4 SETS	ELECTRICAL CONTRACTOR	ELECTRICAL CONTRACTOR

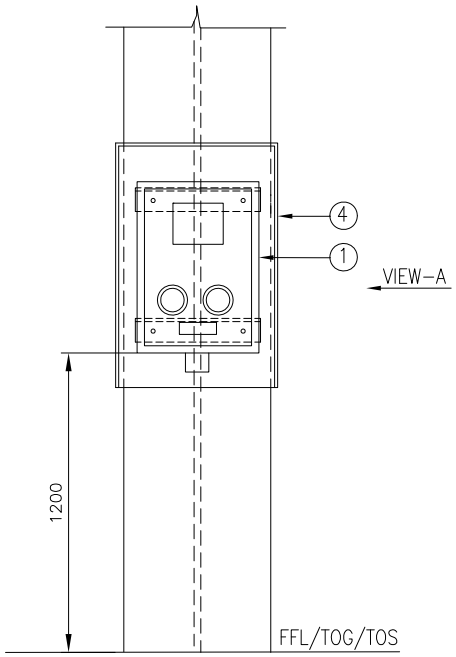

FRONT VIEW

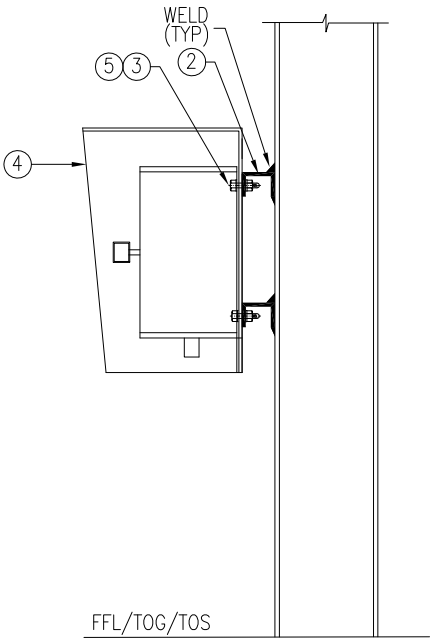

VIEW-A

DRAWING NOT TO SCALE

NOTES

1) ALL DIMENSION ARE IN 'mm' UNLESS OTHERWISE STATED.
2) STEEL SECTIONS SHALL BE PREFABRICATED & PAINTED BEFORE INSTALLATION. AREA AFFECTED DUE TO SITE WELDING SHALL BE CLEANED AND PAINTED.
3) THESE DETAILS SHALL BE VERIFIED WITH ORDERED EQUIPMENT DRAWING.
4) SUPPLY & INSTALLATION OF STEEL IS NOT PART OF THIS INSTALLATION ARRANGEMENT. SAME IS COVERED ELSEWHERE.
5) CANOPY COVERED FROM 3 SIDES SHALL BE PROVIDED FOR LOCAL CONTROL STATION INSTALLED OUTDOOR.

Code	Contract No.	Document ID	Part	Rev.
		PIN-LEP-ELT-4001		00

Rev.	Date	Name (Drawn/Prepared)	Date	Name (Checked)	Date	Name (Approved)	Description	Acc. Code	Cat. Code	Acc. Code	Status
00	19.07.2017	KRP	MLD	19.07.2017	RPM	19.07.2017	RPM	ISSUED AS STANDARD			

BAR-Code

Store Location: Server/Share

Store Location: Folder

Store Name PCSS1

Pro. Unit	TON	Group	Type of Document	Sheet
				1 / 1

Con. Unit	Scale	Order No.
	NTS	

thyssenkrupp

	Date	Name
Drawn	19.07.2017	KRP
Prepared	19.07.2017	MLD
Checked	19.07.2017	RPM
Approved	19.07.2017	RPM

Description
INSTALLATION STANDARDS – POWER LOCAL CONTROL STATION ON STEEL STRUCTURE (PCSS1)

ISO A4

UH_BO_ISO_A4_P_E_tktSIndia.dwg / AG03_UH_BO_ISO_A4_P.dwg / 14.12.2016

© thyssenkrupp Industrial Solutions (India) Private Limited 2017. All rights reserved

ITEM	DESCRIPTION	MATERIAL	QTY.	SUPPLY BY	INSTALLATION BY
1	DISTRIBUTION BOARD/ PANEL	–	1 NO.	CLIENT	ELECTRICAL CONTRACTOR
2	ISMC 75	M.S. PAINTED	AS REQUIRED	REFER NOTE–3 & 4	
3	HEXAGONAL HEAD BOLT M10 X 30mm LONG, THREADS UPTO HEAD, WITH SUITABLE NUTS & WASHERS (REFER NOTE–3)	H.D.G.I.	4 SETS	ELECTRICAL CONTRACTOR	ELECTRICAL CONTRACTOR
4	ANCHOR FASTENER M10 x 75mm LONG WITH SUITABLE NUT & WASHER	SS	4 NOS.	ELECTRICAL CONTRACTOR	ELECTRICAL CONTRACTOR
5	CANOPY COVERED FROM 3 SIDES (REFER NOTE–5)	PROJ. SPEC.	1 NO.	ELECTRICAL CONTRACTOR	ELECTRICAL CONTRACTOR
6	HEXAGONAL HEAD BOLT M6 X 25mm LONG, THREADS UPTO HEAD, WITH SUITABLE NUTS & WASHERS (FOR CANOPY FIXING)	H.D.G.I.	4 SETS	ELECTRICAL CONTRACTOR	ELECTRICAL CONTRACTOR

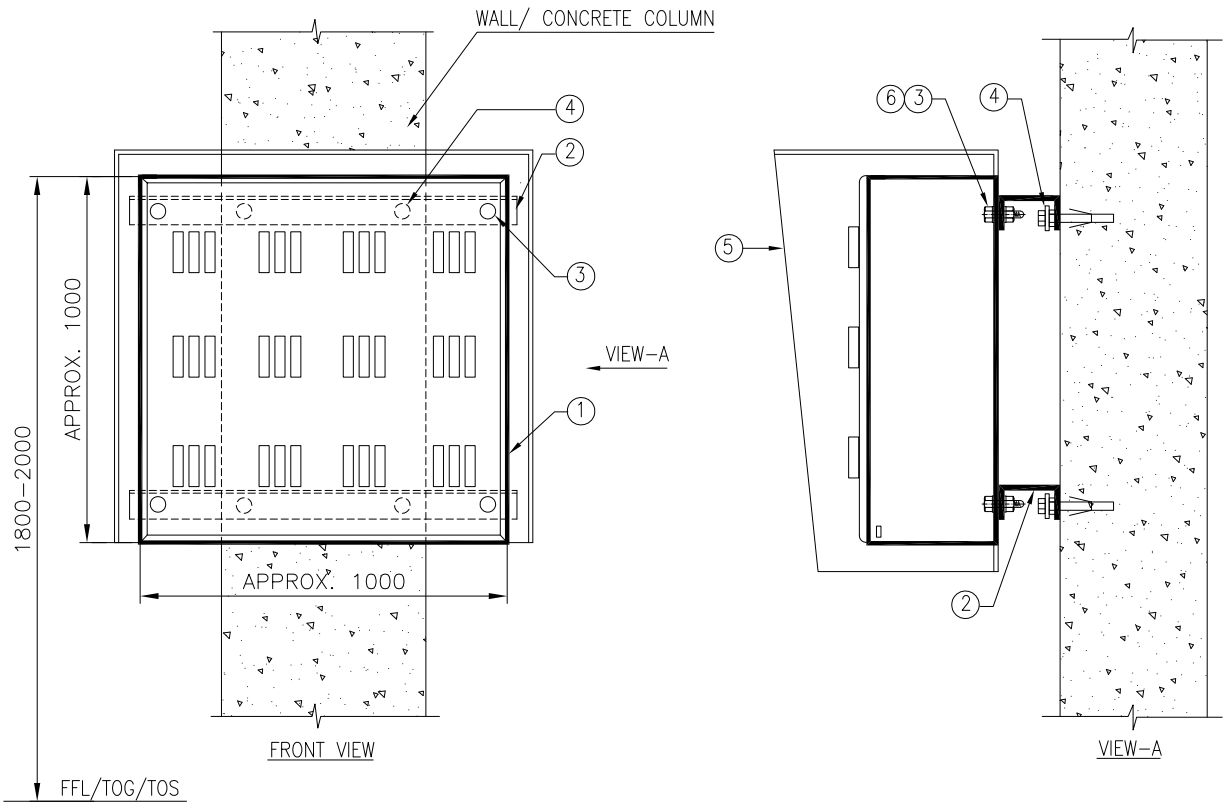

DRAWING NOT TO SCALE

NOTES
1) ALL DIMENSION ARE IN 'mm' UNLESS OTHERWISE STATED.
2) STEEL SECTIONS SHALL BE PREFABRICATED & PAINTED BEFORE INSTALLATION.
3) THESE DETAILS SHALL BE VERIFIED WITH ORDERED EQUIPMENT DRAWING.
4) SUPPLY & INSTALLATION OF STEEL IS NOT PART OF THIS INSTALLATION ARRANGEMENT. SAME IS COVERED ELSEWHERE.
5) CANOPY COVERED FROM 3 SIDES SHALL BE PROVIDED FOR DISTRIBUTION BOARD/PANEL INSTALLED OUTDOOR.

Code	Contract No.	Document ID	Part	Rev.
		PIN–LEP–ELT–4001		00

Rev.	Date	Name (Drawn/Prepared)	Date	Name (Checked)	Date	Name (Approved)	Description	Acc. Code	Cat. Code	Acc. Code	Status
00	19.07.2017	KRP	MLD	19.07.2017	RPM	19.07.2017	RPM	ISSUED AS STANDARD			

BAR–Code

Store Location: Server/Share
Store Location: Folder
Store Name PDBC1

Pro. Unit	TON	Group	Type of Document	Sheet
				1 / 1

Con. Unit	Scale	Order No.
	NTS	

thyssenkrupp

	Date	Name
Drawn	19.07.2017	KRP
Prepared	19.07.2017	MLD
Checked	19.07.2017	RPM
Approved	19.07.2017	RPM

Description
INSTALLATION STANDARDS – POWER DISTRIBUTION BOARD/PANELS (≤1000MM) ON BRACKET, ON WALL/CONCRETE COLUMN (PDBC1)

ISO A4

© thyssenkrupp Industrial Solutions (India) Private Limited 2017. All rights reserved

UH_BO_ISO_A4_P_E_tktSIndia.dwg / AG03_UH_BO_ISO_A4_P.dwg / 14.12.2016

ITEM	DESCRIPTION	MATERIAL	QTY.	SUPPLY BY	INSTALLATION BY
1	DISTRIBUTION BOARD/ PANEL	–	1 NO.	CLIENT	ELECTRICAL CONTRACTOR
2	ISMC 75	M.S. PAINTED	AS REQUIRED	REFER NOTE–3 & 4	
3	HEXAGONAL HEAD BOLT M10 X 30mm LONG, THREADS UPTO HEAD, WITH SUITABLE NUTS & WASHERS (REFER NOTE–3)	H.D.G.I.	4 SETS	ELECTRICAL CONTRACTOR	ELECTRICAL CONTRACTOR
4	CANOPY COVERED FROM 3 SIDES (REFER NOTE–5)	PROJ. SPEC.	1 NO.	ELECTRICAL CONTRACTOR	ELECTRICAL CONTRACTOR
5	HEXAGONAL HEAD BOLT M6 X 25mm LONG, THREADS UPTO HEAD, WITH SUITABLE NUTS & WASHERS (FOR CANOPY FIXING)	H.D.G.I.	4 SETS	ELECTRICAL CONTRACTOR	ELECTRICAL CONTRACTOR

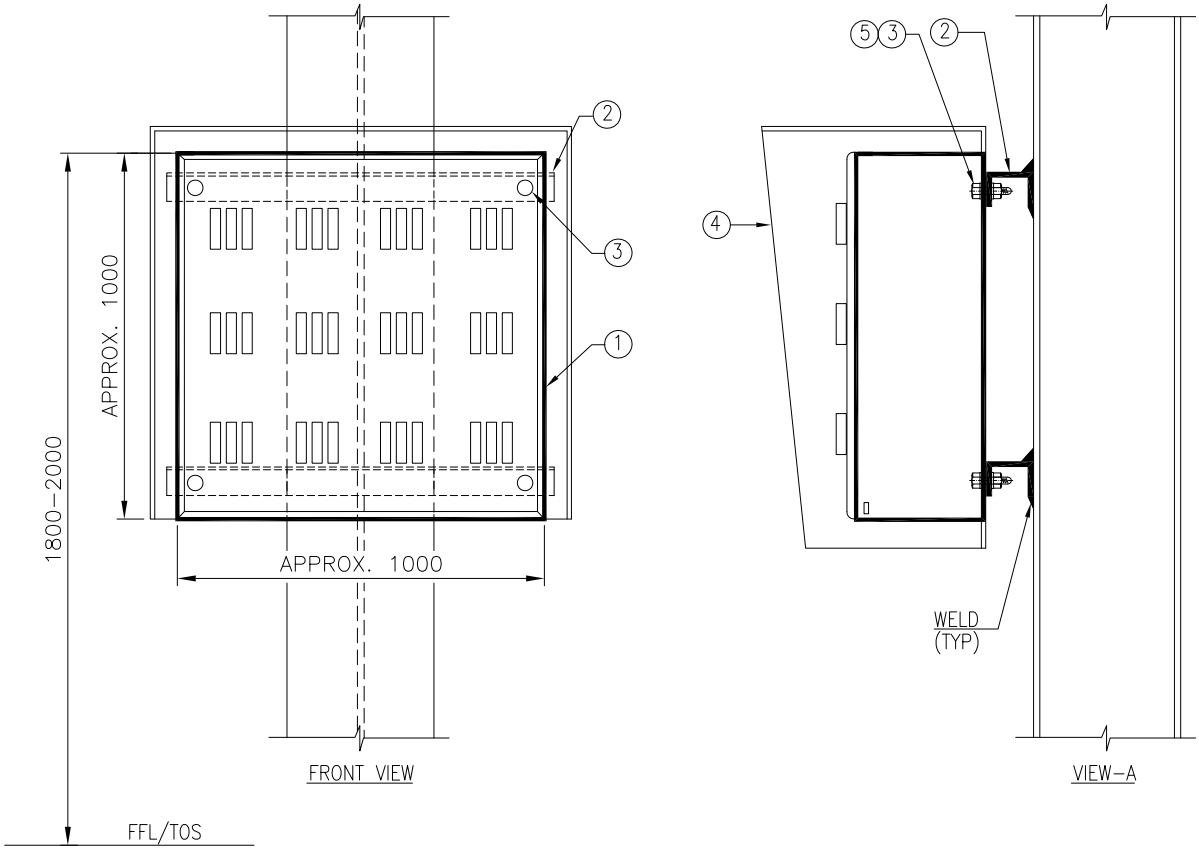

DRAWING NOT TO SCALE

NOTES

1) ALL DIMENSION ARE IN 'mm' UNLESS OTHERWISE SPECIFIED.
2) STEEL SECTIONS SHALL BE PREFABRICATED & PAINTED BEFORE INSTALLATION. AREA AFFECTED DUE TO SITE WELDING SHALL BE CLEANED AND PAINTED.
3) THESE DETAILS SHALL BE VERIFIED WITH ORDERED EQUIPMENT DRAWING.
4) SUPPLY & INSTALLATION OF STEEL IS NOT PART OF THIS INSTALLATION ARRANGEMENT. SAME IS COVERED ELSEWHERE.
5) CANOPY COVERED FROM 3 SIDES SHALL BE PROVIDED FOR DISTRIBUTION BOARD/PANEL INSTALLED OUTDOOR.

Code	Contract No.	Document ID	Part	Rev.
		PIN–LEP–ELT–4001		00

Rev.	Date	Name (Drawn/Prepared)	Date	Name (Checked)	Date	Name (Approved)	Description	Acc. Code	Cat. Code	Acc. Code	Status
00	19.07.2017	KRP	MLD	19.07.2017	RPM	19.07.2017	RPM	ISSUED AS STANDARD			

BAR–Code

Store Location: Server/Share

Store Location: Folder

Store Name PDBS1

Pro. Unit	TON	Group	Type of Document	Sheet
				1 / 1

Con. Unit	Scale	Order No.
	NTS	

thyssenkrupp

	Date	Name
Drawn	19.07.2017	KRP
Prepared	19.07.2017	MLD
Checked	19.07.2017	RPM
Approved	19.07.2017	RPM

Description
INSTALLATION STANDARDS – POWER DISTRIBUTION BOARD/PANEL (≤1000MM) ON BRACKET, ON STRUCTURAL COLUMN (PDBS1)

ISO A4

UH_BO_ISO_A4_P_E_tktSIndia.dwg / AG03_UH_BO_ISO_A4_P.dwg / 14.12.2016

© thyssenkrupp Industrial Solutions (India) Private Limited 2017. All rights reserved

ITEM	DESCRIPTION	MATERIAL	QTY.	SUPPLY BY	INSTALLATION BY
1	DISTRIBUTION BOARD/ PANEL	–	2 OR MORE	CLIENT	ELECTRICAL CONTRACTOR
2	ISMC 75	M.S. PAINTED	AS REQUIRED	REFER NOTE–3 & 4	
3	ISMC 100	M.S. PAINTED	AS REQUIRED	REFER NOTE–3 & 4	
4	150 x 150 x10 THK PLATE	M.S. PAINTED	2 NOS.	ELECTRICAL CONTRACTOR	ELECTRICAL CONTRACTOR
5	HEXAGONAL HEAD BOLT M10 X 30mm LONG, THREADS UPTO HEAD, WITH SUITABLE NUTS & WASHERS (REFER NOTE–3)	H.D.G.I.	AS REQUIRED	ELECTRICAL CONTRACTOR	ELECTRICAL CONTRACTOR
6	ANCHOR FASTENER M10 x 75 LONG WITH SUITABLE NUT & WASHER	GALVANISED STEEL / SS	8 NOS.	ELECTRICAL CONTRACTOR	ELECTRICAL CONTRACTOR
7	200x200x100 (LxWxH)mm PEDESTAL	CONCRETE (GRADE M20)	AS REQUIRED	ELECTRICAL CONTRACTOR	ELECTRICAL CONTRACTOR
8	CANOPY COVERED FROM 3 SIDES (REFER NOTE–5)	PROJ. SPEC.	1 NO.	ELECTRICAL CONTRACTOR	ELECTRICAL CONTRACTOR
9	HEXAGONAL HEAD BOLT M6 X 25mm LONG, THREADS UPTO HEAD, WITH SUITABLE NUTS & WASHERS (FOR CANOPY FIXING)	H.D.G.I.	8 SETS	ELECTRICAL CONTRACTOR	ELECTRICAL CONTRACTOR

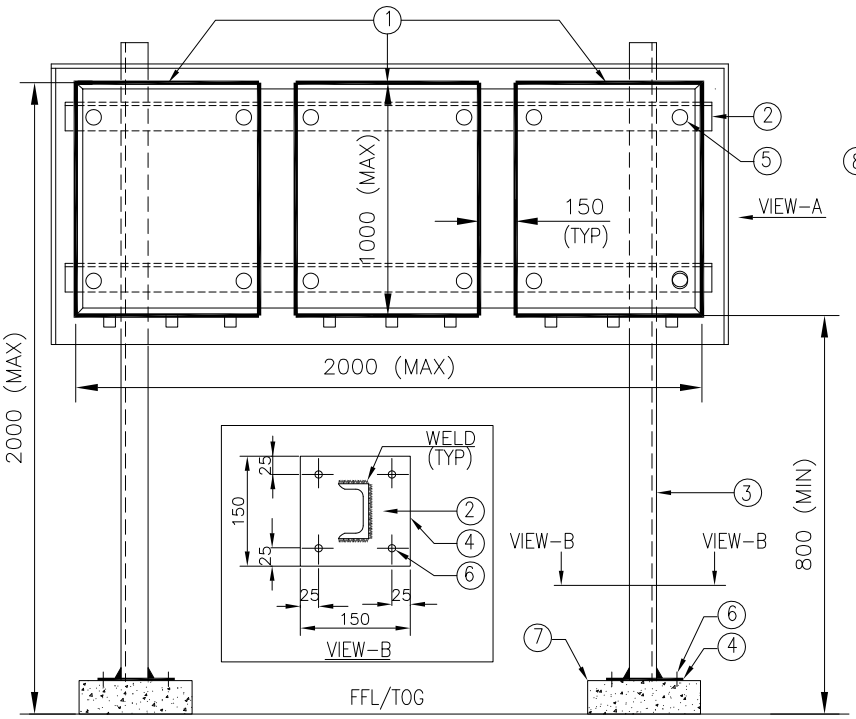

FRONT VIEW

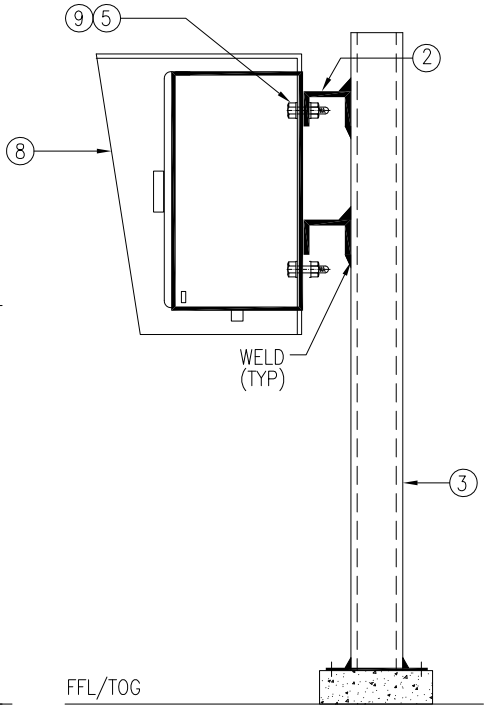

VIEW–A

DRAWING NOT TO SCALE

NOTES

1) ALL DIMENSION ARE IN 'mm' UNLESS OTHERWISE SPECIFIED.
2) STEEL SECTIONS SHALL BE PREFABRICATED & PAINTED BEFORE INSTALLATION. AREA AFFECTED DUE TO SITE WELDING SHALL BE CLEANED AND PAINTED.
3) THESE DETAILS SHALL BE VERIFIED WITH ORDERED EQUIPMENT DRAWING.
4) SUPPLY & INSTALLATION OF STEEL IS NOT PART OF THIS INSTALLATION ARRANGEMENT. SAME IS COVERED ELSEWHERE.
5) CANOPY COVERED FROM 3 SIDES SHALL BE PROVIDED FOR DISTRIBUTION/ FIELD PANELS INSTALLED OUTDOOR.

Code	Contract No.	Document ID	Part	Rev.
		PIN–LEP–ELT–4001		00

Rev.	Date	Name (Drawn/Prepared)	Date	Name (Checked)	Date	Name (Approved)	Description	Acc. Code	Cat. Code	Acc. Code	Status
00	19.07.2017	KRP	19.07.2017	RPM	19.07.2017	RPM	ISSUED AS STANDARD				

BAR–Code

Store Location: Server/Share

Store Location: Folder

Store Name PFPP1

Pro. Unit	TON	Group	Type of Document	Sheet
				1 / 1

Con. Unit	Scale	Order No.
	NTS	

thyssenkrupp

	Date	Name
Drawn	19.07.2017	KRP
Prepared	19.07.2017	MLD
Checked	19.07.2017	RPM
Approved	19.07.2017	RPM

Description

INSTALLATION STANDARDS – POWER DISTRIBUTION BOARD/ PANEL ON CONCRETE FLOOR, ON SELF STANDING PEDASTAL (PFPP1)

ISO A4

UH_BO_ISO_A4_P_E_tktSIndia.dwg / AG03_UH_BO_ISO_A4_P.dwg / 14.12.2016

© thyssenkrupp Industrial Solutions (India) Private Limited 2017. All rights reserved

ITEM	DESCRIPTION	MATERIAL	QTY.	SUPPLY BY	INSTALLATION BY
1	DISTRIBUTION BOARD/ PANEL	–	2 OR MORE	CLIENT	ELECTRICAL CONTRACTOR
2	ISMC 75	M.S. PAINTED	AS REQUIRED	REFER NOTE–3 & 4	
3	ISMC 100	M.S. PAINTED	AS REQUIRED	REFER NOTE–3 & 4	
4	150 x 150 x10 THK PLATE	M.S. PAINTED	2 NOS.	ELECTRICAL CONTRACTOR	ELECTRICAL CONTRACTOR
5	HEXAGONAL HEAD BOLT M10 X 30mm LONG, THREADS UPTO HEAD, WITH SUITABLE NUTS & WASHERS (REFER NOTE–3)	H.D.G.I.	AS REQUIRED	ELECTRICAL CONTRACTOR	ELECTRICAL CONTRACTOR
6	CANOPY COVERED FROM 3 SIDES (REFER NOTE–5)	PROJ. SPEC.	1 NO.	ELECTRICAL CONTRACTOR	ELECTRICAL CONTRACTOR
7	HEXAGONAL HEAD BOLT M6 X 25mm LONG, THREADS UPTO HEAD, WITH SUITABLE NUTS & WASHERS (FOR CANOPY FIXING)	H.D.G.I.	4 SETS	ELECTRICAL CONTRACTOR	ELECTRICAL CONTRACTOR

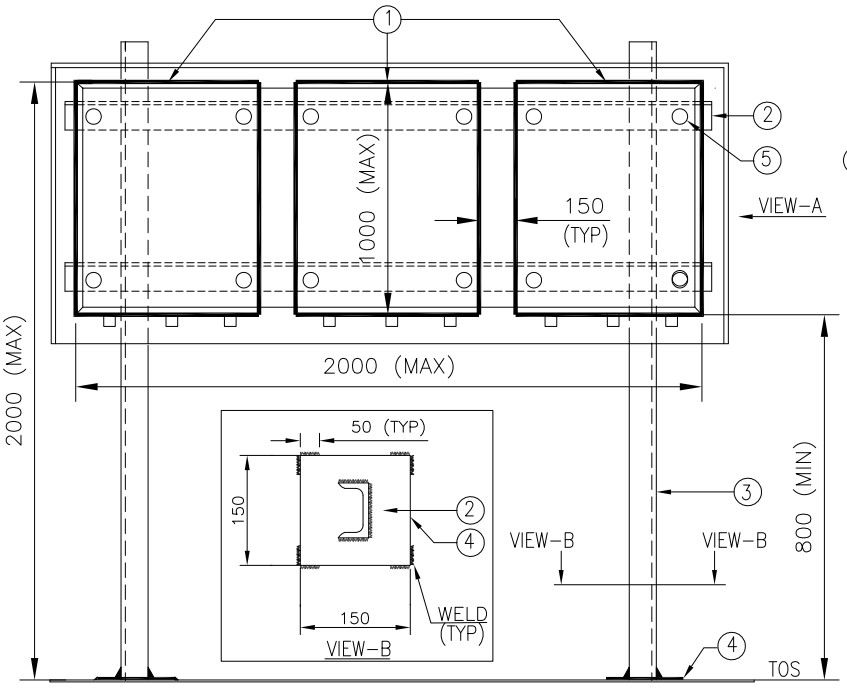

FRONT VIEW

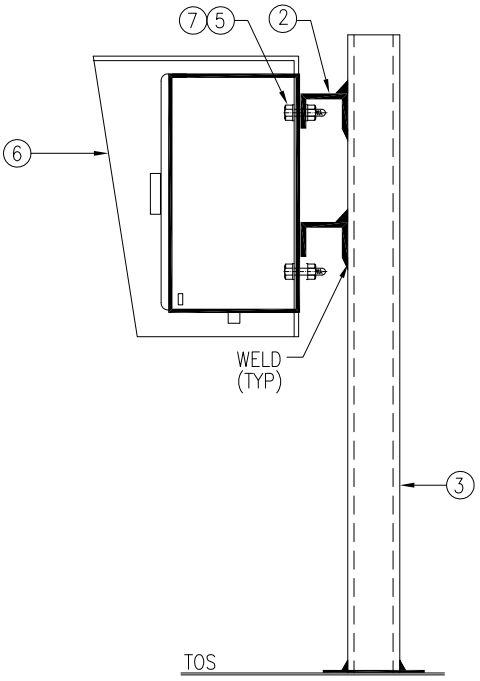

VIEW–A

DRAWING NOT TO SCALE

NOTES

1) ALL DIMENSION ARE IN 'mm' UNLESS OTHERWISE SPECIFIED.
2) STEEL SECTIONS SHALL BE PREFABRICATED & PAINTED BEFORE INSTALLATION. AREA AFFECTED DUE TO SITE WELDING SHALL BE CLEANED AND PAINTED.
3) THESE DETAILS SHALL BE VERIFIED WITH ORDERED EQUIPMENT DRAWING.
4) SUPPLY & INSTALLATION OF STEEL IS NOT PART OF THIS INSTALLATION ARRANGEMENT. SAME IS COVERED ELSEWHERE.
5) CANOPY COVERED FROM 3 SIDES SHALL BE PROVIDED FOR DISTRIBUTION/ FIELD PANELS INSTALLED OUTDOOR.

Code	Contract No.	Document ID	Part	Rev.
		PIN–LEP–ELT–4001		00

Rev.	Date	Name (Drawn/Prepared)	Date	Name (Checked)	Date	Name (Approved)	Description	Acc. Code	Cat. Code	Acc. Code	Status
00	19.07.2017	KRP	MLD	19.07.2017	RPM	19.07.2017	RPM	ISSUED AS STANDARD			

BAR–Code

Store Location: Server/Share

Store Location: Folder

Store Name PFPP2

Pro. Unit	TON	Group	Type of Document	Sheet
				1 / 1

Con. Unit	Scale	Order No.
	NTS	

thyssenkrupp

	Date	Name
Drawn	19.07.2017	KRP
Prepared	19.07.2017	MLD
Checked	19.07.2017	RPM
Approved	19.07.2017	RPM

Description
INSTALLATION STANDARDS – POWER DISTRIBUTION BOARD/ PANEL ON STEEL PLATFORM, ON SELF STANDING PEDASTAL (PFPP2)

ISO A4

UH_BO_ISO_A4_P_E_tktSIndia.dwg / AG03_UH_BO_ISO_A4_P.dwg / 14.12.2016

© thyssenkrupp Industrial Solutions (India) Private Limited 2017. All rights reserved

UH_BO_ISO_A4_P_E_tktSIndia.dwg / AG03_UH_BO_ISO_A4_P.dwg / 14.12.2016

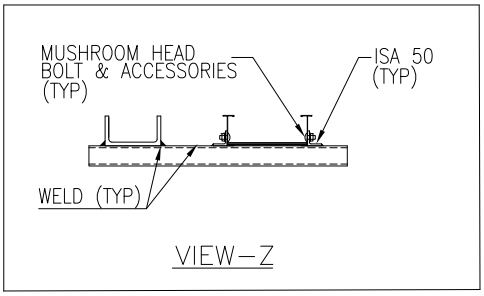

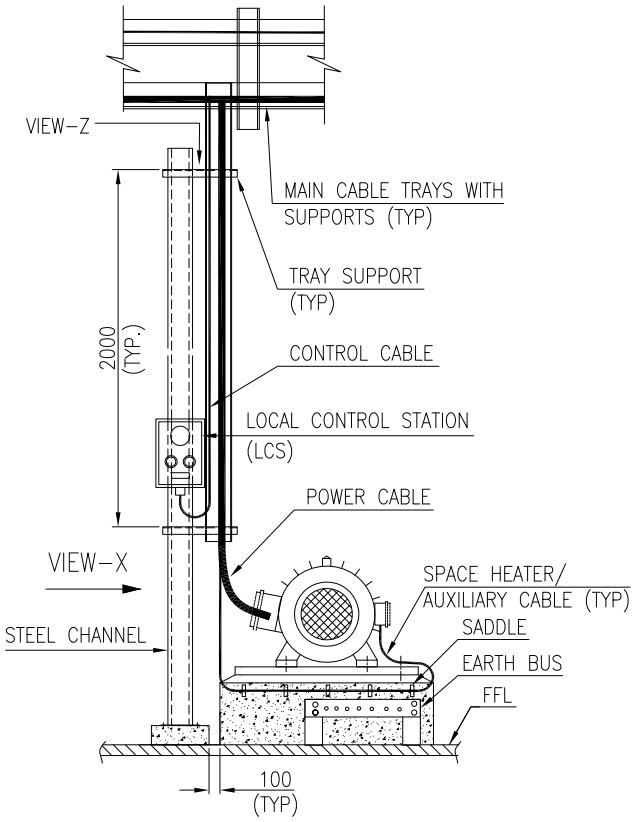

TYPICAL VIEW: CABLE TRAY DROPPING NEAR MOTOR

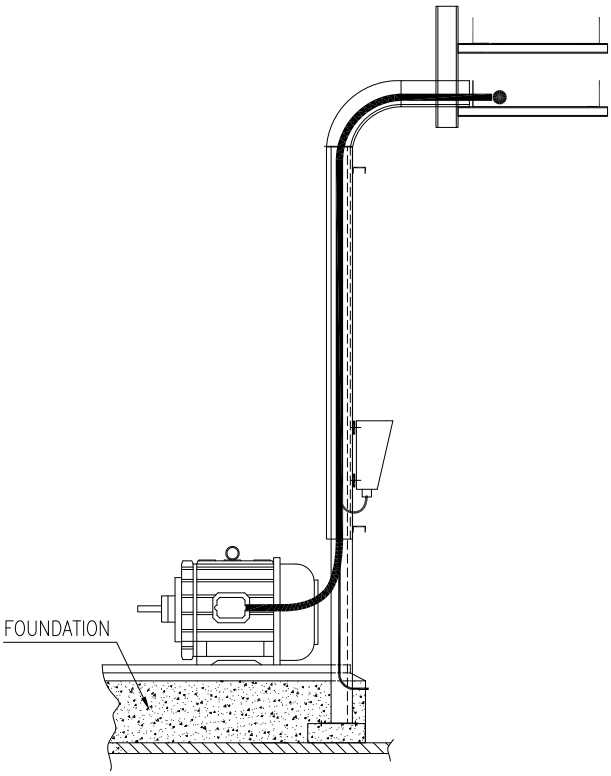

VIEW–X

DRAWING NOT TO SCALE

NOTES

1) ALL DIMENSION ARE IN 'mm' UNLESS OTHERWISE SPECIFIED.
2) THE INSTALLATION ARRANGEMENT IS INDICATIVE ONLY. ACTUAL INSTALLATION SHALL BE SUIT TO SITE CONDITIONS.
3) SINGLE RUN OF POWER CABLE WITH OF OD ≤25mm & ASSOCIATED AUXILIARY CABLES SHALL BE ROUTED THROUGH "C" SECTION WITH SUITABLE TYING/FIXING ARRANGEMENT. FOR OD OF CABLES >25mm, CABLE TRAY WIDTH NEAR MOTOR DROPPING SHALL BE DECIDED BASED ON OD OF THE CABLE, NO. OF RUNS, REQUIREMENT OF BARRIER, SPACE AVAILABILITY ETC.
4) FOR MATERIAL, QUANTITY & DETAILS OF LCS INSTALLATION, REFER RELEVANT INSTALLATION ARRANGEMENT SPECIFIED IN LAYOUT.
5) FOR MATERIAL, QUANTITY & DETAILS OF EARTH BUS INSTALLATION, REFER RELEVANT INSTALLATION ARRANGEMENT SPECIFIED IN LAYOUT.

Code	Contract No.	Document ID	Part	Rev.
		PIN–LEP–ELT–4001		00

Rev.	Date	Name (Drawn/Prepared)	Date	Name (Checked)	Date	Name (Approved)	Description	Acc. Code	Cat. Code	Acc. Code	Status
00	19.07.2017	KRP	19.07.2017	MLD	19.07.2017	RPM	ISSUED AS STANDARD				

BAR–Code

Store Location: Server/Share

Store Location: Folder

Store Name PMAG1

Pro. Unit	TON	Group	Type of Document	Sheet
				1 / 1

Con. Unit	Scale	Order No.
	NTS	

thyssenkrupp

	Date	Name
Drawn	19.07.2017	KRP
Prepared	19.07.2017	MLD
Checked	19.07.2017	RPM
Approved	19.07.2017	RPM

Description
INSTALLATION STANDARDS – POWER
POWER & CONTROL CABLING FOR MOTORS, ROUTED ABOVE GROUND
(PMAG1)

ISO A4

© thyssenkrupp Industrial Solutions (India) Private Limited 2017. All rights reserved

ITEM	DESCRIPTION	MATERIAL
1	CONDUIT FOR POWER CABLE(S)	H.D.G.I.
2	CONDUIT FOR CONTROL & AUXILIARY CABLES	H.D.G.I.
3	SUTABLE SIZE OF CLAMPS FOR ALL CONDUITS/CABLE & FIXING ACCESSORIES SUCH AS SCREWS, PLASTIC ANCHORS ETC.	H.D.G.I.
4	WEATHERPROOF SEALANT	INDUSTRY STANDARD

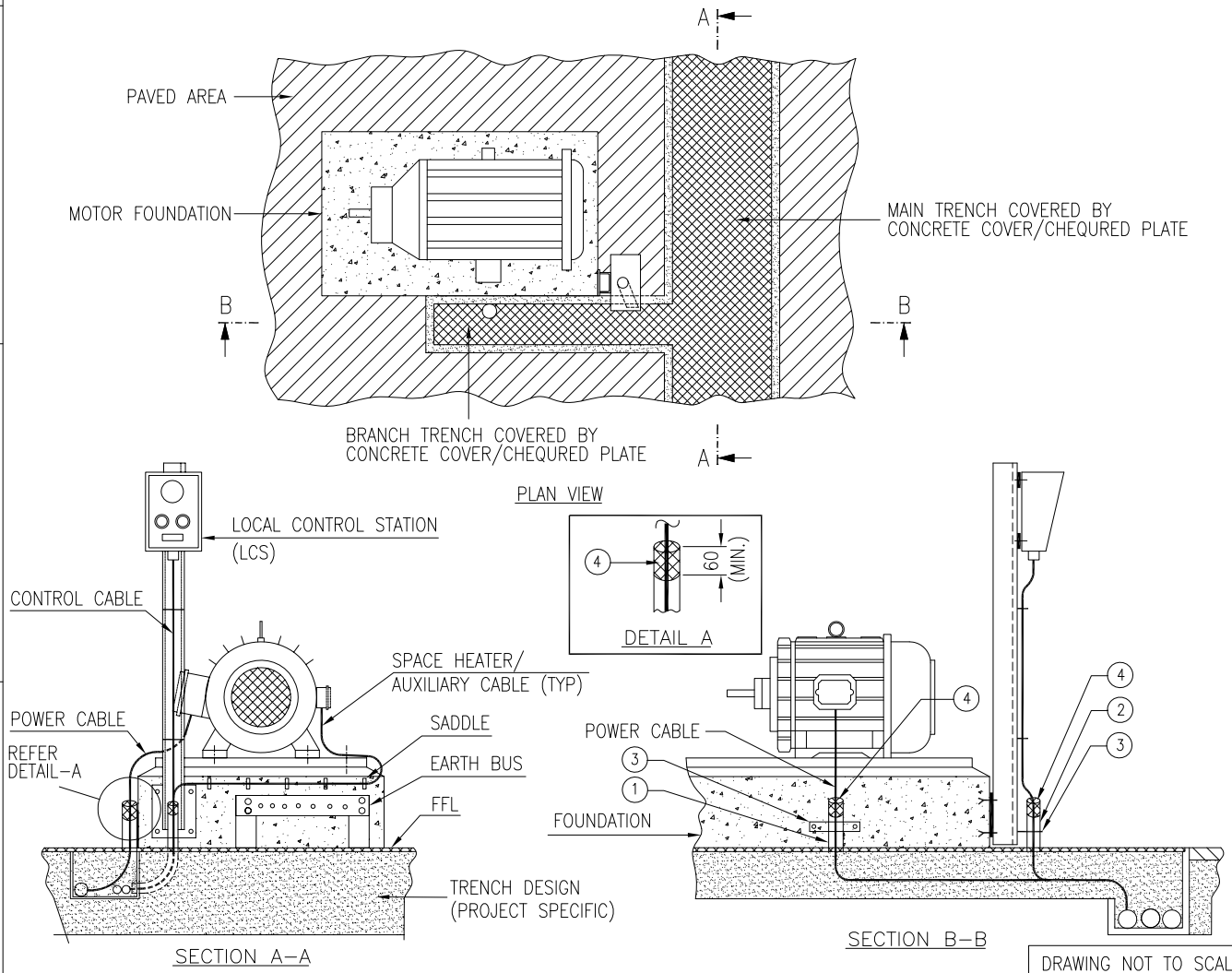

DRAWING NOT TO SCALE

NOTES

1) ALL DIMENSION ARE IN 'mm' UNLESS OTHERWISE SPECIFIED.
2) THE INSTALLATION ARRANGEMENT IS INDICATIVE ONLY. ACTUAL INSTALLATION SHALL BE SUIT TO SITE CONDITIONS.
3) FOR MATERIAL, QUANTITY & DETAILS OF LCS INSTALLATION, REFER RELEVANT INSTALLATION ARRANGEMENT SPECIFIED IN LAYOUT.
4) FOR MATERIAL, QUANTITY & DETAILS OF EARTH BUS INSTALLATION, REFER RELEVANT INSTALLATION ARRANGEMENT SPECIFIED IN LAYOUT.

Code	Contract No.	Document ID	Part	Rev.
		PIN-LEP-ELT-4001		00

Rev.	Date	Name (Drawn/Prepared)	Date	Name (Checked)	Date	Name (Approved)	Description	Acc. Code	Cat. Code	Acc. Code	Status
00	19.07.2017	KRP	MLD	19.07.2017	RPM	19.07.2017	RPM	ISSUED AS STANDARD			

BAR-Code

Store Location: Server/Share

Store Location: Folder

Store Name PMUG1.dwg

Pro. Unit	TON	Group	Type of Document	Sheet
				1 / 1

Con. Unit	Scale	Order No.
	NTS	

thyssenkrupp

	Date	Name
Drawn	19.07.2017	KRP
Prepared	19.07.2017	MLD
Checked	19.07.2017	RPM
Approved	19.07.2017	RPM

Description

INSTALLATION STANDARDS – POWER POWER & CONTROL CABLING FOR MOTORS, ROUTED IN UNDERGROUND TRENCH (PMUG1)

ISO A4

UH_BO_ISO_A4_P_E_IktSIndia.dwg / AG03_UH_BO_ISO_A4_P.dwg / 14.12.2016

© thyssenkrupp Industrial Solutions (India) Private Limited 2017. All rights reserved

ITEM	DESCRIPTION	MATERIAL
1	CONDUIT FOR POWER CABLE(S)	H.D.G.I.
2	CONDUIT FOR CONTROL & SPACE HEATER CABLES	H.D.G.I.
3	SUTABLE SIZE OF CLAMPS FOR ALL CONDUITS/CABLE & FIXING ACCESSORIES SUCH AS SCREWS, PLASTIC ANCHORS ETC.	H.D.G.I.
4	WEATHERPROOF SEALANT	INDUSTRY STANDARD

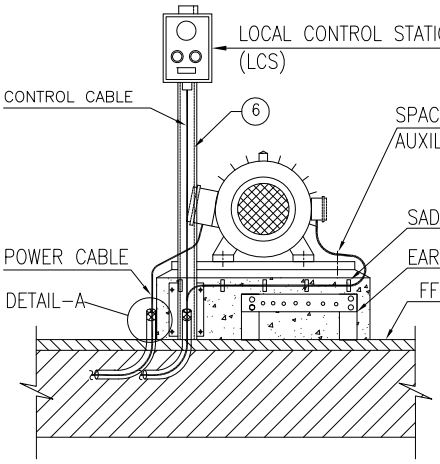

SECTION A–A

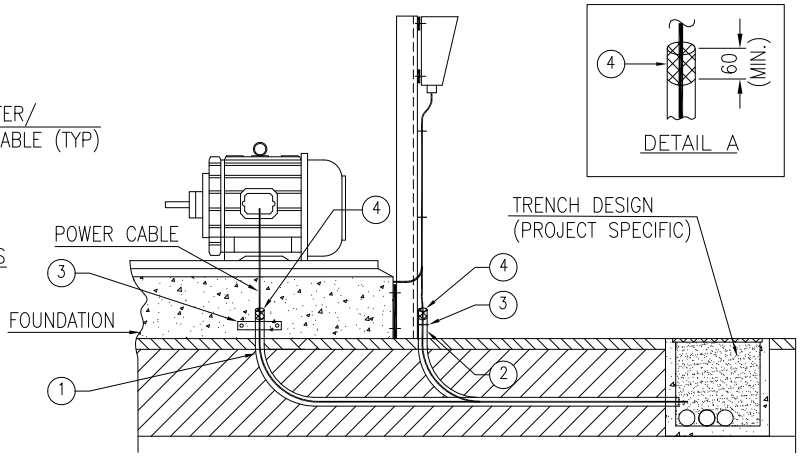

SECTION B–B

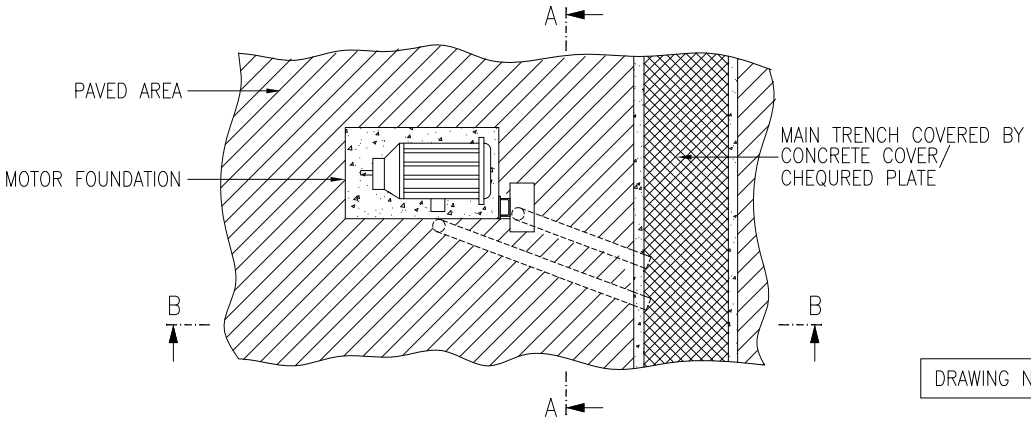

PLAN

DRAWING NOT TO SCALE

NOTES

1) ALL DIMENSION ARE IN 'mm' UNLESS OTHERWISE SPECIFIED.
2) THE INSTALLATION ARRANGEMENT IS INDICATIVE ONLY. ACTUAL INSTALLATION SHALL BE SUIT TO SITE CONDITIONS.
3) FOR MATERIAL, QUANTITY & DETAILS OF LCS INSTALLATION, REFER RELEVANT INSTALLATION ARRANGEMENT SPECIFIED IN LAYOUT.
4) FOR MATERIAL, QUANTITY & DETAILS OF EARTH BUS INSTALLATION, REFER RELEVANT INSTALLATION ARRANGEMENT SPECIFIED IN LAYOUT.

Code	Contract No.	Document ID	Part	Rev.
		PIN–LEP–ELT–4001		00

Rev.	Date	Name (Drawn/Prepared)	Date	Name (Checked)	Date	Name (Approved)	Description	Acc. Code	Cat. Code	Acc. Code	Status
00	19.07.2017	KRP	MLD	19.07.2017	RPM	19.07.2017	RPM	ISSUED AS STANDARD			

BAR–Code

Store Location: Server/Share

Store Location: Folder

Store Name PMUG2

Pro. Unit	TON	Group	Type of Document	Sheet
				1 / 1

Con. Unit	Scale	Order No.
	NTS	

thyssenkrupp

	Date	Name
Drawn	19.07.2017	KRP
Prepared	19.07.2017	MLD
Checked	19.07.2017	RPM
Approved	19.07.2017	RPM

Description
INSTALLATION STANDARDS – POWER POWER & CONTROL CABLING FOR MOTORS, ROUTED IN UNDERGROUND TRENCH & CONDUITS (PMUG2)

ISO A4

UH_BO_ISO_A4_P_E_tktSIndia.dwg / AG03_UH_BO_ISO_A4_P.dwg / 14.12.2016

© thyssenkrupp Industrial Solutions (India) Private Limited 2017. All rights reserved

ITEM	DESCRIPTION	MATERIAL	QTY.	SUPPLY BY	INSTALLATION BY
1	SOCKET OUTLET	PROJ. SPEC.	1 NO.	CLIENT	ELECTRICAL CONTRACTOR
2	ISMC 75	M.S. PAINTED	AS REQUIRED	REFER NOTE-3 & 4	
3	HEXAGONAL HEAD BOLT M10 X 30mm LONG, THREADS UPTO HEAD, WITH SUITABLE NUTS & WASHERS (REFER NOTE-3)	H.D.G.I.	4 SETS	ELECTRICAL CONTRACTOR	ELECTRICAL CONTRACTOR
4	ANCHOR FASTENER M10 x 75mm LONG WITH SUITABLE NUT & WASHER	GALVANISED STEEL/SS	4 NOS.	ELECTRICAL CONTRACTOR	ELECTRICAL CONTRACTOR
5	CANOPY COVERED FROM 3 SIDES (REFER NOTE-5)	PROJ. SPEC.	1 NO.	ELECTRICAL CONTRACTOR	ELECTRICAL CONTRACTOR
6	HEXAGONAL HEAD BOLT M6 X 25mm LONG, THREADS UPTO HEAD, WITH SUITABLE NUTS & WASHERS (FOR CANOPY FIXING)	H.D.G.I.	4 SETS	ELECTRICAL CONTRACTOR	ELECTRICAL CONTRACTOR

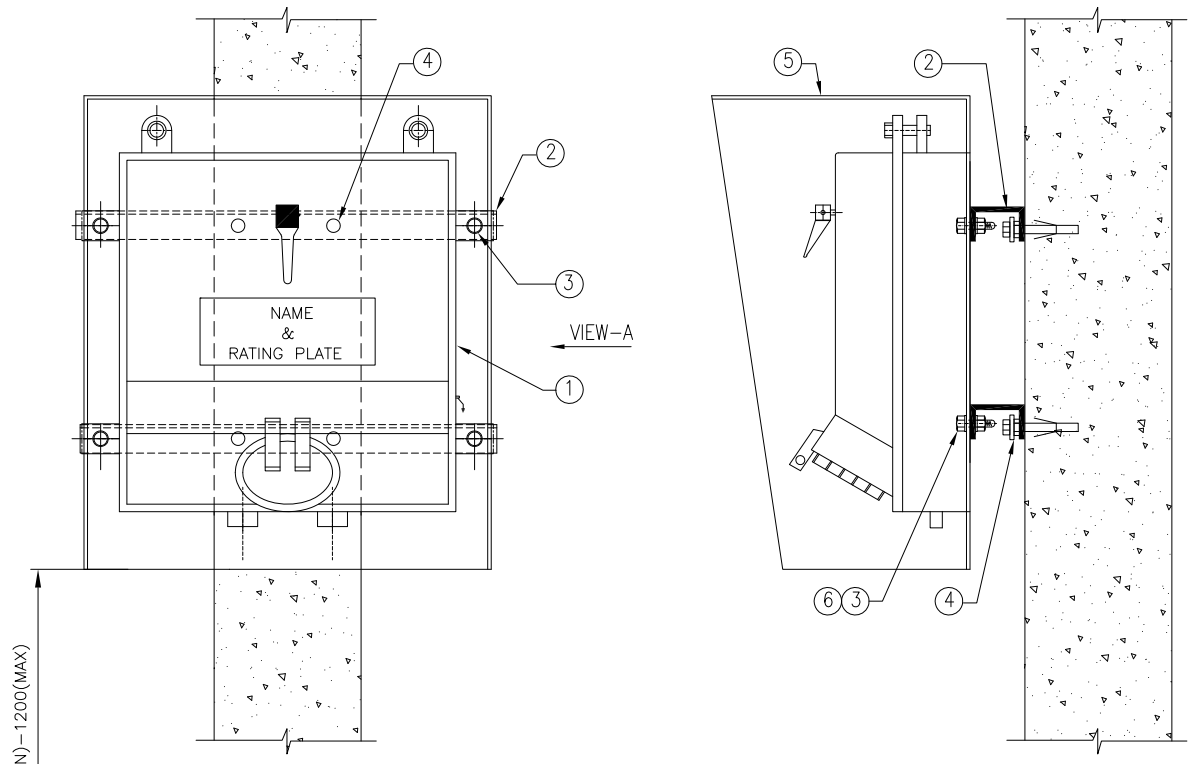

DRAWING NOT TO SCALE

NOTES
1) ALL DIMENSION ARE IN 'mm' UNLESS OTHERWISE SPECIFIED.
2) STEEL SECTIONS SHALL BE PREFABRICATED & PAINTED BEFORE INSTALLATION.
3) THESE DETAILS SHALL BE VERIFIED WITH ORDERED EQUIPMENT DRAWING.
4) SUPPLY & INSTALLATION OF STEEL IS NOT PART OF THISINSTALLATION ARRANGEMENT. SAME IS COVERED ELSEWHERE.
5) CANOPY COVERED FROM 3 SIDES SHALL BE PROVIDED FOR SOCKET INSTALLED OUTDOOR.

Code	Contract No.	Document ID	Part	Rev.
		PIN-LEP-ELT-4001		00

Rev.	Date	Name (Drawn/Prepared)	Date	Name (Checked)	Date	Name (Approved)	Description	Acc. Code	Cat. Code	Acc. Code	Status
00	19.07.2017	KRP MLD	19.07.2017	RPM	19.07.2017	RPM	ISSUED AS STANDARD				

BAR-Code

Store Location: Server/Share
Store Location: Folder
Store Name PSOC1

Pro. Unit	TON	Group	Type of Document	Sheet
				1 / 1

Con. Unit	Scale	Order No.
	NTS	

thyssenkrupp

	Date	Name
Drawn	19.07.2017	KRP
Prepared	19.07.2017	MLD
Checked	19.07.2017	RPM
Approved	19.07.2017	RPM

Description
INSTALLATION STANDARDS - POWER SOCKET OUTLET ON BRACKET, ON WALL/CONCRETE COLUMN (PSOC1)

ISO A4

UH_BO_ISO_A4_P_E_tktSIndia.dwg / AG03_UH_BO_ISO_A4_P.dwg / 14.12.2016

© thyssenkrupp Industrial Solutions (India) Private Limited 2017. All rights reserved

ITEM	DESCRIPTION	MATERIAL	QTY.	SUPPLY BY	INSTALLATION BY
1	SOCKET OUTLET	PROJ. SPEC.	1 NO.	CLIENT	ELECTRICAL CONTRACTOR
2	ISMC 75	M.S. PAINTED	AS REQUIRED	REFER NOTE-3 & 4	
3	HEXAGONAL HEAD BOLT M10 X 30mm LONG, THREADS UPTO HEAD, WITH SUITABLE NUTS & WASHERS (REFER NOTE-3)	H.D.G.I.	4 SETS	ELECTRICAL CONTRACTOR	ELECTRICAL CONTRACTOR
4	CANOPY COVERED FROM 3 SIDES (REFER NOTE-5)	PROJ. SPEC.	1 NO.	ELECTRICAL CONTRACTOR	ELECTRICAL CONTRACTOR
5	HEXAGONAL HEAD BOLT M6 X 25mm LONG, THREADS UPTO HEAD, WITH SUITABLE NUTS & WASHERS (FOR CANOPY FIXING)	H.D.G.I.	4 SETS	ELECTRICAL CONTRACTOR	ELECTRICAL CONTRACTOR

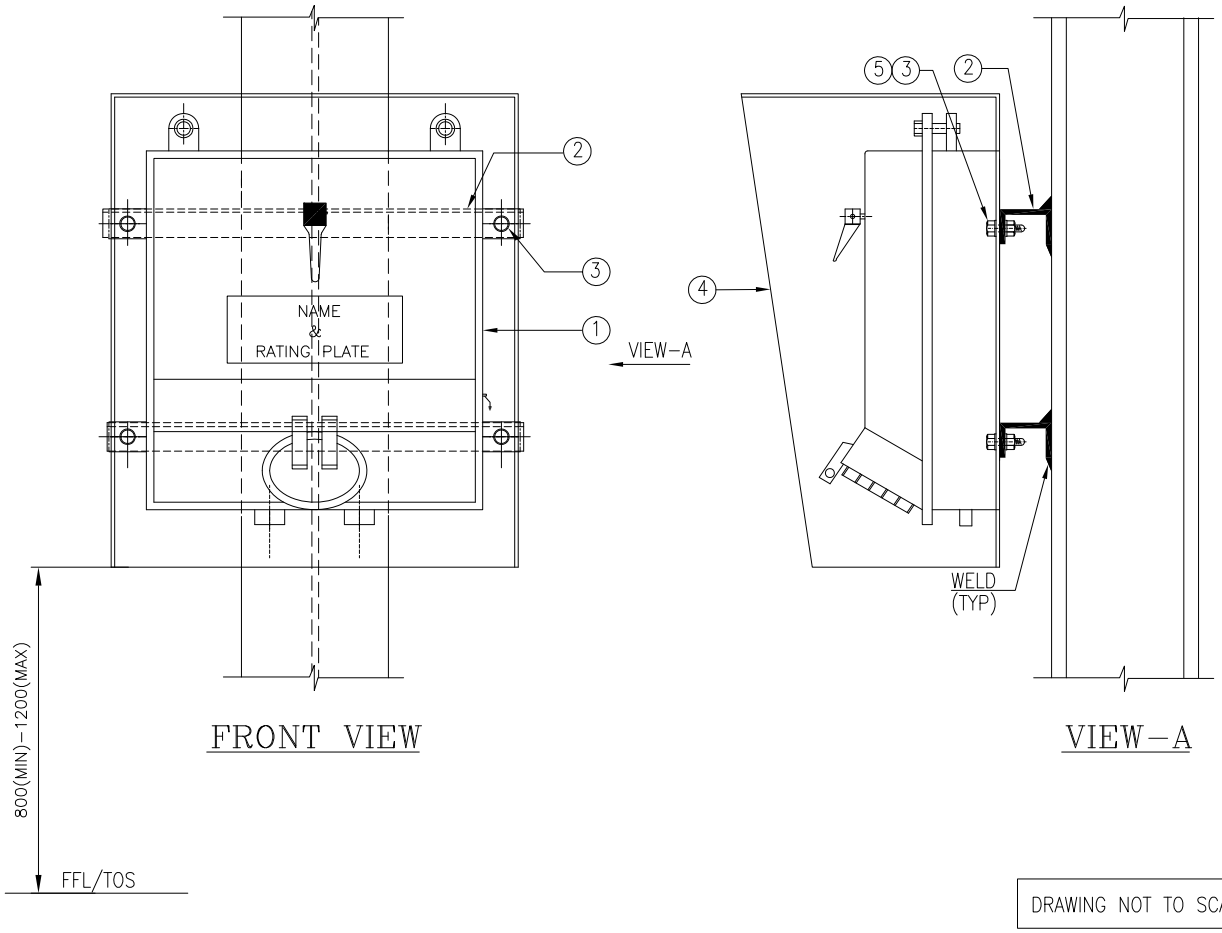

NOTES

1) ALL DIMENSION ARE IN 'mm' UNLESS OTHERWISE SPECIFIED.
2) STEEL SECTIONS SHALL BE PREFABRICATED & PAINTED BEFORE INSTALLATION. AREA AFFECTED DUE TO SITE WELDING SHALL BE CLEANED AND PAINTED.
3) THESE DETAILS SHALL BE VERIFIED WITH ORDERED EQUIPMENT DRAWING.
4) SUPPLY & INSTALLATION OF STEEL IS NOT PART OF THIS INSTALLATION ARRANGEMENT. SAME IS COVERED ELSEWHERE.
5) CANOPY COVERED FROM 3 SIDES SHALL BE PROVIDED FOR SOCKET INSTALLED OUTDOOR.

Code	Contract No.	Document ID	Part	Rev.
		PIN-LEP-ELT-4001		00

Rev.	Date	Name (Drawn/Prepared)	Date	Name (Checked)	Date	Name (Approved)	Description	Acc. Code	Cat. Code	Acc. Code	Status
00	19.07.2017	KRP	MLD	19.07.2017	RPM	19.07.2017	RPM	ISSUED AS STANDARD			

BAR-Code

Store Location: Server/Share

Store Location: Folder

Store Name PSOS1

Pro. Unit	TON	Group	Type of Document	Sheet
				1 / 1

Con. Unit	Scale	Order No.
	NTS	

thyssenkrupp

	Date	Name
Drawn	19.07.2017	KRP
Prepared	19.07.2017	MLD
Checked	19.07.2017	RPM
Approved	19.07.2017	RPM

Description
INSTALLATION STANDARDS - POWER SOCKET OUTLET ON BRACKET, ON STRUCTURAL COLUMN (PSOS1)

ISO A4

UH_BO_ISO_A4_P_E_tktSIndia.dwg / AG03_UH_BO_ISO_A4_P.dwg / 14.12.2016

© thyssenkrupp Industrial Solutions (India) Private Limited 2017. All rights reserved

UH_BO_ISO_A4_P_E_tktSIndia.dwg / AG03_UH_BO_ISO_A4_P.dwg / 14.12.2016

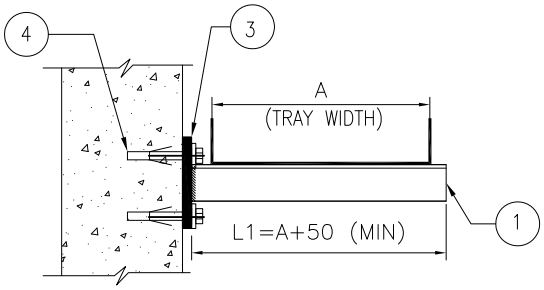

SINGLE HORIZONTAL TRAY FROM SIDE OF CONCRETE BEAM/COLUMN

MAX LIMITS IN DIMENSIONS	
L1	H1
1000	NA

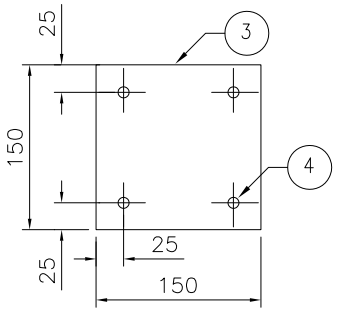

DETAIL–1

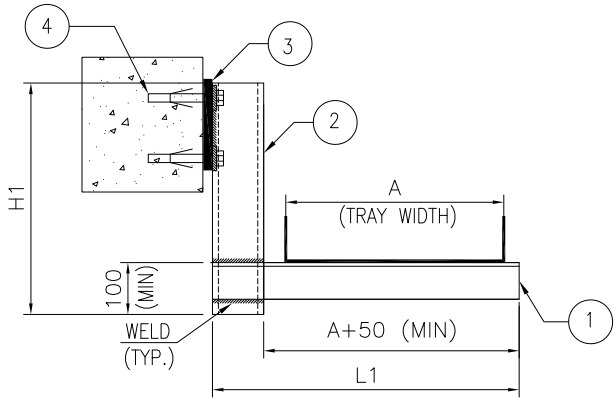

SINGLE HORIZONTAL TRAY SUSPENDED FROM SIDE OF CONCRETE BEAM/COLUMN

MAX LIMITS IN DIMENSIONS	
L1	H1
1000	1000

ITEM	DESCRIPTION	MATERIAL
1	ISA 75 (75x75x6mm)	MS PAINTED
2	ISMC 100	MS PAINTED
3	150x150x10mm THK. PLATE (REFER DETAIL–1)	MS PAINTED
4	M10 X 75 LONG HEAVY DUTY ANCHOR FASTENER WITH SUITABLE NUT & WASHER	GALVANISED STEEL/SS

NOTES

DRAWING NOT TO SCALE

1) ALL DIMENSION ARE IN 'mm' UNLESS OTHERWISE STATED.
2) TYPICAL ARRANGEMENT IS INDICATED IN THE DRAWING.
3) GENERALLY, ALL CABLE TRAY SUPPORTS SHALL BE ENGINEERED IN COORDINATION WITH CIVIL DEPARTMENT. THIS INSTALLATION ARRANGEMENT SHALL BE FOLLOWED IN EXCEPTIONAL CASES ONLY. E.G. TRAYS ENGINEERED AFTER CIVIL INFORMATION DUE TO LACK OF INFORMATION ON PACKAGE UNIT CONSUMERS ETC.
4) STEEL SECTIONS SHALL BE PREFABRICATED & PAINTED BEFORE INSTALLATION. AREA AFFECTED DUE TO SITE WELDING SHALL BE CLEANED AND PAINTED.
5) SUPPORTING DETAILS ARE APPLICABLE FOR TRAY WIDTHS 600MM & BELOW.
6) INSERT PLATE SHALL BE ANCHORED AT THE CENTER OF THE AVAILABLE SURFACE.

Code	Contract No.	Document ID	Part	Rev.
		PIN–LEP–ELT–4001		00

Rev.	Date	Name (Drawn/Prepared)		Date	Name (Checked)		Date	Name (Approved)	Description	Acc. Code	Cat. Code	Acc. Code	Status
00	19.07.2017	KRP	MLD	19.07.2017	RPM		19.07.2017	RPM	ISSUED AS STANDARD				

BAR–Code

Store Location: Server/Share

Store Location: Folder

Store Name PCTS1

Pro. Unit	TON	Group	Type of Document	Sheet
				1 / 1

Con. Unit	Scale	Order No.
	NTS	

thyssenkrupp

	Date	Name
Drawn	19.07.2017	KRP
Prepared	19.07.2017	MLD
Checked	19.07.2017	RPM
Approved	19.07.2017	RPM

Description
INSTALLATION STANDARDS – POWER
TYPICAL DETAILS OF CABLE TRAY SUPPORTING: TYPE–1
(PCTS1)

ISO A4

© thyssenkrupp Industrial Solutions (India) Private Limited 2017. All rights reserved

UH_BO_ISO_A4_P_E_tktSIndia.dwg / AG03_UH_BO_ISO_A4_P.dwg / 14.12.2016

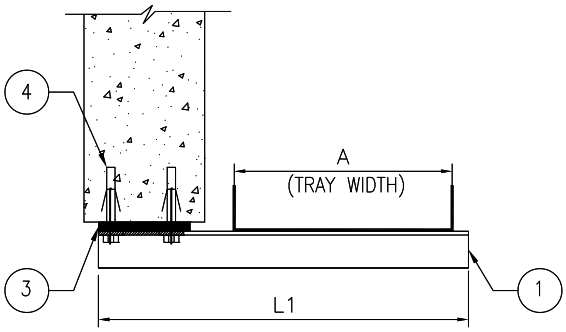

SINGLE HORIZONTAL TRAY FROM BOTTOM OF CONCRETE BEAM

MAX LIMITS IN DIMENSIONS	
L1	H1
800	NA

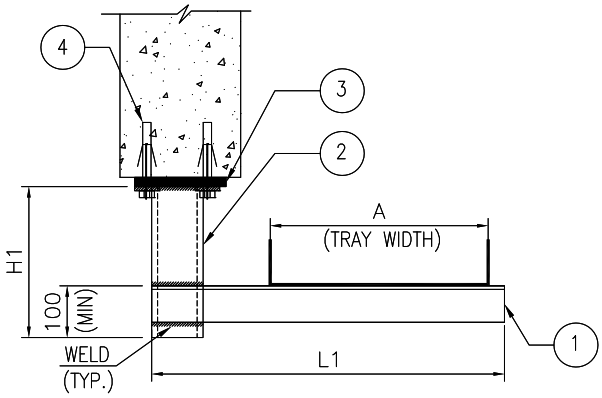

SINGLE HORIZONTAL TRAY SUSPENDED FROM BOTTOM OF CONCRETE BEAM

MAX LIMITS IN DIMENSIONS	
L1	H1
800	600

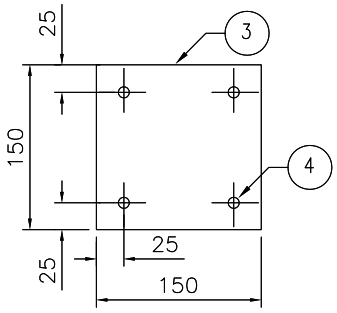

DETAIL–1

ITEM	DESCRIPTION	MATERIAL
1	ISA 75 (75x75x6mm)	MS PAINTED
2	ISMC 100	MS PAINTED
3	150x150x10mm THK. PLATE (REFER DETAIL–1)	MS PAINTED
4	M10 X 75 LONG HEAVY DUTY ANCHOR FASTENER WITH SUITABLE NUT & WASHER	GALVANISED STEEL/SS

NOTES

DRAWING NOT TO SCALE

1) ALL DIMENSION ARE IN 'mm' UNLESS OTHERWISE STATED.
2) TYPICAL ARRANGEMENT IS INDICATED IN THE DRAWING.
3) GENERALLY, ALL CABLE TRAY SUPPORTS SHALL BE ENGINEERED IN COORDINATION WITH CIVIL DEPARTMENT. THIS INSTALLATION ARRANGEMENT SHALL BE FOLLOWED IN EXCEPTIONAL CASES ONLY. E.G. TRAYS ENGINEERED AFTER CIVIL INFORMATION DUE TO LACK OF INFORMATION ON PACKAGE UNIT CONSUMERS ETC.
4) STEEL SECTIONS SHALL BE PREFABRICATED & PAINTED BEFORE INSTALLATION. AREA AFFECTED DUE TO SITE WELDING SHALL BE CLEANED AND PAINTED.
5) SUPPORTING DETAILS ARE APPLICABLE FOR TRAY WIDTHS 600MM & BELOW.
6) INSERT PLATE SHALL BE ANCHORED AT THE CENTER OF THE AVAILABLE SURFACE.

Code	Contract No.	Document ID	Part	Rev.
		PIN–LEP–ELT–4001		00

Rev.	Date	Name (Drawn/Prepared)		Date	Name (Checked)		Date	Name (Approved)	Description	Acc. Code	Cat. Code	Acc. Code	Status
00	19.07.2017	KRP	MLD	19.07.2017	RPM		19.07.2017	RPM	ISSUED AS STANDARD				

BAR–Code

Store Location: Server/Share

Store Location: Folder

Store Name PCTS2

Pro. Unit	TON	Group	Type of Document	Sheet
				1 / 1

Con. Unit	Scale	Order No.
	NTS	

thyssenkrupp

	Date	Name
Drawn	19.07.2017	KRP
Prepared	19.07.2017	MLD
Checked	19.07.2017	RPM
Approved	19.07.2017	RPM

Description
INSTALLATION STANDARDS – POWER
TYPICAL DETAILS OF CABLE TRAY SUPPORTING: TYPE–2
(PCTS2)

ISO A4

© thyssenkrupp Industrial Solutions (India) Private Limited 2017. All rights reserved

UH_BO_ISO_A4_P_E_tktSIndia.dwg / AG03_UH_BO_ISO_A4_P.dwg / 14.12.2016

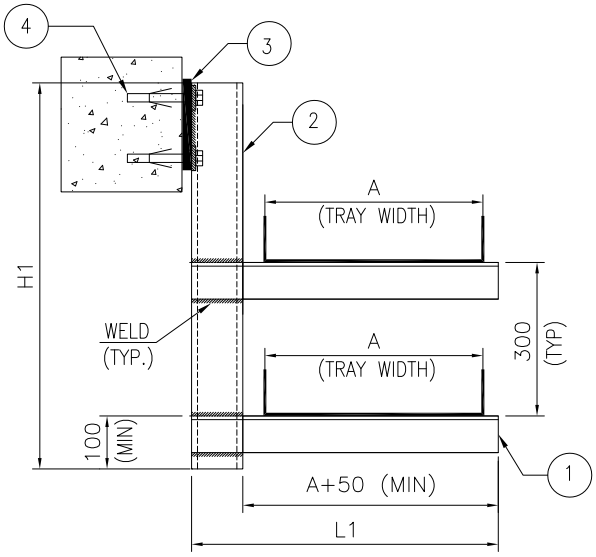

TWO HORIZONTAL TRAYS SUSPENDED FROM SIDE OF CONCRETE BEAM/COLUMN

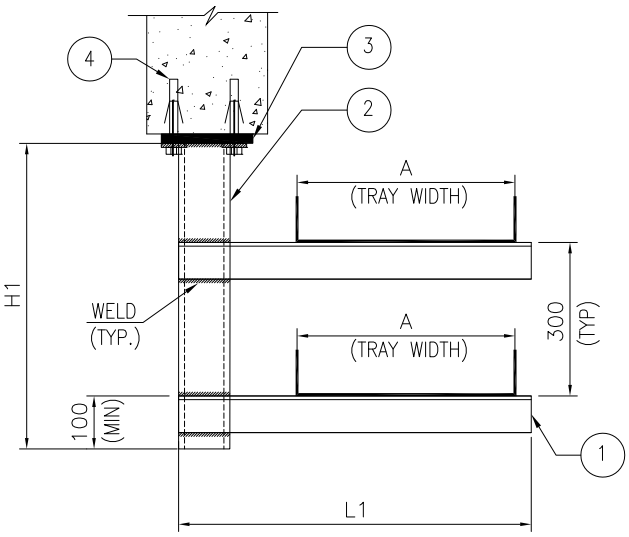

TWO HORIZONTAL TRAYS SUSPENDED FROM BOTTOM OF CONCRETE BEAM

MAX LIMITS IN DIMENSIONS	
L1	H1
800	1000

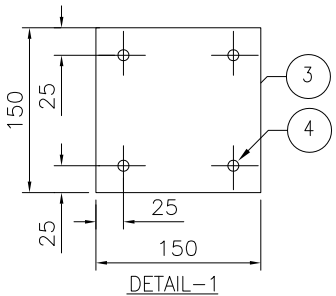

DETAIL–1

MAX LIMITS IN DIMENSIONS	
L1	H1
800	600

ITEM	DESCRIPTION	MATERIAL
1	ISA 75 (75x75x6mm)	MS PAINTED
2	ISMC 100	MS PAINTED
3	150x150x10mm THK. PLATE (REFER DETAIL–1)	MS PAINTED
4	M10 X 75 LONG HEAVY DUTY ANCHOR FASTENER WITH SUITABLE NUT & WASHER	GALVANISED STEEL/SS

NOTES

1) ALL DIMENSION ARE IN 'mm' UNLESS OTHERWISE STATED.
2) TYPICAL ARRANGEMENT IS INDICATED IN THE DRAWING.
3) GENERALLY, ALL CABLE TRAY SUPPORTS SHALL BE ENGINEERED IN COORDINATION WITH CIVIL DEPARTMENT. THIS INSTALLATION ARRANGEMENT SHALL BE FOLLOWED IN EXCEPTIONAL CASES ONLY. E.G. TRAYS ENGINEERED AFTER CIVIL INFORMATION DUE TO LACK OF INFORMATION ON PACKAGE UNIT CONSUMERS ETC.
4) STEEL SECTIONS SHALL BE PREFABRICATED & PAINTED BEFORE INSTALLATION. AREA AFFECTED DUE TO SITE WELDING SHALL BE CLEANED AND PAINTED.
5) SUPPORTING DETAILS ARE APPLICABLE FOR TRAY WIDTHS 600MM & BELOW.
6) INSERT PLATE SHALL BE ANCHORED AT THE CENTER OF THE AVAILABLE SURFACE.

DRAWING NOT TO SCALE

Code	Contract No.	Document ID	Part	Rev.
		PIN–LEP–ELT–4001		00

Rev.	Date	Name	Date	Name	Date	Name	Description	Acc. Code	Cat. Code	Acc. Code	Status
00	19.07.2017	KRP	19.07.2017	RPM	19.07.2017	RPM	ISSUED AS STANDARD				
	Drawn/Prepared	MLD	Checked		Approved						

BAR–Code

Store Location: Server/Share

Store Location: Folder

Store Name PCTS3

Pro. Unit	TON	Group	Type of Document	Sheet
				1 / 1

Con. Unit	Scale	Order No.
	NTS	

thyssenkrupp

	Date	Name
Drawn	19.07.2017	KRP
Prepared	19.07.2017	MLD
Checked	19.07.2017	RPM
Approved	19.07.2017	RPM

ISO A4

Description
INSTALLATION STANDARDS – POWER
TYPICAL DETAILS OF CABLE TRAY
SUPPORTING: TYPE–3
(PCTS3)

© thyssenkrupp Industrial Solutions (India) Private Limited 2017. All rights reserved

UH_BO_ISO_A4_P_E_tktSIndia.dwg / AG03_UH_BO_ISO_A4_P.dwg / 14.12.2016

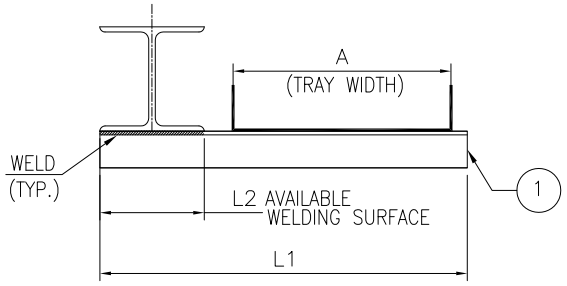

SINGLE HORIZONTAL TRAY FROM BOTTOM OF STEEL BEAM

MAX LIMITS IN DIMENSIONS		
L1	L2	H1
600	100	NA
1000	150	NA

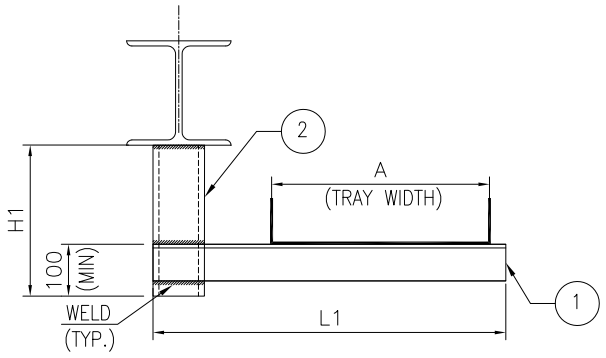

SINGLE HORIZONTAL TRAY SUSPENDED FROM BOTTOM OF STEEL BEAM

MAX LIMITS IN DIMENSIONS	
L1	H1
1000	600

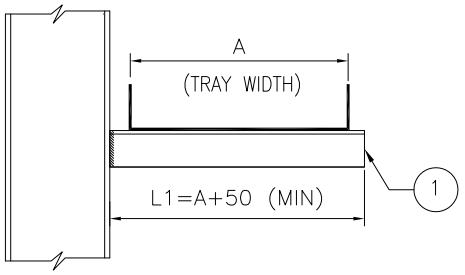

SINGLE HORIZONTAL TRAY FROM SIDE OF STEEL COLUMN/BEAM

MAX LIMITS IN DIMENSIONS	
L1	H1
1000	NA

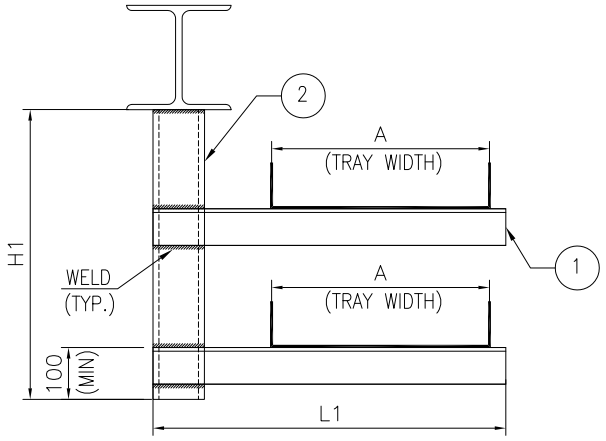

2 HORIZONTAL TRAYS SUSPENDED FROM BOTTOM OF STEEL BEAM

MAX LIMITS IN DIMENSIONS	
L1	H1
1000	600

ITEM	DESCRIPTION	MATERIAL
1	ISA 75 (75x75x6mm)	MS PAINTED
2	ISMC 100	MS PAINTED

NOTES

1) ALL DIMENSION ARE IN 'mm' UNLESS OTHERWISE STATED.
2) TYPICAL ARRANGEMENT IS INDICATED IN THE DRAWING.
3) GENERALLY, ALL CABLE TRAY SUPPORTS SHALL BE ENGINEERED IN COORDINATION WITH CIVIL DEPARTMENT. THIS INSTALLATION ARRANGEMENT SHALL BE FOLLOWED IN EXCEPTIONAL CASES ONLY. E.G. TRAYS ENGINEERED AFTER CIVIL INFORMATION DUE TO LACK OF INFORMATION ON PACKAGE UNIT CONSUMERS ETC.
4) STEEL SECTIONS SHALL BE PREFABRICATED & PAINTED BEFORE INSTALLATION. AREA AFFECTED DUE TO SITE WELDING SHALL BE CLEANED AND PAINTED.
5) SUPPORTING DETAILS ARE APPLICABLE FOR TRAY WIDTHS 600MM & BELOW.

Code	Contract No.	Document ID	Part	Rev.
		PIN-LEP-ELT-4001		00

Rev.	Date	Name (Drawn/Prepared)	Date	Name (Checked)	Date	Name (Approved)	Description	Acc. Code	Cat. Code	Acc. Code	Status
00	19.07.2017	KRP	19.07.2017	MLD	19.07.2017	RPM	ISSUED AS STANDARD				

BAR-Code

Store Location: Server/Share

Store Location: Folder

Store Name PCTS4

Pro. Unit	TON	Group	Type of Document	Sheet
				1 / 1

Con. Unit	Scale	Order No.
	NTS	

thyssenkrupp

	Date	Name
Drawn	19.07.2017	KRP
Prepared	19.07.2017	MLD
Checked	19.07.2017	RPM
Approved	19.07.2017	RPM

Description
INSTALLATION STANDARDS – POWER
TYPICAL DETAILS OF CABLE TRAY
SUPPORTING: TYPE-4
(PCTS4)

ISO A4

© thyssenkrupp Industrial Solutions (India) Private Limited 2017. All rights reserved

UH_BO_ISO_A4_P_E_tktSIndia.dwg / AG03_UH_BO_ISO_A4_P.dwg / 14.12.2016

50 mm

SINGLE VERTICAL TRAY SUPPORTED FROM CONCRETE COLUMN

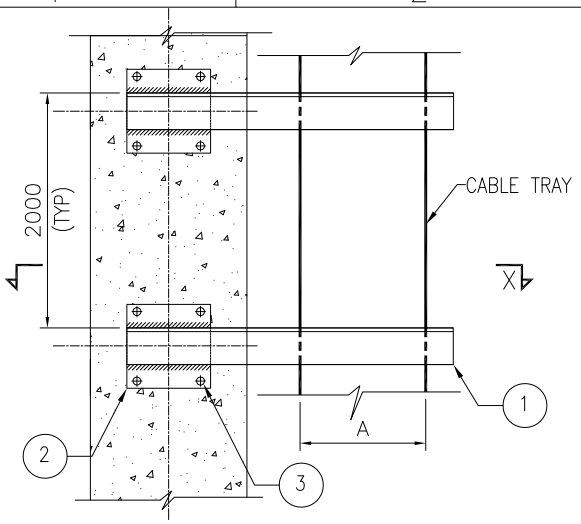

MAX LIMITS IN DIMENSIONS	
L1	H1
1000	NA

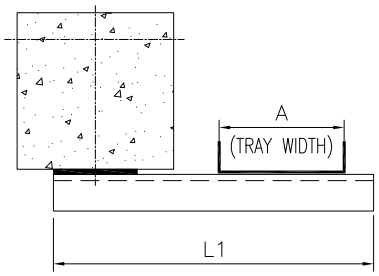

SECTION X–X

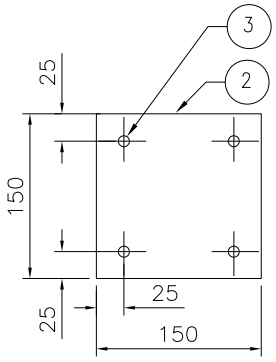

DETAIL–1

SINGLE VERTICAL TRAY SUPPORTED FROM STEEL COLUMN

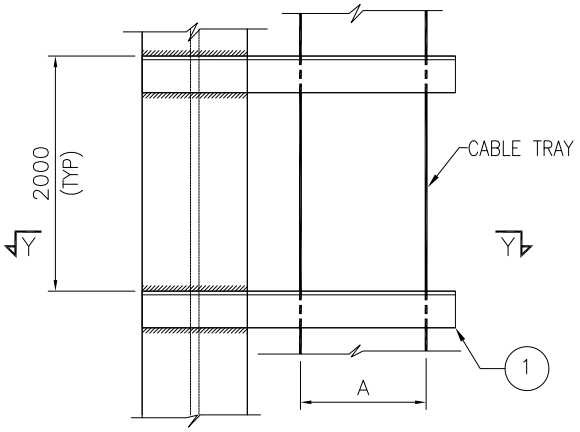

MAX LIMITS IN DIMENSIONS		
L1	L2	H1
600	100	NA
1000	150	NA

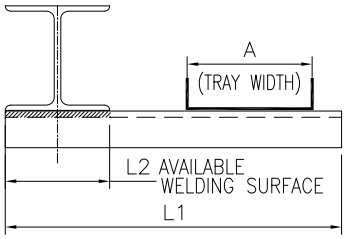

SECTION Y–Y

ITEM	DESCRIPTION	MATERIAL
1	ISA 75 (75x75x6mm)	MS PAINTED
2	150x150x10mm THK. PLATE (REFER DETAIL–1)	MS PAINTED
3	M10 X 75 LONG HEAVY DUTY ANCHOR FASTENER WITH SUITABLE NUT & WASHER	GALVANISED STEEL/SS

NOTES

1) ALL DIMENSION ARE IN 'mm' UNLESS OTHERWISE STATED.
2) TYPICAL ARRANGEMENT IS INDICATED IN THE DRAWING.
3) GENERALLY, ALL CABLE TRAY SUPPORTS SHALL BE ENGINEERED IN COORDINATION WITH CIVIL DEPARTMENT. THIS INSTALLATION ARRANGEMENT SHALL BE FOLLOWED IN EXCEPTIONAL CASES ONLY. E.G. TRAYS ENGINEERED AFTER CIVIL INFORMATION DUE TO LACK OF INFORMATION ON PACKAGE UNIT CONSUMERS ETC.
4) STEEL SECTIONS SHALL BE PREFABRICATED & PAINTED BEFORE INSTALLATION. AREA AFFECTED DUE TO SITE WELDING SHALL BE CLEANED AND PAINTED.
5) SUPPORTING DETAILS ARE APPLICABLE FOR TRAY WIDTHS 600MM & BELOW.
6) INSERT PLATE SHALL BE ANCHORED AT THE CENTER OF THE AVAILABLE SURFACE.

Code	Contract No.	Document ID	Part	Rev.
		PIN–LEP–ELT–4001		00

Rev.	Date	Name (Drawn/Prepared)	Date	Name (Checked)	Date	Name (Approved)	Description	Acc. Code	Cat. Code	Acc. Code	Status
00	19.07.2017	KRP	19.07.2017	RPM	19.07.2017	RPM	ISSUED AS STANDARD				

BAR–Code

Store Location: Server/Share

Store Location: Folder

Store Name PCTS5

Pro. Unit	TON	Group	Type of Document	Sheet
				1 / 1

Con. Unit	Scale	Order No.
	NTS	

thyssenkrupp

	Date	Name
Drawn	19.07.2017	KRP
Prepared	19.07.2017	MLD
Checked	19.07.2017	RPM
Approved	19.07.2017	RPM

Description

INSTALLATION STANDARDS – POWER
TYPICAL DETAILS OF CABLE TRAY
SUPPORTING: TYPE–5
(PCTS5)

ISO A4

© thyssenkrupp Industrial Solutions (India) Private Limited 2017. All rights reserved

UH_BO_ISO_A4_P_E_tktSIndia.dwg / AG03_UH_BO_ISO_A4_P.dwg / 14.12.2016

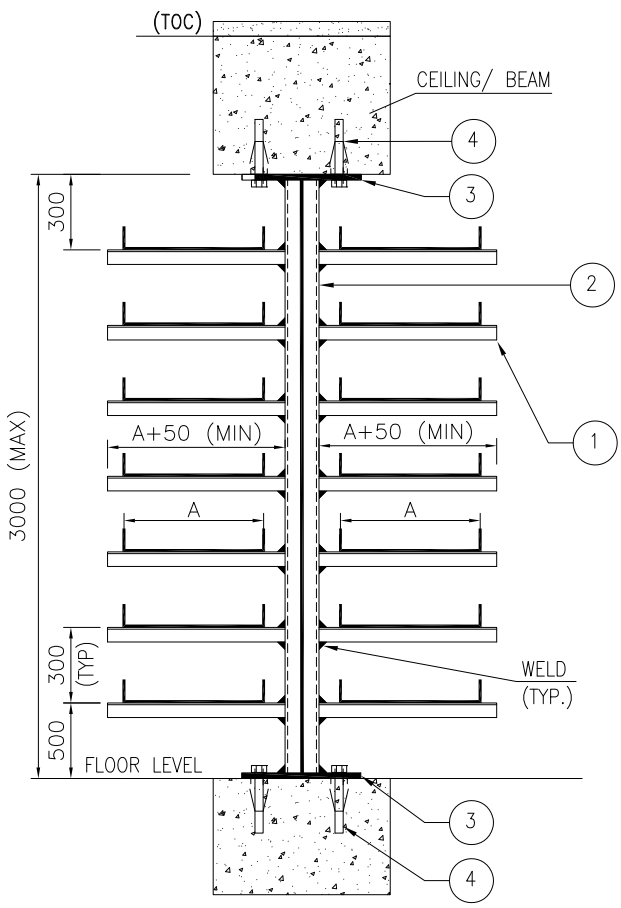

TRAY SUPPORTS IN CABLE CELLAR
VARIATION–1

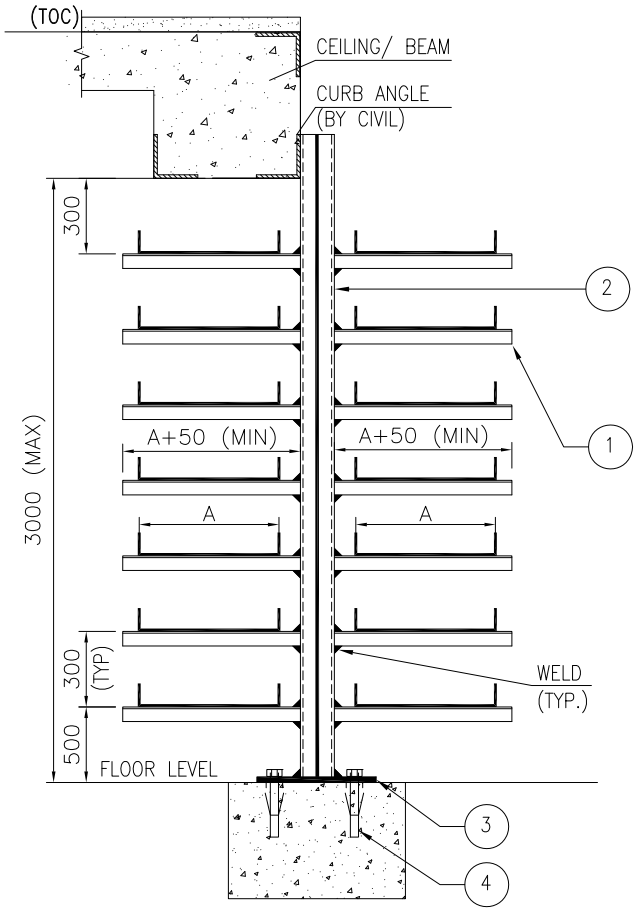

TRAY SUPPORTS IN CABLE CELLAR
VARIATION–2

ITEM	DESCRIPTION	MATERIAL
1	ISA 75 (75x75x6mm)	MS PAINTED
2	ISMC 100 BOX	MS PAINTED
3	200x200x10mm THK. PLATE (REFER DETAIL–1)	MS PAINTED
4	M10 X 75 LONG HEAVY DUTY ANCHOR FASTENER WITH SUITABLE NUT & WASHER	GALVANISED STEEL/SS

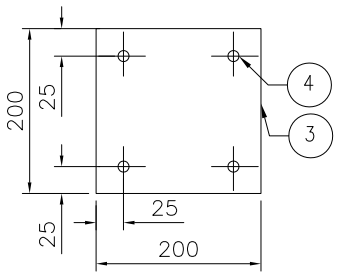

DETAIL–1

NOTES
1) ALL DIMENSION ARE IN 'mm' UNLESS OTHERWISE STATED.
2) TYPICAL ARRANGEMENT IS INDICATED IN THE DRAWING.
3) STEEL SECTIONS SHALL BE PREFABRICATED & PAINTED BEFORE INSTALLATION. AREA AFFECTED DUE TO SITE WELDING SHALL BE CLEANED AND PAINTED.

Code	Contract No.	Document ID	Part	Rev.
		PIN–LEP–ELT–4001		00

Rev.	Date	Name (Drawn/Prepared)	Date	Name (Checked)	Date	Name (Approved)	Description	Acc. Code	Cat. Code	Acc. Code	Status
00	19.07.2017	KRP	19.07.2017	RPM	19.07.2017	RPM	ISSUED AS STANDARD				

BAR–Code

Store Location: Server/Share
Store Location: Folder
Store Name PCTS6

Pro. Unit	TON	Group	Type of Document	Sheet
				1 / 1

Con. Unit	Scale	Order No.
	NTS	

thyssenkrupp

	Date	Name
Drawn	19.07.2017	KRP
Prepared	19.07.2017	MLD
Checked	19.07.2017	RPM
Approved	19.07.2017	RPM

Description
INSTALLATION STANDARDS – POWER
TYPICAL DETAILS OF CABLE TRAY
SUPPORTING IN CELLAR
(PCTS6)

ISO A4

© thyssenkrupp Industrial Solutions (India) Private Limited 2017. All rights reserved

STANDARD STEEL SECTIONS : WEIGHT AND DIMENSIONS.

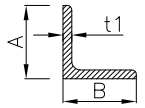

ISA (TYP)

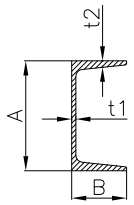

ISMC (TYP)

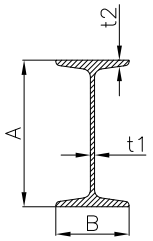

ISMB (TYP)

DESIGNATION	MASS (KG/M)	DIMENSIONS (MM)			
		A	B	t1	t2
ISA–50	4.5	50	50	6	–
ISA–65	5.8	65	65	6	–
ISA–75	6.8	75	75	6	–
ISMC–75	7.14	75	40	4.8	7.5
ISMC–100	9.56	100	50	5.0	7.7
ISMC–125	13.1	125	65	5.3	8.2
ISMC–150	16.8	150	75	5.7	9.0
ISMB–100	8.9	100	50	4.7	7.0
ISMB–125	13.3	125	70	5.0	8.0
ISMB–150	15.0	150	75	5.0	8.0

NOTE: ABOVE TABLE IS IN LINE WITH IS 808

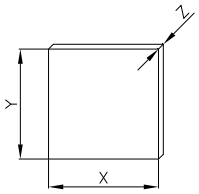

TYPICAL VIEW OF MS PLATE

WEIGHT (KG)	DIMENSIONS (MM)		
	X	Y	Z
0.79	100	100	10
1.77	150	150	10
0.59	1000	25	3

Code	Contract No.	Document ID	Part	Rev.
		PIN–LEP–ELT–4001		00

Rev.	Date	Name (Drawn/Prepared)	Date	Name (Checked)	Date	Name (Approved)	Description	Acc. Code	Cat. Code	Acc. Code	Status
00	19.07.2017	KRP MLD	19.07.2017	RPM	19.07.2017	RPM	ISSUED AS STANDARD				

BAR–Code

Store Location: Server/Share

Store Location: Folder

Store Name _

Pro. Unit	TON	Group	Type of Document	Sheet
				1 / 1

Con. Unit	Scale	Order No.
	NTS	

thyssenkrupp

	Date	Name
Drawn	19.07.2017	KRP
Prepared	19.07.2017	MLD
Checked	19.07.2017	RPM
Approved	19.07.2017	RPM

Description
INSTALLATION STANDARDS – POWER
STANDARD STEEL SECTIONS:
WEIGHT & DIMENSIONS

ISO A4

UH_BO_ISO_A4_P_E_tktSIndia.dwg / AG03_UH_BO_ISO_A4_P.dwg / 14.12.2016

© thyssenkrupp Industrial Solutions (India) Private Limited 2017. All rights reserved

INSTALLATION DETAIL-EARTHING

1. LIST OF INSTALLATION STANDARDS

Sr. No.	Description	Typical No.	Number of Sheets	Rev.
1	Main Earthing Grid conductor –Below ground typical layout	EEG1	1	0
2	Earthing conductor –Welding / Tapping details	EEG2	1	0
3	Earthing Riser from lower elevation to higher elevation details	EEG3	1	0
4	C-Connector for Round conductor	EEG4	1	0
5	Equipotential Bonding strip on concrete wall / column	EEB1	1	0
6	Equipotential Bonding strip on steel structure/column	EEB2	1	0
7	Equipotential Bonding strip on cable tray	EEB3	1	0
8	Insulated Equipotential Bonding strip on concrete wall / column	EEB4	1	0
9	Insulated Equipotential Bonding strip on steel structure/column	EEB5	1	0
10	Earthing conductor installed on cable tray	EET1	1	0
11	Earthing of Steel structure	ESS1	1	0
12	Bonding of Pipelines	EBP1	1	0
13	Earthing/Bonding of Pipelines and piperacks at tie in point	EBP2	1	0
14	Earthing of Mechanical Equipment (Tank,Vessel)	EME1	2	0
15	Earthing of Transformer with solidly Grounded Neutral	ETS1	1	0
16	Earthing of Transformer with Neutral grounding through NGR	ETN1	1	0
17	Earthing of DG SET	EDG1	1	0
18	Earthing of LV Motor on separate skid	EML1	1	0
19	Earthing of two LV Motor on common skid	EML2	1	0
20	Earthing of LV Motor on separate skid (above ground earthing)	EML3	1	0
21	Earthing of two LV Motor on common skid (above ground earthing)	EML4	1	0
22	Earthing of HV Motor	EMH1	1	0
23	Earthing of HV Motor (above ground earthing)	EMH2	1	0
24	Typical earth connection for street light pole	ESL1	1	0
25	Typical earth connection for street light pole with earth rod	ESL2	1	0
26	Earth bonding of cable trays	ETB1	1	0
27	Earth pit with HDGI pipe electrode for unpaved area	EEP1	1	0
28	Earth pit with deep rod electrode for unpaved area	EEP2	1	0
29	Earth pit with HDGI plate electrode for unpaved area	EEP3	1	0
30	Earth pit with CI plate electrode for unpaved area	EEP4	1	0
31	Earth pit with CI pipe electrode for unpaved area	EEP5	1	0
32	Earth pit with HDGI pipe electrode for paved area without forklift movement	EEP6	1	0
33	Earth pit with deep rod electrode for paved area without forklift movement	EEP7	1	0
34	Earth pit with HDGI plate electrode for paved area without forklift movement	EEP8	1	0
35	Earth pit with CI plate electrode for paved area without forklift movement	EEP9	1	0
36	Earth pit with CI pipe electrode for paved area without forklift movement	EEP10	1	0
37	Earth pit with HDGI pipe electrode for paved area with 2T capacity forklift movement	EEP11	1	0
38	Earth pit with deep rod electrode for paved area with 2T capacity forklift movement	EEP12	1	0
39	Earth pit with HDGI plate electrode for paved area with 2T capacity forklift movement	EEP13	1	0
40	Earth pit with CI plate electrode for paved area with 2T capacity forklift movement	EEP14	1	0

Sr. No.	Description	Typical No.	Number of Sheets	Rev.
41	Earth pit with CI pipe electrode for paved area with 2T capacity forklift movement	EEP15	1	0
42	Earth Pit With Cu Plate Electrode for unpaved area (EEP16)	EEP16	1	0
43	Earth Pit With Cu Plate Electrode Without forklift movement for paved area	EEP17	1	0
44	Earth Pit With Cu Plate Electrode With 2t capacity forklift for paved area	EEP18	1	0
45	Standard Detail Of Earth Pit Chamber	PIN-LEP-CVC-1013	1	0

1. General:

a. The documents/drawings as indicated below shall be prepared by the LSTK Contractor as a part of detail Engineering.

b. These notes shall be read and construed in conjunction with Earthing Protection layout drawings and Installation Standards – Earthing.

c. The resistance of the earth electrode system to the general body of earth must not exceed 1 Ohm.

d. The voltage gradient in and near the substation should limit "touch" and "step" voltages to safe values as defined in IEEE 80.

e. All metallic objects within the boundaries of the substation shall be bonded together by means of equipotential conductors.

f. The earth electrode conductor shall be capable of carrying the maximum earth fault current continuously without overheating, mechanical damage or unduly drying the soil around buried conductors.

g. Prior to design of the earthing system, an earth resistivity test shall be carried out. The test shall allow for the seasonal variation of the earth resistivity.

h. Metallic fences erected to prevent unauthorised access to a substation shall be connected to the substation earth electrode system. A grading wire should be buried at a distance of 1 m outside the fence. The fence shall be bonded to the grading wire and to the substation earth electrode system.

2. Earth pits:

a. Each earth pit shall be connected to earth grid/ bus through two numbers of main earthing conductors.

b. Minimum 6000 mm spacing between plate/ pipe electrodes shall be provided.

c. Clearance for construction of earth pit shall be obtained from Engineer-In-Charge before commencement of excavation. Civil and Mechanical groups shall be consulted.

d. Earth pit designation identification shall be marked on the top cover. Further on bottom of the cover, earth pit designation identification with earth pit resistance and date of testing shall be marked.

3. Routing of earthing conductor:

a. Underground buried earthing conductor shall be laid at least 600 mm below ground/ finished floor level. Earthing conductor shall be routed at least 1000 mm away from the building. Buried conductors shall be brought 500 mm above ground/ finished floor level for making further connections.

b. All earthing conductors crossing road shall be routed through Hume pipes/ GI pipes. Wherever earthing conductor crosses drains, trenches or pipelines, it shall be laid minimum 300 mm below the same.

c. Earthing conductor on concrete floor shall be routed below the screed (IPS) of the floor.

d. Earthing cable/ conductor above ground shall preferably be routed in cable trays wherever available. Otherwise earthing cable/ conductor shall be routed on wall/ structure using GI spacers (min. 3 mm thick) and saddles (min. 2.5 mm thick) at interval of 300 mm.

e. Wherever earthing conductor passes through walls, floors, etc., galvanized conduit sleeves shall be provided for the passage of the conductor. Both ends of the sleeve shall be sealed to prevent the passage of water through the sleeves. Water stops shall be provided wherever earthing conductor enters the building from outside, below grade level. Necessary sealing compound shall be supplied by Contractor as part of the installation rate.

f. Wherever possible, all earthing conductors for electrical equipment shall be dressed/ clamped along with the power/ control cable for the equipment.

4. Equipment and structure earthing:

a. Piperack and Building steel columns shall be earthed at every 20 meters (maximum). In case the height is greater than 20 meters, higher elevation shall also be earthed at every 20 meters.

b. Walkways, railings and other steel parts located on the top of buildings and fastened to concrete structures shall be solidly connected to the earthing system at spacing's not to exceed 15 m. Concrete reinforcement and embedded hold-down bolts shall not be used as the sole means of earthing. All walkways and railings shall be electrically bonded throughout their complete length.

c. Cable trays shall be earthed at every 50 meters on piperack (maximum). In general cable trays shall be earthed at start and end.

d. Earthing continuity bonding across pipe line flanges shall be provided for pipe lines as indicated in the respective earthing drawings. These lines shall be bonded to nearby earth bus at flanged joints nearest to the two ends of each line and at intermediate joints at intervals not exceeding 50 meters.

e. LCS & 1 phase socket (16A/ 20A) shall be earthed externally at one point.

f. Equipment receiving single phase power supply such as light fixtures, socket (5A), ceiling/ exhaust fans, lighting junction boxes, etc. shall be earthed through third core of the power supply cable. No separate external earthing is required.

g. Metallic screens, armour of all multicore MV cables shall be earthed at both ends. In general single core MV cables, armour/screen shall be earthed only at one end (source end); for long length of single core MV/ HV cables, vendor documentation shall be referred.

h. Metallic screens, armour of all multicore LV cables shall be earthed at both ends through cable glands. For single core LV cables, armour/ screen shall be earthed only at one end (source end).

i. EOT crane and other movable equipment fed from power conductor system shall be connected to earth through the PE conductor of the crane power supply cable & down shop lead. In addition, rails of monorail and crane shall also be earthed.

j. Locations of earthing connections shown for equipment are indicative. Earthing conductor shall be laid and routed to match the orientation of the cleats on the equipment.

k. Metallic conduits and pipes shall not be used as earth continuity conductor.

l. Flexible earthing leads shall be provided for earthing the equipment on moving platforms.

5. Earthing connections:

a. All contact surfaces shall be free from scale, paint, enamel, grease, rust or dirt before connection is made.

b. All connections of earthing conductor shall be welded or bolted with appropriate hardware. In case of copper earthing conductor the same shall be brazed or bolted with Stain steel (SS 304) hardware.

c. When wires are used as earth conductor same shall be connected by crimping type lugs. Tinned copper lugs shall be used in case of copper cables.

d. Whether specifically shown in drawings or not, metallic stairs, hand-rails, etc, shall be connected to the nearby earthing grid by one earthing lead. Electrical continuity shall be ensured by bonding the different sections of hand-rails and metallic stairs.

e. All underground bolted/ clamped & welded connections shall be protected against corrosion using tape/ bitumen compound.

f. All welded joints shall be cleaned and applied with anti-corrosive treatment. Above ground welded joints shall be painted with two coats of primer and silver paint.

g. Cutting of strip or drilling holes on strip shall be carried out using hack saw, drilling machines. Gas cutting is not permissible for the same.

h. Earth cleats for earthing of structural steel shall be welded on the steel column wherever the same are not available. The earth cleats shall be welded by the LSTK Contractor before the steel columns are fire proofed wherever applicable.

6. Special requirement:

a. Since earthing is the major concern in hilly areas, due to long geographical terrain with high resistivity and large weather cycles, maintenance free chemical earthing shall be provided wherever required apart from standard earthing design.

b. For all switchboards and transformers, chemical earthing system, if required, shall be considered instead of conventional earthing.

UH_BO_ISO_A4_P_E_tktSIndia.dwg / AG03_UH_BO_ISO_A4_P.dwg / 14.12.2016

ITEM	DESCRIPTION	MATERIAL	QTY.	SUPPLY BY	INSTALLATION BY
1	EARTHING CONDUCTOR	---	AS REQUIRED	ELECTRICAL CONTRACTOR	ELECTRICAL CONTRACTOR

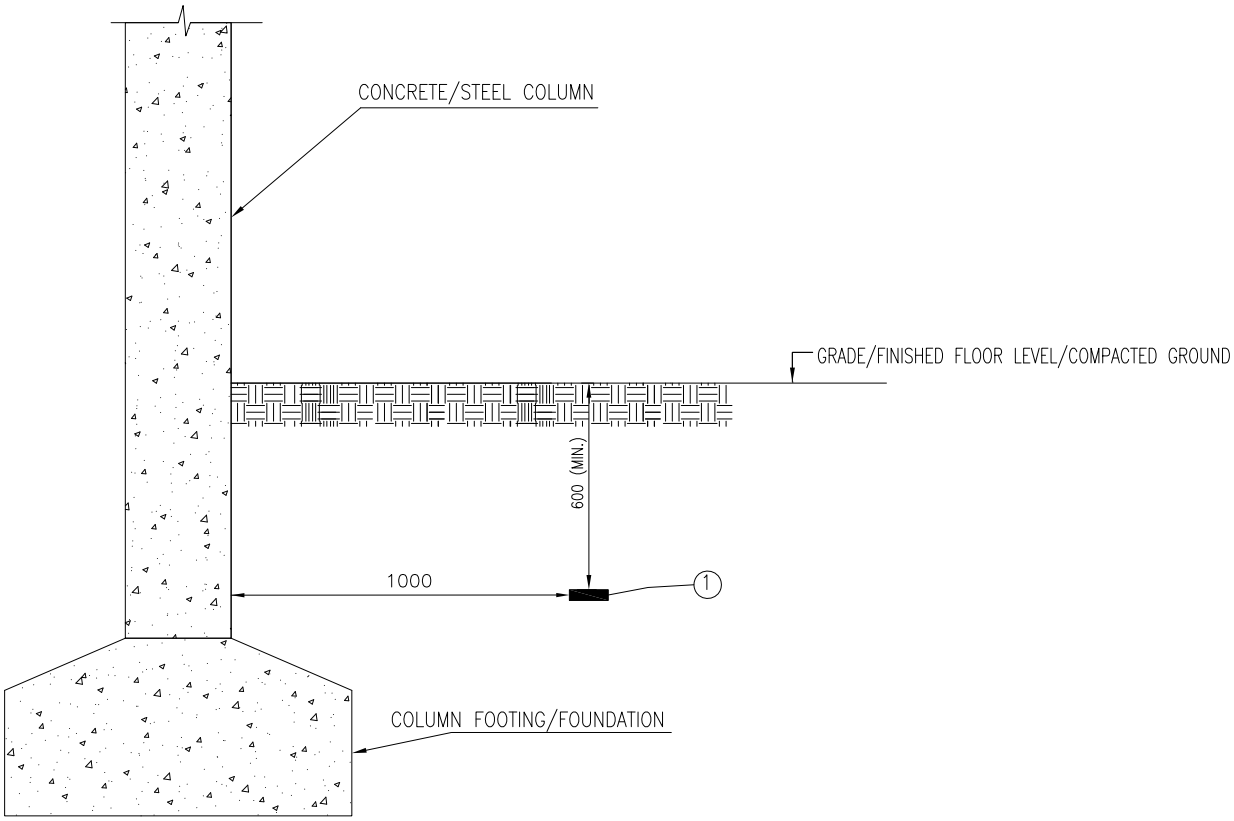

DRAWING NOT TO SCALE

NOTES:
1) ALL DIMENSIONS ARE IN 'mm' UNLESS OTHERWISE SPECIFIED.
2) SIZE OF EARTHING CONDUCTOR SHALL BE AS PER THE 'EARTHING SCHEDULE' FOR THE PROJECT.
3) ALL UNDERGROUND WELDED CONNECTIONS SHALL BE PROTECTED AGAINST CORROSION USING TAPE OR BITUMEN COMPOUND.

Code	Contract No.	Document ID	Part	Rev.
		PIN-LEP-ELT-4002		00

Rev.	Date	Name (Drawn/Prepared)		Date	Name (Checked)		Date	Name (Approved)		Description	Acc. Code	Cat. Code	Acc. Code	Status
00	29/10/15	RDK	ANK	29/10/15	RPM		29/10/15	RPM		ISSUED AS STANDARD				

BAR-Code

Store Location: Server/Share

Store Location: Folder

Store Name
EEG1

Pro. Unit	TON	Group	Type of Document	Sheet
				1 / 1

Con. Unit	Scale	Order No.
	NTS	

thyssenkrupp

	Date	Name
Drawn	29/10/15	RDK
Prepared	29/10/15	ANK
Checked	29/10/15	RPM
Approved	29/10/15	RPM

Description
INSTALLATION STANDARDS – EARTHING
MAIN EARTHING GRID CONDUCTOR
BELOW GROUND TYPICAL LAYOUT
(EEG1)

ISO A4

© thyssenkrupp Industrial Solutions (India) Private Limited 2017. All rights reserved

UH_BO_ISO_A4_P_E_tktSIndia.dwg / AG03_UH_BO_ISO_A4_P.dwg / 14.12.2016

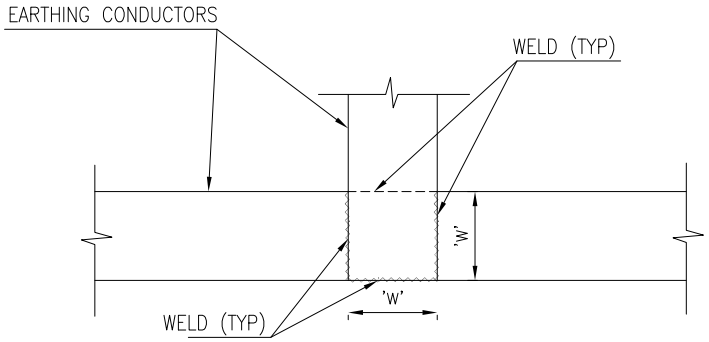

WELD/TAPPING DETAILS

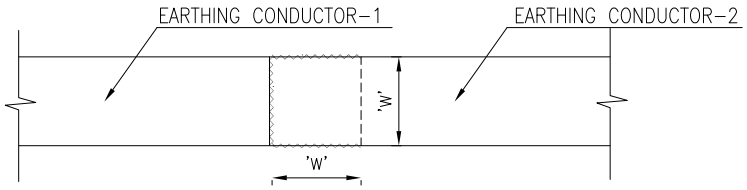

WELD/TAPPING DETAILS

NOTES:

1) WELDING SHALL BE DONE ON ALL SIDES OF EARTHING CONDUCTOR
2) AFTER WELDING SURFACE SHALL BE CLEANED AND APPLIED WITH ANTI-CORROSIVE TREATMENT (BITUMEN COMPOUND).
3) SIZE OF EARTHING CONDUCTOR SHALL BE AS PER THE 'EARTHING SCHEDULE' FOR THE PROJECT.

Code	Contract No.	Document ID	Part	Rev.
		PIN-LEP-ELT-4002		00

Rev.	Date	Name (Drawn/Prepared)		Date	Name (Checked)		Date	Name (Approved)		Description	Acc. Code	Cat. Code	Acc. Code	Status
00	29/10/15	RDK	ANK	29/10/15	RPM		29/10/15	RPM		ISSUED AS STANDARD				

BAR-Code

Store Location: Server/Share

Store Location: Folder

Store Name: EEG2

Pro. Unit	TON	Group	Type of Document	Sheet
				1 / 1

Con. Unit	Scale	Order No.
	NTS	

thyssenkrupp

	Date	Name
Drawn	29/10/15	RDK
Prepared	29/10/15	ANK
Checked	29/10/15	RPM
Approved	29/10/15	RPM

Description
INSTALLATION STANDARDS – EARTHING
EARTHING CONDUCTOR
WELDING / TAPPING DETAILS
(EEG2)

ISO A4

© thyssenkrupp Industrial Solutions (India) Private Limited 2017. All rights reserved

UH_BO_ISO_A4_P_E_tktSIndia.dwg / AG03_UH_BO_ISO_A4_P.dwg / 14.12.2016

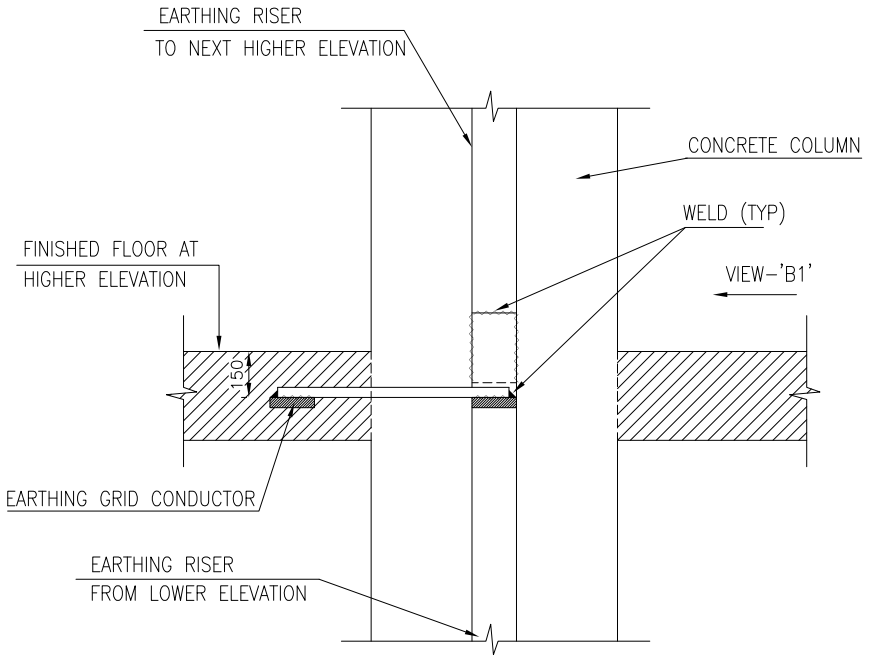

EARTHING RISER FROM LOWER ELEVATION TO HIGHER ELEVATION

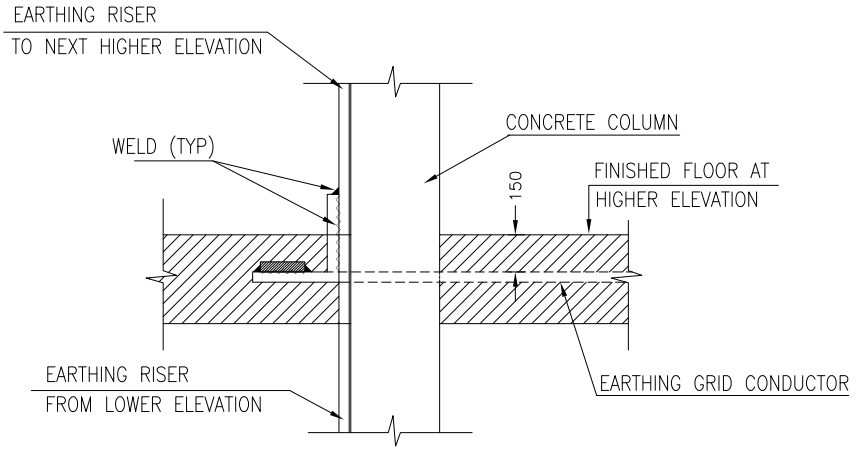

VIEW–'B1' (TYP)

NOTES:

1) WELDING SHALL BE DONE ON ALL SIDES OF EARTHING CONDUCTOR
2) AFTER WELDING SURFACE SHALL BE CLEANED AND APPLIED WITH ANTI–CORROSIVE TREATMENT (BITUMEN COMPOUND).
3) SIZE OF EARTHING CONDUCTOR SHALL BE AS PER THE 'EARTHING SCHEDULE' FOR THE PROJECT.
4) EARTHING CONDUCTOR SHALL BE ROUTED USING SADDLES/CLAMPING AT INTERVAL OF 300mm.

Code	Contract No.	Document ID	Part	Rev.
		PIN–LEP–ELT–4002		00

Rev.	Date	Name (Drawn/Prepared)	Date	Name (Checked)	Date	Name (Approved)	Description	Acc. Code	Cat. Code	Acc. Code	Status
00	29/10/15	RDK ANK	29/10/15	RPM	29/10/15	RPM	ISSUED AS STANDARD				

BAR–Code

Store Location: Server/Share

Store Location: Folder

Store Name
EEG3

Pro. Unit	TON	Group	Type of Document	Sheet
				1 / 1

Con. Unit	Scale	Order No.
	NTS	

thyssenkrupp

	Date	Name
Drawn	29/10/15	RDK
Prepared	29/10/15	ANK
Checked	29/10/15	RPM
Approved	29/10/15	RPM

Description
INSTALLATION STANDARDS – EARTHING
EARTHING RISER FROM LOWER ELEVATION
TO HIGHER ELEVATION DETAILS
(EEG3)

ISO A4

© thyssenkrupp Industrial Solutions (India) Private Limited 2017. All rights reserved

UH_BO_ISO_A4_P_E_tktSIndia.dwg / AG03_UH_BO_ISO_A4_P.dwg / 14.12.2016

ITEM	DESCRIPTION	MATERIAL	QTY.	SUPPLY BY	INSTALLATION BY
1	C-CONNECTOR FOR ROUND CONDUCTOR	TINNED CU/ ALUMINUM	AS REQUIRED	ELECTRICAL CONTRACTOR	ELECTRICAL CONTRACTOR

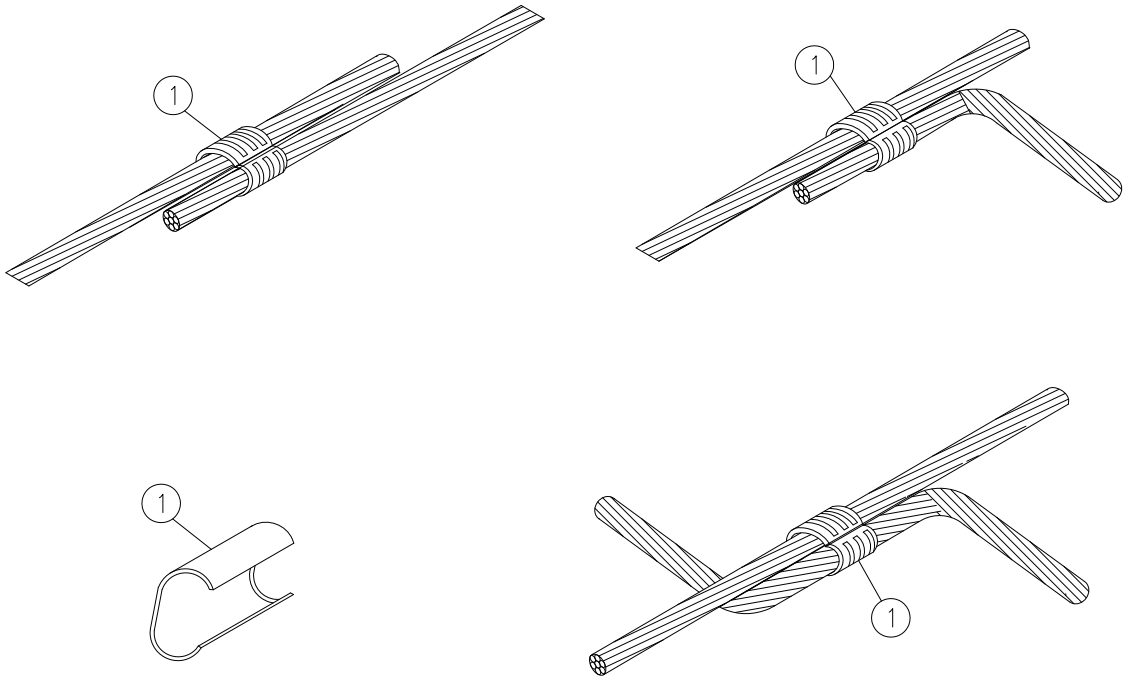

DRAWING NOT TO SCALE

NOTES

1) ALL DIMENSIONS ARE IN 'mm' UNLESS OTHERWISE SPECIFIED.
2) SIZE OF EARTHING CONDUCTORS SHALL BE AS PER THE 'EARTHING SCHEDULE' FOR THE PROJECT.
3) ALL SUCH CONNECTION BELOW GROUND SHALL BE PROTECTED WITH THE THE HELP OF CORROSION PROTECTION TAPE WITH BITUMEN COATING ABOVE

Code	Contract No.	Document ID	Part	Rev.
		PIN-LEP-ELT-4002		00

Rev.	Date	Name (Drawn/Prepared)		Date	Name (Checked)		Date	Name (Approved)		Description	Acc. Code	Cat. Code	Acc. Code	Status
00	04/01/17	KRP	PMT	04/01/17	RPM		04/01/17	RPM		ISSUED AS STANDARD				

BAR-Code

Store Location: Server/Share

Store Location: Folder

Store Name EEG4

Pro. Unit	TON	Group	Type of Document	Sheet
				1 / 1

Con. Unit	Scale	Order No.
	NTS	

thyssenkrupp

	Date	Name
Drawn	04/01/17	KRP
Prepared	04/01/17	PMT
Checked	04/01/17	RPM
Approved	04/01/17	RPM

Description

INSTALLATION STANDARDS – EARTHING C-CONNECTOR FOR ROUND CONDUCTOR (EEG4)

ISO A4

© thyssenkrupp Industrial Solutions (India) Private Limited 2017. All rights reserved

ITEM	DESCRIPTION	MATERIAL	QTY.	SUPPLY BY	INSTALLATION BY
1	EQUIPOTENTIAL BONDING STRIP(EARTH BUS)–600(L)x75(W)x10(T)	HDGI	1 NO.	ELECTRICAL CONTRACTOR	ELECTRICAL CONTRACTOR
2	ISMC 100 WITH 12 DIA HOLES ON FLANGE SIDE, PAINTED AS PER PROJECT STANDARD	MS PAINTED	2 NOS. 80 mm	REFER NOTE–4	
3	M8 x 60mm LONG ANCHOR FASTENER, WITH SUITABLE NUT & WASHERS	GALVANISED STEEL/SS	2 SETS	ELECTRICAL CONTRACTOR	ELECTRICAL CONTRACTOR
4	10 DIA 50 LONG HEXAGONAL HEAD BOLTS WITH NUTS,SPRING & PLAIN WASHERS, SUITABLE FOR CONNECTIONS SHOWN IN THIS DRAWING (REFER DETAIL–1)	G.I.	10 SETS	ELECTRICAL CONTRACTOR	ELECTRICAL CONTRACTOR
5	6 DIA 40 LONG HEXAGONAL HEAD BOLTS WITH NUTS,SPRING & PLAIN WASHERS, SUITABLE FOR CONNECTIONS SHOWN IN THIS DRAWING (REFER DETAIL–1)	G.I.	4 SETS	ELECTRICAL CONTRACTOR	ELECTRICAL CONTRACTOR

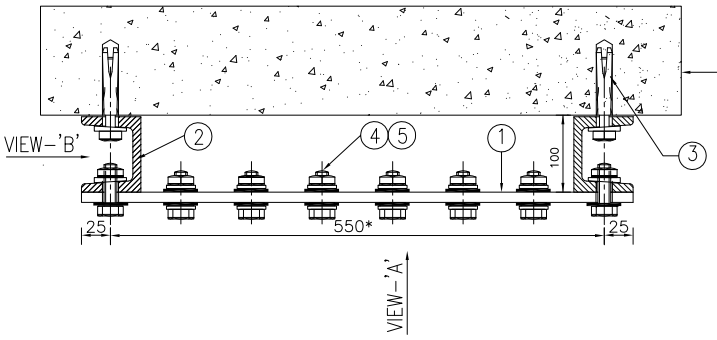

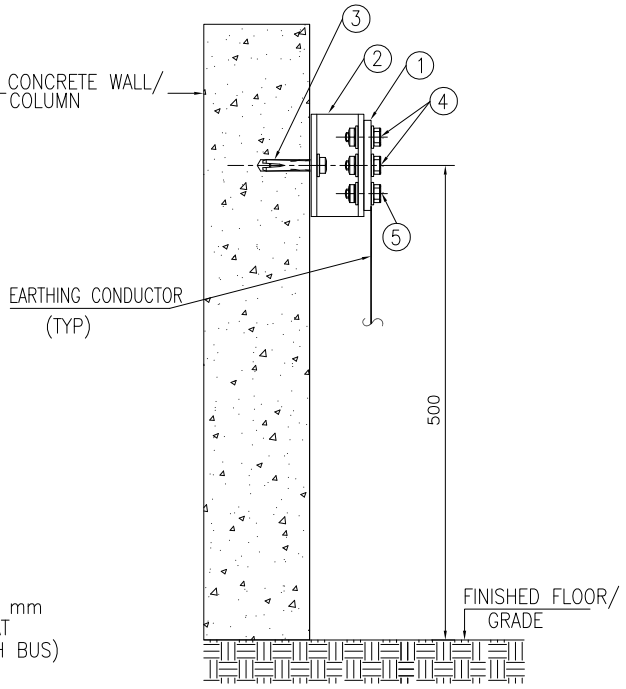

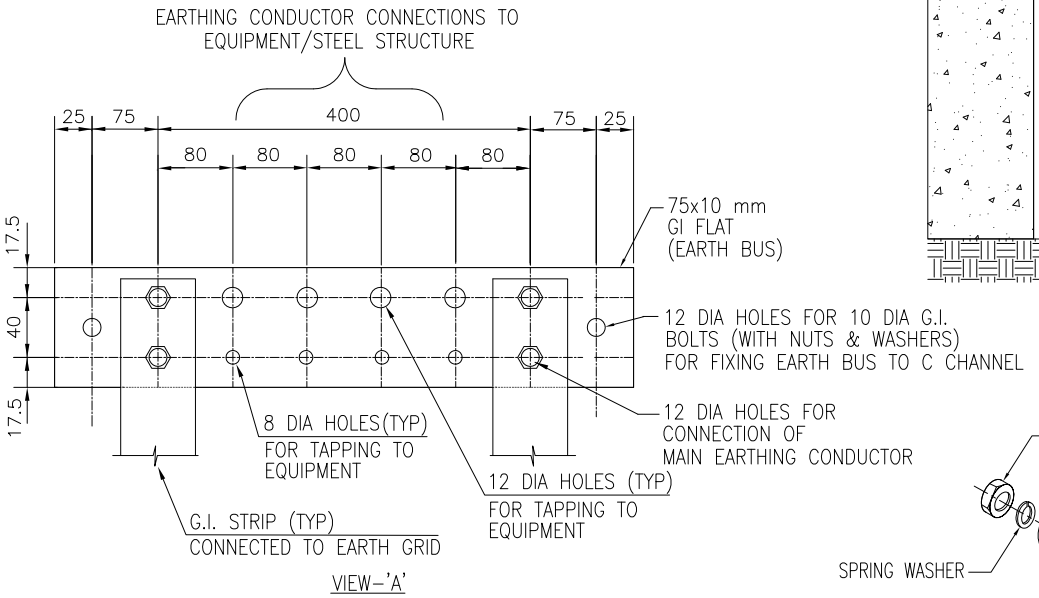

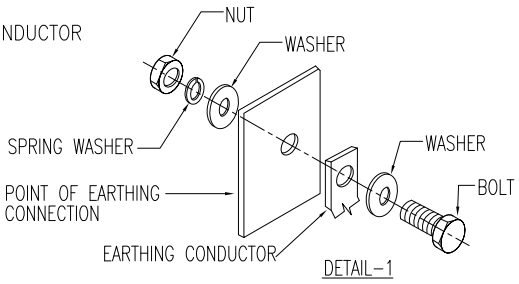

NOTES:
1) ALL DIMENSIONS ARE IN 'mm' UNLESS OTHERWISE SPECIFIED.
2) SIZE OF EARTHING CONDUCTOR SHALL BE AS PER THE 'EARTHING SCHEDULE' FOR THE PROJECT.
3) * DISTANCE BETWEEN "C" CHANNEL CAN BE MODIFIED TO SUIT COLUMN WIDTH.
4) SUPPLY & INSTALLATION OF STEEL IS NOT PART OF THIS INSTALLATION ARRANGEMENT. SAME IS COVERED ELSEWHERE.

DRAWING NOT TO SCALE

Code	Contract No.	Document ID	Part	Rev.
		PIN–LEP–ELT–4002		00

Rev.	Date	Name (Drawn/Prepared)		Date	Name (Checked)		Date	Name (Approved)	Description	Acc. Code	Cat. Code	Acc. Code	Status
00	29/10/15	RDK	ANK	29/10/15	RPM		29/10/15	RPM	ISSUED AS STANDARD				

BAR–Code

Store Location: Server/Share

Store Location: Folder

Store Name: EEB1

Pro. Unit	TON	Group	Type of Document	Sheet
				1 / 1

Con. Unit	Scale	Order No.
	NTS	

thyssenkrupp

	Date	Name
Drawn	29/10/15	RDK
Prepared	29/10/15	ANK
Checked	29/10/15	RPM
Approved	29/10/15	RPM

Description
INSTALLATION STANDARDS – EARTHING EQUIPOTENTIAL BONDING STRIP ON CONCRETE WALL/COLUMN (EEB1)

ISO A4

UH_BO_ISO_A4_P_E_tktSIndia.dwg / AG03_UH_BO_ISO_A4_P.dwg / 14.12.2016

© thyssenkrupp Industrial Solutions (India) Private Limited 2017. All rights reserved

ITEM	DESCRIPTION	MATERIAL	QTY.	SUPPLY BY	INSTALLATION BY
1	EQUIPOTENTIAL BONDING STRIP(EARTH BUS)-600(L)x75(W)x10(T)	HDGI	1 NO.	ELECTRICAL CONTRACTOR	ELECTRICAL CONTRACTOR
2	ISMC 100 WITH 12 DIA HOLES ON FLANGE SIDE, PAINTED AS PER PROJECT STANDARD	MS PAINTED	2 NOS. 80 mm	REFER NOTE-5	
3	10 DIA, 50 LONG HEXAGONAL HEAD BOLTS WITH NUTS,SPRING & PLAIN WASHERS, SUITABLE FOR CONNECTIONS SHOWN IN THIS DRAWING (REFER DETAIL-1)	G.I.	10 SETS	ELECTRICAL CONTRACTOR	ELECTRICAL CONTRACTOR
4	6 DIA, 40 LONG HEXAGONAL HEAD BOLTS WITH NUTS,SPRING & PLAIN WASHERS, SUITABLE FOR CONNECTIONS SHOWN IN THIS DRAWING (REFER DETAIL-1)	G.I.	4 SETS	ELECTRICAL CONTRACTOR	ELECTRICAL CONTRACTOR

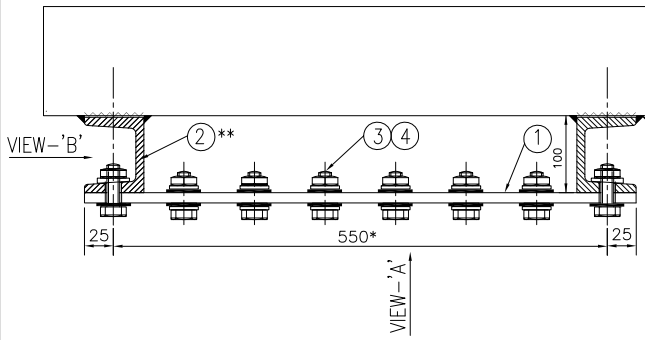

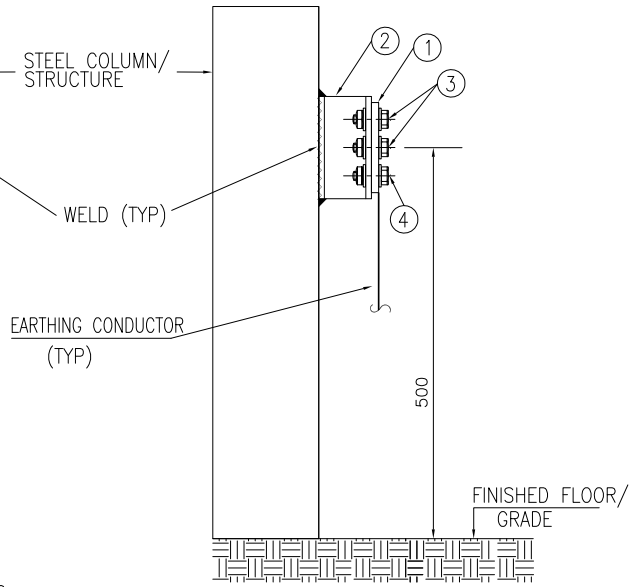

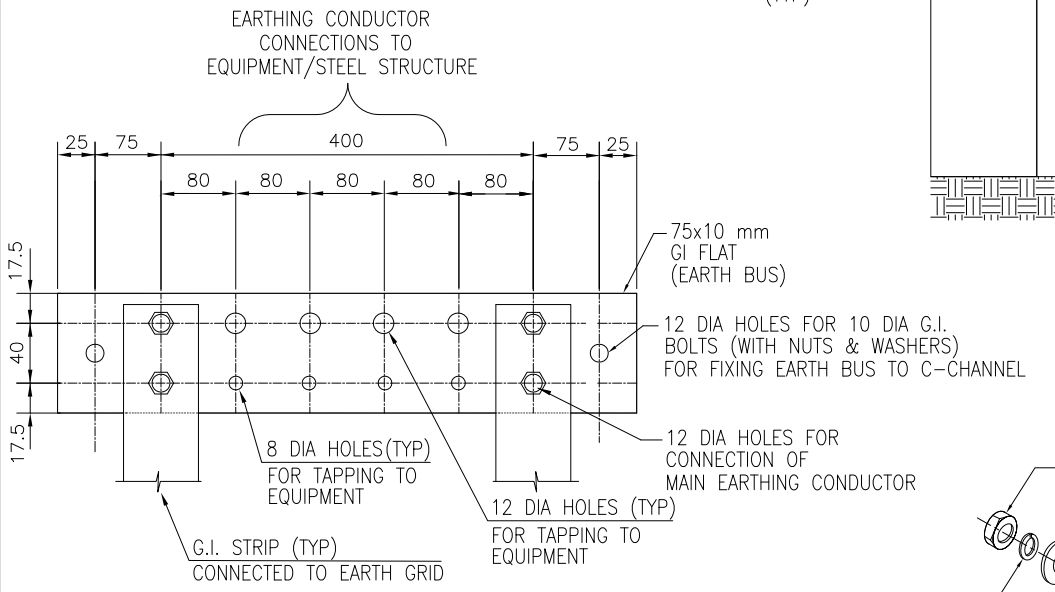

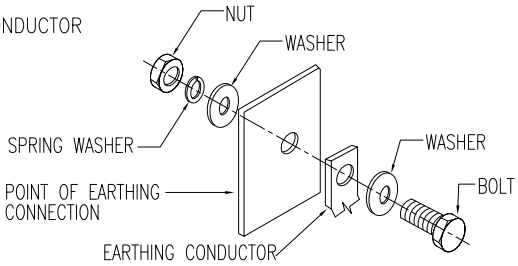

DETAIL-1

NOTES:

1) ALL DIMENSIONS ARE IN 'mm' UNLESS OTHERWISE SPECIFIED.
2) SIZE OF EARTHING CONDUCTOR SHALL BE AS PER THE 'EARTHING SCHEDULE' FOR THE PROJECT.
3) * DISTANCE BETWEEN "C" CHANNEL CAN BE MODIFIED TO SUIT COLUMN WIDTH.
4) ** INCASE OF FIREPROOFING REQUIREMENT EXTRA "C" CHANNEL ALONGWITH FIXING NUTBOLTS SHALL BE CONSIDERED.
5) SUPPLY & INSTALLATION OF STEEL IS NOT PART OF THIS INSTALLATION ARRANGEMENT. SAME IS COVERED ELSEWHERE.

DRAWING NOT TO SCALE

Code	Contract No.	Document ID	Part	Rev.
		PIN-LEP-ELT-4002		00

Rev.	Date	Name (Drawn/Prepared)		Date	Name (Checked)		Date	Name (Approved)	Description	Acc. Code	Cat. Code	Acc. Code	Status
00	29/10/15	RDK	ANK	29/10/15	RPM		29/10/15	RPM	ISSUED AS STANDARD				

BAR-Code

Store Location: Server/Share

Store Location: Folder

Store Name: EEB2

Pro. Unit	TON	Group	Type of Document	Sheet
				1 / 1

Con. Unit	Scale	Order No.
	NTS	

thyssenkrupp

	Date	Name
Drawn	29/10/15	RDK
Prepared	29/10/15	ANK
Checked	29/10/15	RPM
Approved	29/10/15	RPM

Description: INSTALLATION STANDARDS – EARTHING EQUIPOTENTIAL BONDING STRIP ON STEEL STRUCTURE/COLUMN (EEB2)

ISO A4

UH_BO_ISO_A4_P_E_tktSIndia.dwg / AG03_UH_BO_ISO_A4_P.dwg / 14.12.2016

© thyssenkrupp Industrial Solutions (India) Private Limited 2017. All rights reserved

ITEM	DESCRIPTION	MATERIAL	QTY.	SUPPLY BY	INSTALLATION BY
1	EQUIPOTENTIAL BONDING STRIP(EARTH BUS)–600(L)x75(W)x10(T)	HDGI	1 NO.	ELECTRICAL CONTRACTOR	ELECTRICAL CONTRACTOR
2	10 DIA 50 LONG HEXAGONAL HEAD BOLTS WITH NUTS,SPRING WASHERS & WASHERS SUITABLE FOR CONNECTIONS SHOWN IN THIS DRAWING (REFER DETAIL–1)	G.I.	12 SETS	ELECTRICAL CONTRACTOR	ELECTRICAL CONTRACTOR
3	6 DIA 40 LONG HEXAGONAL HEAD BOLTS WITH NUTS,SPRING WASHERS & WASHERS SUITABLE FOR CONNECTIONS SHOWN IN THIS DRAWING (REFER DETAIL–1)	G.I.	4 SETS	ELECTRICAL CONTRACTOR	ELECTRICAL CONTRACTOR

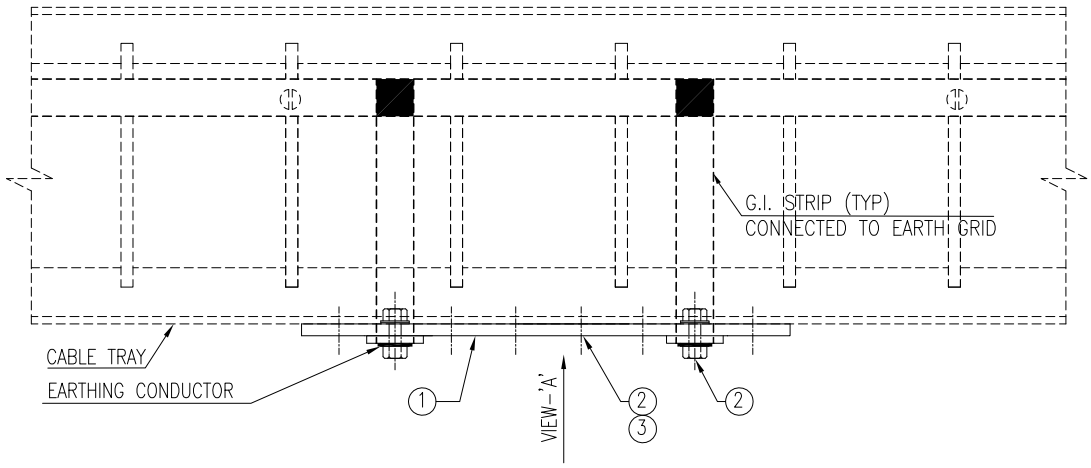

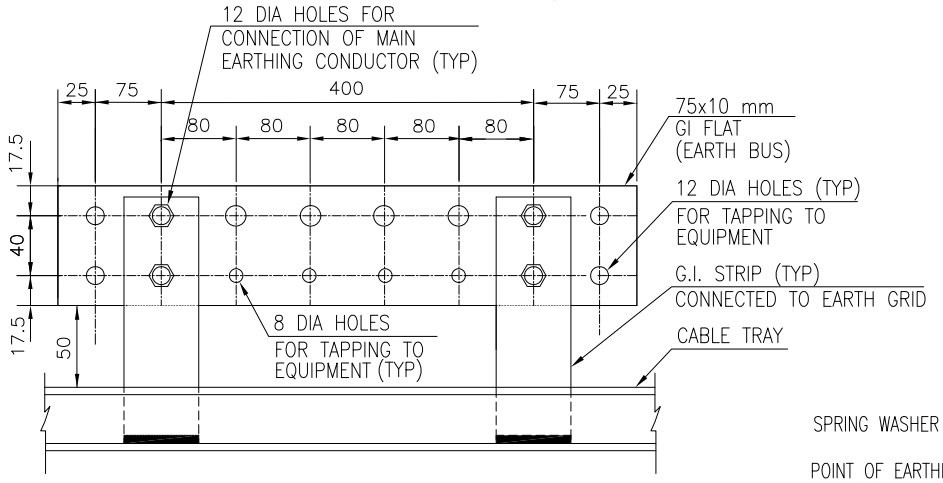

VIEW–'A'

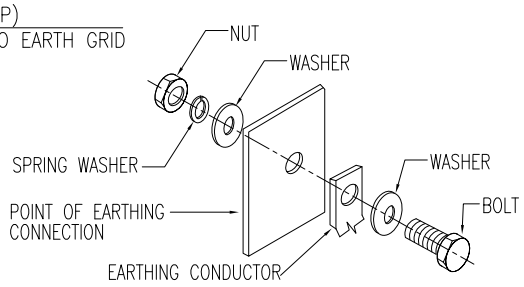

DETAIL–1

NOTES

1) ALL DIMENSIONS ARE IN 'mm' UNLESS OTHERWISE SPECIFIED.
2) 75x10mm EARTHING CONDUCTOR SHALL BE FIXED ON THE CABLE TRAY RUNGS EITHER BY MEANS OF MUSHROOM HEAD SCREWS, AS SHOWN ABOVE, OR WITH CLAMPS AT AN INTERVAL NOT EXCEEDING 1 MTR.
3) EQUIPOTENTIAL BONDING STRIPS ON CABLE TRAYS SHALL BE USED FOR TAPPING EARTHING CONNECTIONS FOR LV MOTORS AND OTHER POWER AND CONTROL EQUIPMENT.
4) SIZE OF EARTHING CONDUCTOR SHALL BE AS PER THE 'EARTHING SCHEDULE' FOR THE PROJECT.

DRAWING NOT TO SCALE

Code	Contract No.	Document ID	Part	Rev.
		PIN–LEP–ELT–4002		00

Rev.	Date	Name (Drawn/Prepared)		Date	Name (Checked)		Date	Name (Approved)	Description	Acc. Code	Cat. Code	Acc. Code	Status
00	29/10/15	RDK	ANK	29/10/15	RPM		29/10/15	RPM	ISSUED AS STANDARD				

BAR–Code

Store Location: Server/Share

Store Location: Folder

Store Name: EEB3

Pro. Unit	TON	Group	Type of Document	Sheet
				1 / 1

Con. Unit	Scale	Order No.
	NTS	

thyssenkrupp

	Date	Name
Drawn	29/10/15	RDK
Prepared	29/10/15	ANK
Checked	29/10/15	RPM
Approved	29/10/15	RPM

Description
INSTALLATION STANDARDS – EARTHING EQUIPOTENTIAL BONDING STRIP ON CABLE TRAY (EEB3)

ISO A4

UH_BO_ISO_A4_P_E_tktSIndia.dwg / AG03_UH_BO_ISO_A4_P.dwg / 14.12.2016

© thyssenkrupp Industrial Solutions (India) Private Limited 2017. All rights reserved

UH_BO_ISO_A4_P_E_tktSIndia.dwg / AG03_UH_BO_ISO_A4_P.dwg / 14.12.2016

ITEM	DESCRIPTION	MATERIAL	QTY.	SUPPLY BY	INSTALLATION BY
1	EQUIPOTENTIAL BONDING STRIP(EARTH BUS)–600(L)x75(W)x10(T)	HDGI/ TINNED Cu	1 NO.	ELECTRICAL CONTRACTOR	ELECTRICAL CONTRACTOR
2	ISMC 100 WITH 12 DIA HOLES ON FLANGE SIDE, PAINTED AS PER PROJECT STANDARD	MS PAINTED	2 NOS. 80mm	REFER NOTE–4	
3	M8 x 60mm LONG ANCHOR FASTENER, WITH SUITABLE NUT & WASHERS	G.I.	2 NOS.	ELECTRICAL CONTRACTOR	ELECTRICAL CONTRACTOR
4	10 DIA 50 LONG HEXAGONAL HEAD BOLTS WITH NUTS,SPRING & PLAIN WASHERS, SUITABLE FOR CONNECTIONS SHOWN IN THIS DRAWING (REFER DETAIL–1)	G.I.	8 SETS	ELECTRICAL CONTRACTOR	ELECTRICAL CONTRACTOR
5	6 DIA 40 LONG HEXAGONAL HEAD BOLTS WITH NUTS,SPRING & PLAIN WASHERS, SUITABLE FOR CONNECTIONS SHOWN IN THIS DRAWING (REFER DETAIL–1)	G.I.	4 SETS	ELECTRICAL CONTRACTOR	ELECTRICAL CONTRACTOR
6	1.1 KV INSULATOR, MINIMUM HEIGHT 50 mm WITH 2 SETS OF BOLTS TO SUIT INSULATOR	–	2 NOS	ELECTRICAL CONTRACTOR	ELECTRICAL CONTRACTOR

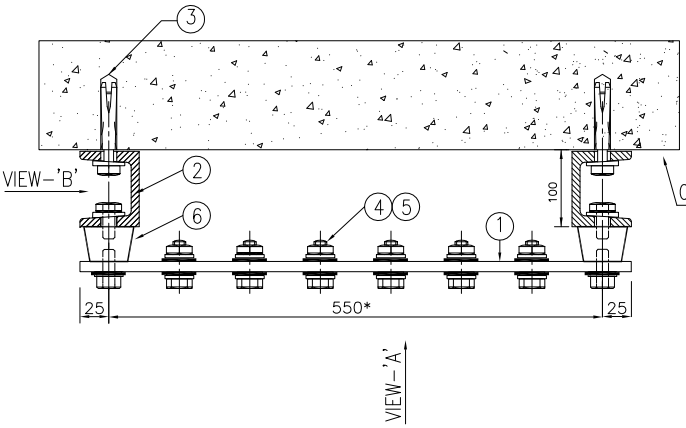

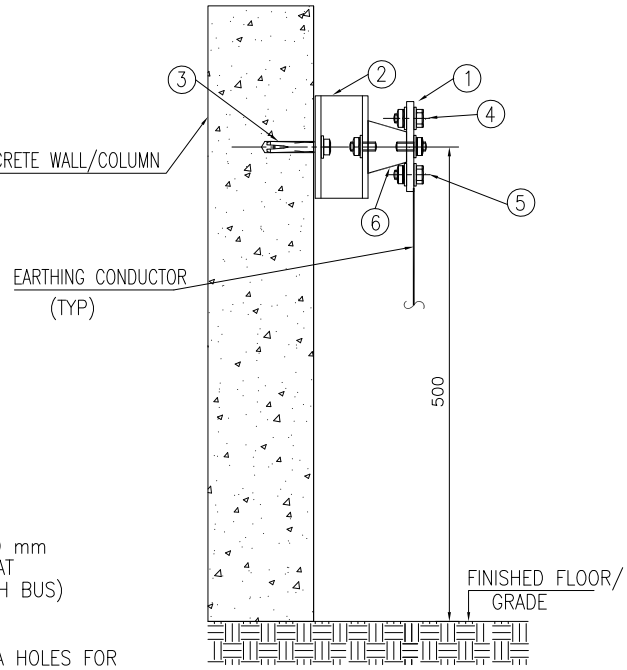

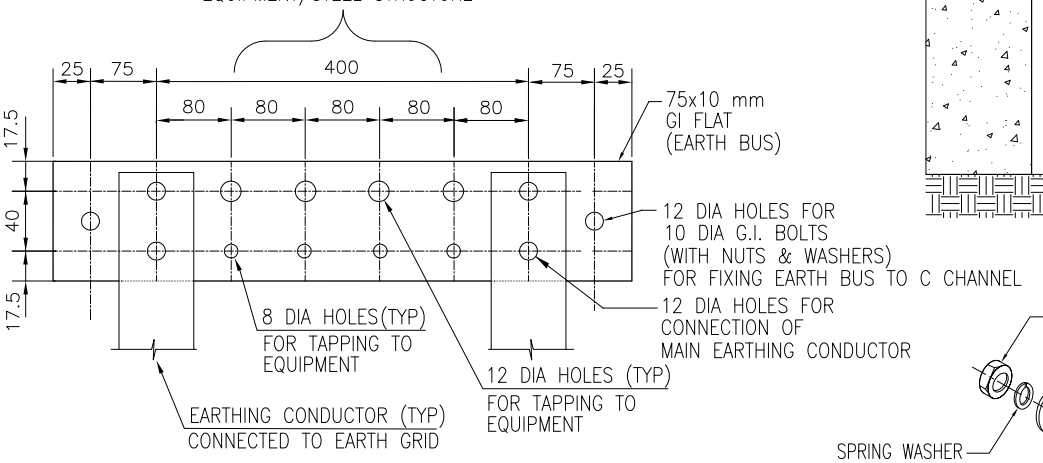

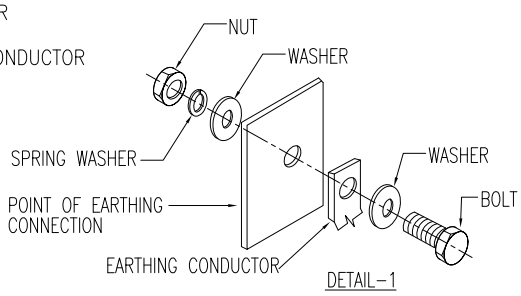

NOTES:
1) ALL DIMENSIONS ARE IN 'mm' UNLESS OTHERWISE SPECIFIED.
2) SIZE OF EARTHING CONDUCTOR SHALL BE AS PER THE 'EARTHING SCHEDULE' FOR THE PROJECT.
3) * DISTANCE BETWEEN "C" CHANNEL CAN BE MODIFIED TO SUIT COLUMN WIDTH.
4) SUPPLY & INSTALLATION OF STEEL IS NOT PART OF THIS INSTALLATION ARRANGEMENT. SAME IS COVERED ELSEWHERE.

DRAWING NOT TO SCALE

Code	Contract No.	Document ID	Part	Rev.
		PIN–LEP–ELT–4002		00

Rev.	Date	Name (Drawn/Prepared)		Date	Name (Checked)		Date	Name (Approved)	Description	Acc. Code	Cat. Code	Acc. Code	Status
00	29/10/15	RDK	ANK	29/10/15	RPM		29/10/15	RPM	ISSUED AS STANDARD				

BAR–Code

Store Location: Server/Share

Store Location: Folder

Store Name
EEB4

Pro. Unit	TON	Group	Type of Document	Sheet
				1 / 1

Con. Unit	Scale	Order No.
	NTS	

thyssenkrupp

	Date	Name
Drawn	29/10/15	RDK
Prepared	29/10/15	ANK
Checked	29/10/15	RPM
Approved	29/10/15	RPM

Description
INSTALLATION STANDARDS – EARTHING INSULATED EQUIPOTENTIAL BONDING STRIP ON CONCRETE WALL/COLUMN (EEB4)

ISO A4

© thyssenkrupp Industrial Solutions (India) Private Limited 2017. All rights reserved

ITEM	DESCRIPTION	MATERIAL	QTY.	SUPPLY BY	INSTALLATION BY
1	EQUIPOTENTIAL BONDING STRIP(EARTH BUS)–600(L)x75(W)x10(T)	HDGI/ Tinned Cu	1 NO.	ELECTRICAL CONTRACTOR	ELECTRICAL CONTRACTOR
2	ISMC 100 WITH 12 DIA HOLES ON FLANGE SIDE, PAINTED AS PER PROJECT STANDARD	MS PAINTED	2 NOS. 80 mm	REFER NOTE–5	
3	10 DIA 50 LONG HEXAGONAL HEAD BOLTS WITH NUTS,SPRING & PLAIN WASHERS, SUITABLE FOR CONNECTIONS SHOWN IN THIS DRAWING (REFER DETAIL–1)	G.I.	8 SETS	ELECTRICAL CONTRACTOR	ELECTRICAL CONTRACTOR
4	6 DIA 40 LONG HEXAGONAL HEAD BOLTS WITH NUTS,SPRING & PLAIN WASHERS, SUITABLE FOR CONNECTIONS SHOWN IN THIS DRAWING (REFER DETAIL–1)	G.I.	4 SETS	ELECTRICAL CONTRACTOR	ELECTRICAL CONTRACTOR
5	1.1 KV INSULATOR, MINIMUM HEIGHT 50 mm WITH 2 SETS OF BOLTS TO SUIT INSULATOR	G.I.	2 NOS	ELECTRICAL CONTRACTOR	ELECTRICAL CONTRACTOR

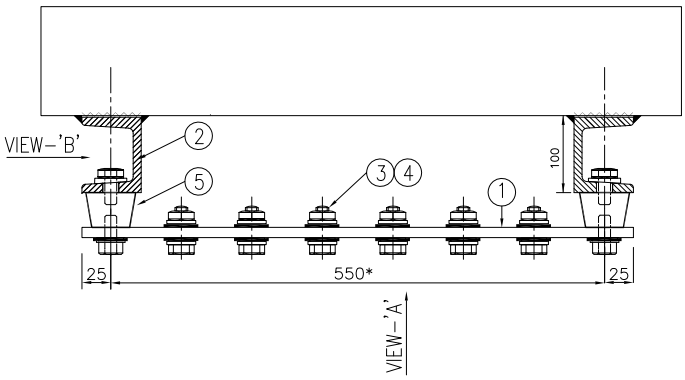

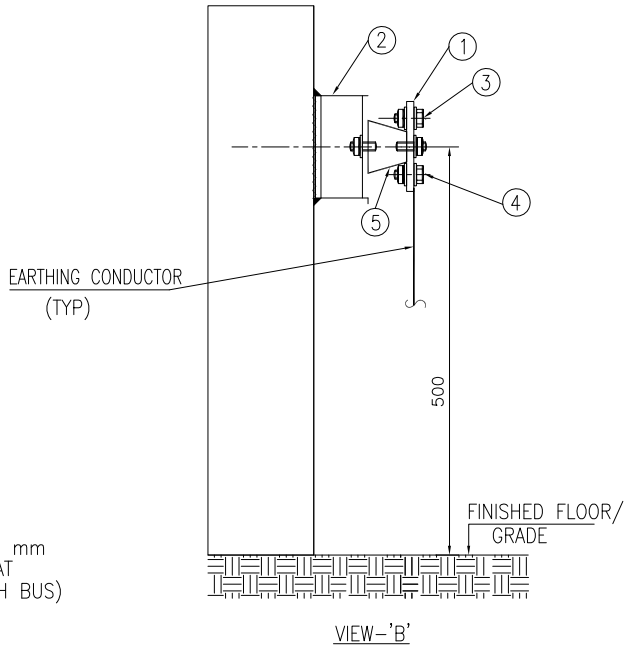

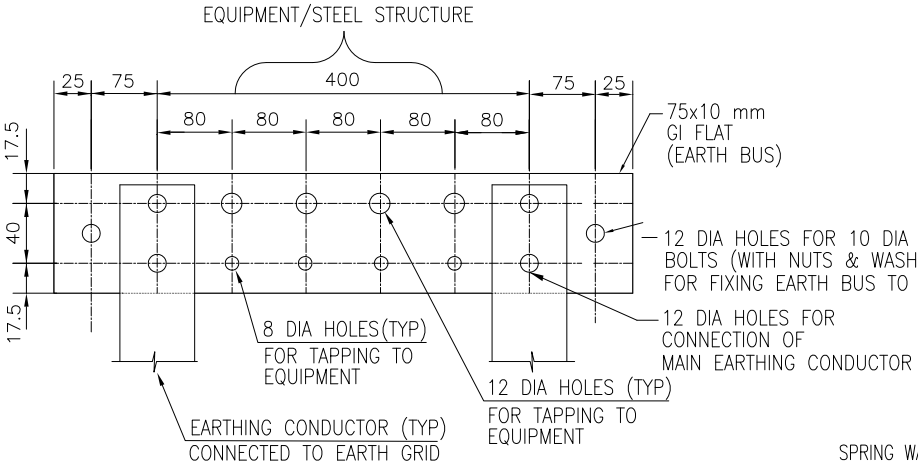

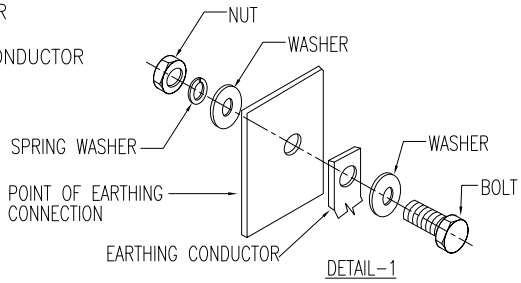

NOTES:
1) ALL DIMENSIONS ARE IN 'mm' UNLESS OTHERWISE SPECIFIED.
2) SIZE OF EARTHING CONDUCTOR SHALL BE AS PER THE 'EARTHING SCHEDULE' FOR THE PROJECT.
3) * DISTANCE BETWEEN "C" CHANNEL CAN BE MODIFIED TO SUIT COLUMN WIDTH.
4) ** INCASE OF FIREPROOFING REQUIREMENT EXTRA "C" CHANNEL ALONGWITH FIXING NUTBOLTS SHALL BE CONSIDERED.
5) SUPPLY & INSTALLATION OF STEEL IS NOT PART OF THIS INSTALLATION ARRANGEMENT. SAME IS COVERED ELSEWHERE.

DRAWING NOT TO SCALE

Code	Contract No.	Document ID	Part	Rev.
		PIN–LEP–ELT–4002		00

Rev.	Date	Name (Drawn/Prepared)		Date	Name (Checked)		Date	Name (Approved)	Description	Acc. Code	Cat. Code	Acc. Code	Status
00	29/10/15	RDK	ANK	29/10/15	RPM		29/10/15	RPM	ISSUED AS STANDARD				

BAR–Code

Store Location: Server/Share

Store Location: Folder

Store Name
EEB5

Pro. Unit	TON	Group	Type of Document	Sheet
				1 / 1

Con. Unit	Scale	Order No.
	NTS	

thyssenkrupp

	Date	Name
Drawn	29/10/15	RDK
Prepared	29/10/15	ANK
Checked	29/10/15	RPM
Approved	29/10/15	RPM

Description
INSTALLATION STANDARDS – EARTHING INSULATED EQUIPOTENTIAL BONDING STRIP ON STEEL STRUCTURE/COLUMN (EEB5)

ISO A4

UH_BO_ISO_A4_P_E_tktSIndia.dwg / AG03_UH_BO_ISO_A4_P.dwg / 14.12.2016

© thyssenkrupp Industrial Solutions (India) Private Limited 2017. All rights reserved

UH_BO_ISO_A4_P_E_tktSIndia.dwg / AG03_UH_BO_ISO_A4_P.dwg / 14.12.2016

ITEM	DESCRIPTION	MATERIAL	QTY.	SUPPLY BY	INSTALLATION BY
1	EARTHING CONDUCTOR AS PER EARTHING SCHEDULE	–	AS REQUIRED	ELECTRICAL CONTRACTOR	ELECTRICAL CONTRACTOR
2	MUSHROOM HEAD BOLT M10 X 50mm LONG, THREADS UPTO HEAD, WITH NUTS & WASHERS SUITABLE FOR CONNECTIONS SHOWN IN THIS DRAWING	H.D.G.I.	AS REQUIRED	ELECTRICAL CONTRACTOR	ELECTRICAL CONTRACTOR

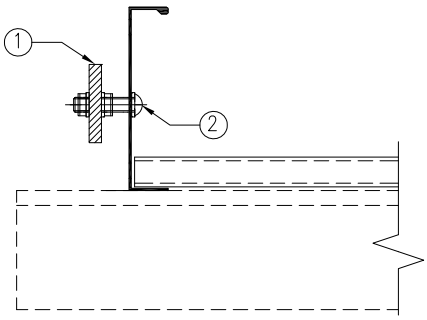

SECTION A–A

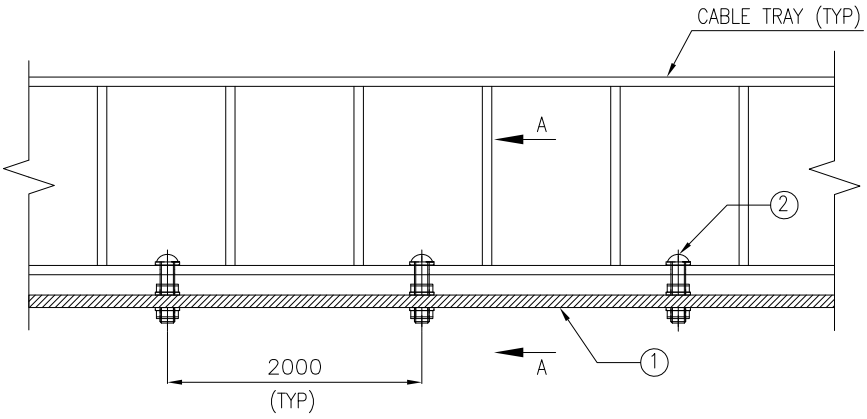

PLAN VIEW

DRAWING NOT TO SCALE

NOTES

1) ALL DIMENSIONS ARE IN 'mm' UNLESS OTHERWISE SPECIFIED.

Code	Contract No.	Document ID	Part	Rev.
		PIN–LEP–ELT–4002		00

Rev.	Date	Name (Drawn/Prepared)		Date	Name (Checked)		Date	Name (Approved)		Description	Acc. Code	Cat. Code	Acc. Code	Status
00	03/08/17	KRP	MLD	03/08/17	RPM		03/08/17	RPM		ISSUED AS STANDARD				

BAR–Code

Store Location: Server/Share

Store Location: Folder

Store Name
EET1

Pro. Unit	TON	Group	Type of Document	Sheet
				1 / 1

Con. Unit	Scale	Order No.
	NTS	

thyssenkrupp

	Date	Name
Drawn	03/08/17	KRP
Prepared	03/08/17	MLD
Checked	03/08/17	RPM
Approved	03/08/17	RPM

Description
INSTALLATION STANDARDS – EARTHING
EARTHING CONDUCTOR INSTALLED
ON CABLE TRAY
(EET1)

ISO A4

© thyssenkrupp Industrial Solutions (India) Private Limited 2017. All rights reserved

ITEM	DESCRIPTION	MATERIAL	QTY.	SUPPLY BY	INSTALLATION BY
1	ISMC 100 WITH 12 DIA HOLES ON FLANGE SIDE, PAINTED AS PER PROJECT STANDARD	MS PAINTED	1 NO. 80 mm	REFER NOTE-3	
2	EARTHING CONDUCTOR. SIZE OF EARTHING CONDUTOR & MATERIAL SHALL BE AS PER THE 'EARTHING SCHEDULE' FOR THE PROJECT.		0.5 MTRS	ELECTRICAL CONTRACTOR	ELECTRICAL CONTRACTOR
3	EARTHING STUB-UP - STRIP, WITH 1 NO. 12 DIA HOLE SIZE SHALL BE AS PER THE 'EARTHING SCHEDULE' FOR THE PROJECT.	HDGI	1 NO.	PIPING CONTRACTOR	PIPING CONTRACTOR
4	HEXAGONAL HEAD BOLTS-40mm LONG, WITH NUTS & WASHERS SUITABLE FOR CONNECTIONS SHOWN IN THIS DRAWING (REFER DETAIL-1)	GI	2 SETS	ELECTRICAL CONTRACTOR	ELECTRICAL CONTRACTOR
5	CABLE LUG SUITABLE FOR THE CABLE		2 NOS.	ELECTRICAL CONTRACTOR	ELECTRICAL CONTRACTOR
6	CLAMPING ARRANGEMENT SUITABLE FOR EARTHING CONDUCTOR WITH REQUIRED HARDWARE		1 LOT.	ELECTRICAL CONTRACTOR	ELECTRICAL CONTRACTOR

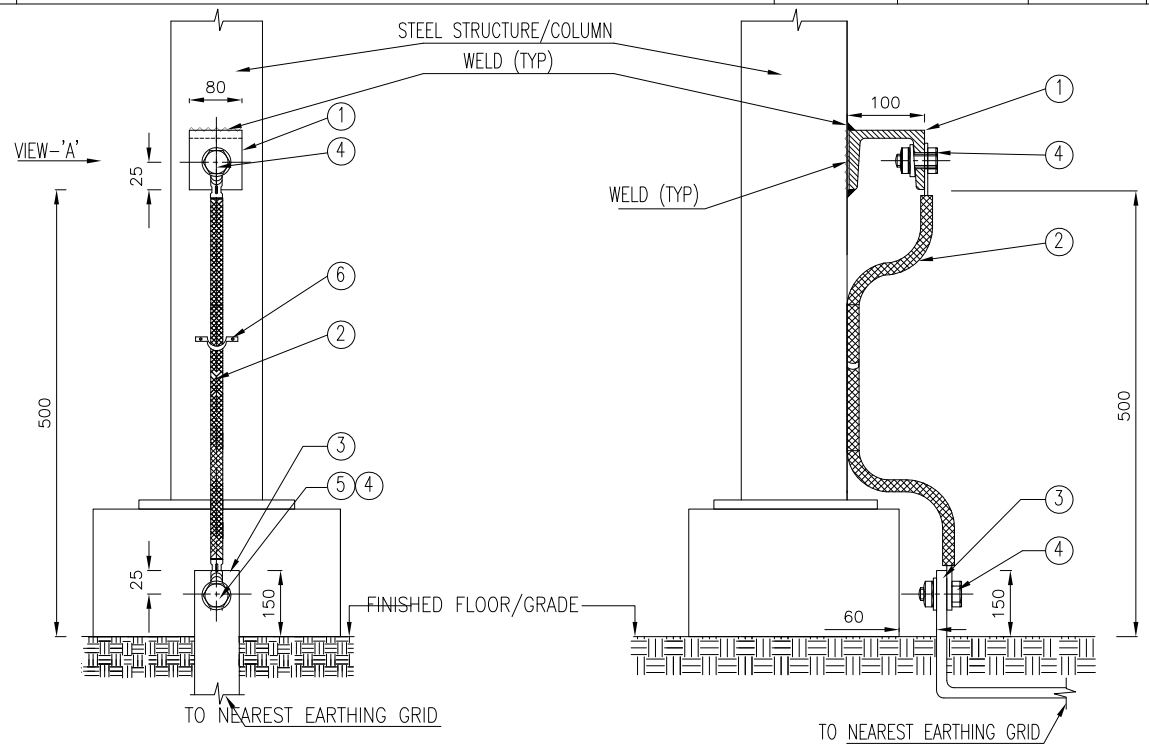

VIEW-'A'

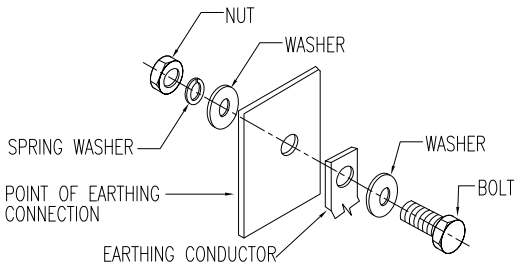

DETAIL-1

NOTES:
1) ALL DIMENSIONS ARE IN 'mm' UNLESS OTHERWISE SPECIFIED.
2) STEEL STRUCTURES viz. PIPERACK & BUILDING COLUMNS SHALL BE EARTHED AT AN INTERVAL AS PER THE 'EARTHING SCHEDULE' FOR THE PROJECT.
3) SUPPLY & INSTALLATION OF STEEL IS NOT PART OF THIS INSTALLATION ARRANGEMENT. SAME IS COVERED ELSEWHERE.

DRAWING NOT TO SCALE

Code	Contract No.	Document ID	Part	Rev.
		PIN-LEP-ELT-4002		00

Rev.	Date	Name (Drawn/Prepared)		Date	Name (Checked)		Date	Name (Approved)	Description	Acc. Code	Cat. Code	Acc. Code	Status
00	29/10/15	RDK	ANK	29/10/15	RPM		29/10/15	RPM	ISSUED AS STANDARD				

BAR-Code

Store Location: Server/Share

Store Location: Folder

Store Name
ESS1

Pro. Unit	TON	Group	Type of Document	Sheet
				1 / 1

Con. Unit	Scale	Order No.
	NTS	

thyssenkrupp

	Date	Name
Drawn	29/10/15	RDK
Prepared	29/10/15	ANK
Checked	29/10/15	RPM
Approved	29/10/15	RPM

Description
INSTALLATION STANDARDS - EARTHING
EARTHING OF STEEL STRUCTURE
(ESS1)

ISO A4

UH_BO_ISO_A4_P_E_tktSIndia.dwg / AG03_UH_BO_ISO_A4_P.dwg / 14.12.2016

© thyssenkrupp Industrial Solutions (India) Private Limited 2017. All rights reserved

ITEM	DESCRIPTION	MATERIAL	QTY.	SUPPLY BY	INSTALLATION BY
1	EARTHING CLEAT–['l'+50](L)x50(W)x10(T), WITH 1NO. 10 DIA HOLE, 'l'=INSULATION THICKNESS	SAME AS PIPELINE	2 NOS.	CLIENT/PIPING CONTRACTOR	PIPING CONTRACTOR
2	EARTHING CONDUCTOR. SIZE OF EARTHING CONDUTOR & MATERIAL SHALL BE AS PER THE 'EARTHING SCHEDULE' FOR THE PROJECT.	–	0.4 MTRS	ELECTRICAL CONTRACTOR	ELECTRICAL CONTRACTOR
3	HEXAGONAL HEAD BOLTS–25mm LONG, WITH NUTS & WASHERS SUITABLE FOR CONNECTIONS SHOWN IN THIS DRAWING (REFER DETAIL–2)	GI	2 SETS	ELECTRICAL CONTRACTOR	ELECTRICAL CONTRACTOR
4	CABLE LUG SUITABLE FOR THE CABLE	–	2 NOS.	ELECTRICAL CONTRACTOR	ELECTRICAL CONTRACTOR

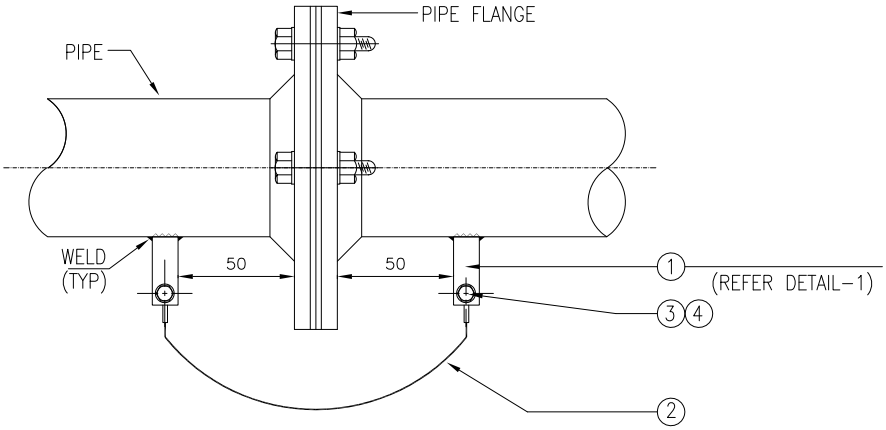

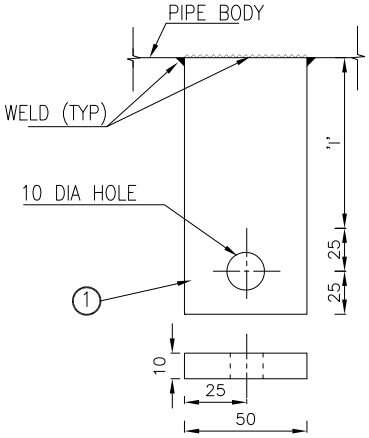

DETAIL–1

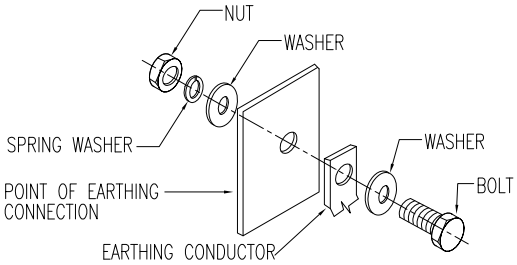

DETAIL–2

DRAWING NOT TO SCALE

NOTE:

1) ALL DIMENSIONS ARE IN 'mm' UNLESS OTHERWISE SPECIFIED.

Code	Contract No.	Document ID	Part	Rev.
		PIN–LEP–ELT–4002		00

Rev.	Date	Name (Drawn/Prepared)		Date	Name (Checked)		Date	Name (Approved)	Description	Acc. Code	Cat. Code	Acc. Code	Status
00	29/10/15	RDK	ANK	29/10/15	RPM		29/10/15	RPM	ISSUED AS STANDARD				

BAR–Code

Store Location: Server/Share

Store Location: Folder

Store Name
EBP1

Pro. Unit	TON	Group	Type of Document	Sheet
				1 / 1

Con. Unit	Scale	Order No.
	NTS	

thyssenkrupp

	Date	Name
Drawn	29/10/15	RDK
Prepared	29/10/15	ANK
Checked	29/10/15	RPM
Approved	29/10/15	RPM

Description
INSTALLATION STANDARDS – EARTHING BONDING OF PIPELINES (EBP1)

ISO A4

UH_BO_ISO_A4_P_E_tktSIndia.dwg / AG03_UH_BO_ISO_A4_P.dwg / 14.12.2016

© thyssenkrupp Industrial Solutions (India) Private Limited 2017. All rights reserved

ITEM	DESCRIPTION	MATERIAL	QTY.	SUPPLY BY	INSTALLATION BY
1	25X3mm GI STRAPPING CLAMP SUITABLE FOR RESPECTIVE PIPE SIZE (REFER NOTE-4)	GI	AS REQUIRED	PIPING CONTRACTOR	PIPING CONTRACTOR
2	EARTHING CONDUCTOR-16mm^2, PVC INSULATED, GREEN/YELLOW CABLE	ALUMINIUM	AS REQUIRED	ELECTRICAL CONTRACTOR	ELECTRICAL CONTRACTOR
3	8 DIA HEXAGONAL HEAD BOLTS-50mm LONG, WITH NUTS & WASHERS SUITABLE FOR CONNECTIONS SHOWN IN THIS DRAWING (REFER VIEW-A & DETAIL-2)	GI	AS REQUIRED	ELECTRICAL CONTRACTOR	ELECTRICAL CONTRACTOR
4	CABLE LUG SUITABLE FOR THE CABLE	AL	AS REQUIRED	ELECTRICAL CONTRACTOR	ELECTRICAL CONTRACTOR
5	EARTHING CLEAT, WITH 1NO. 10 DIA HOLE (DETAIL3)	–	AS REQUIRED	ELECTRICAL CONTRACTOR	ELECTRICAL CONTRACTOR

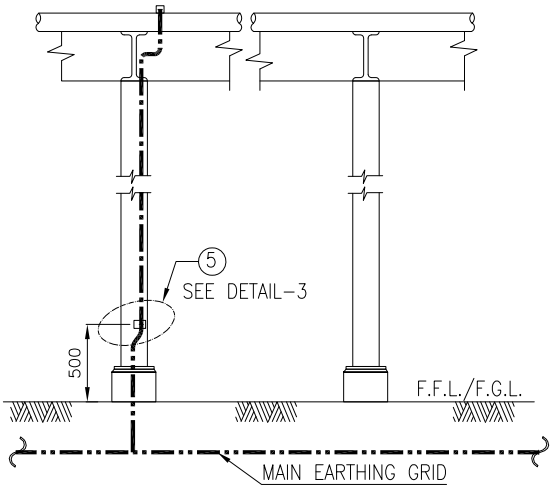

SIDE VIEW

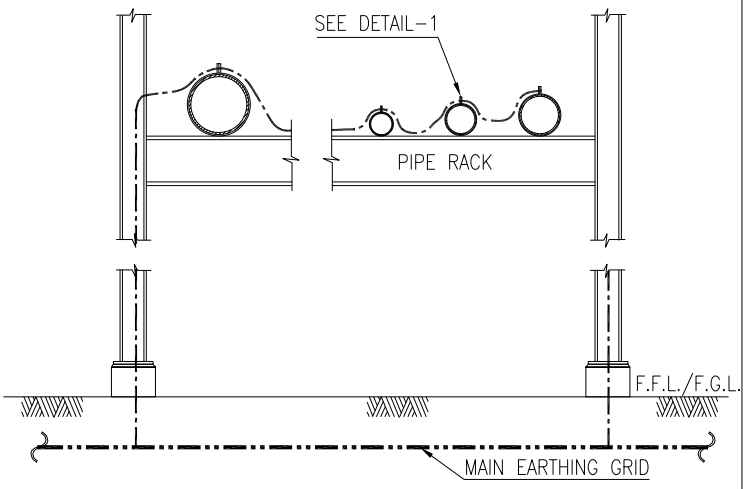

FRONT VIEW

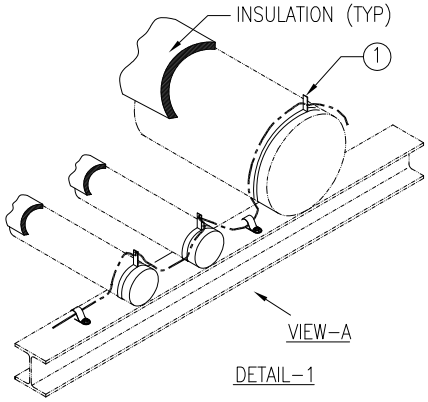

DETAIL-1

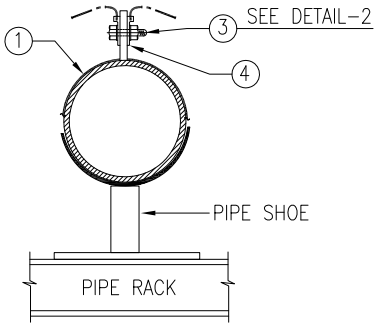

VIEW-A

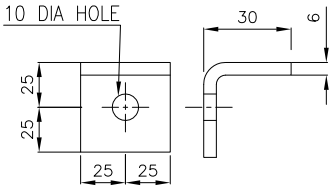

DETAIL-3

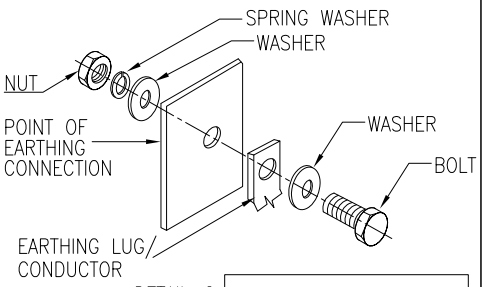

DETAIL-2

DRAWING NOT TO SCALE

NOTES:

1) ALL DIMENSIONS ARE IN 'mm' UNLESS OTHERWISE SPECIFIED.
2) THE PIPE LINES SHALL BE BONDED AND EARTHED ONLY AT THE ENTRY EXIT POINTS OF BATTERY LIMIT OF PROCESS UNIT AS PER PROJECT SPECIFIC REQUIREMENT
3) STEEL PIPE RACKS SHALL BE EARTHED AT AN INTERVAL AS PER THE EARTHING SCHDEULE OF PROJECT.
4) GI STRAPS SHALL BE SELECTED APPROPRIATELY CONSIDERING INSULATION THICKNESS. CONNECTION POINT FOR EARTHING CABLE SHALL BE ACCESSIBLE AFTER INSULATION WRAPPING

Code	Contract No.	Document ID	Part	Rev.
		PIN-LEP-ELT-4002		00

Rev.	Date	Name (Drawn/Prepared)	Date	Name (Checked)	Date	Name (Approved)	Description	Acc. Code	Cat. Code	Acc. Code	Status
00	29/10/15	RDK	29/10/15	ANK	29/10/15	RPM	29/10/15	RPM	ISSUED AS STANDARD		

BAR-Code

Store Location: Server/Share

Store Location: Folder

Store Name: EBP2

Pro. Unit	TON	Group	Type of Document	Sheet
				1 / 1

Con. Unit	Scale	Order No.
	NTS	

thyssenkrupp

	Date	Name
Drawn	29/10/15	RDK
Prepared	29/10/15	ANK
Checked	29/10/15	RPM
Approved	29/10/15	RPM

Description

INSTALLATION STANDARDS – EARTHING
EARTHING / BONDING OF PIPELINES AND PIPE RACKS AT TIE IN POINT (EBP2)

ISO A4

UH_BO_ISO_A4_P_E_tktSIndia.dwg / AG03_UH_BO_ISO_A4_P.dwg / 14.12.2016

© thyssenkrupp Industrial Solutions (India) Private Limited 2017. All rights reserved

ITEM	DESCRIPTION	MATERIAL	QTY.	SUPPLY BY	INSTALLATION BY
1	EARTHING CLEAT-['I'+50](L)x50(W)x10(T), WITH 1NO. 12 DIA HOLE, 'I'=INSULATION THICKNESS	SAME AS EQUIPMENT	'X' NOS. ('X'=AS PER TABLE-1)	ELECTRICAL CONTRACTOR	ELECTRICAL CONTRACTOR
2	EARTHING CONDUCTOR. SIZE OF EARTHING CONDUTOR & MATERIAL SHALL BE AS PER THE 'EARTHING SCHEDULE' FOR THE PROJECT.	ALUMINIUM	AS REQUIRED	ELECTRICAL CONTRACTOR	ELECTRICAL CONTRACTOR
3	EARTHING STUB-UP - STRIP, WITH 1 NO. 12 DIA HOLE SIZE SHALL BE AS PER THE 'EARTHING SCHEDULE' FOR THE PROJECT.	HDGI	'X' NOS.	ELECTRICAL CONTRACTOR	ELECTRICAL CONTRACTOR
4	10 DIA HEXAGONAL HEAD BOLTS-50mm LONG, WITH NUTS & WASHERS SUITABLE FOR CONNECTIONS SHOWN IN THIS DRAWING (REFER DETAIL-2)	GI	2 x 'X' SETS	ELECTRICAL CONTRACTOR	ELECTRICAL CONTRACTOR
5	CABLE LUG SUITABLE FOR THE CABLE	AL	2 x 'X' SETS	ELECTRICAL CONTRACTOR	ELECTRICAL CONTRACTOR

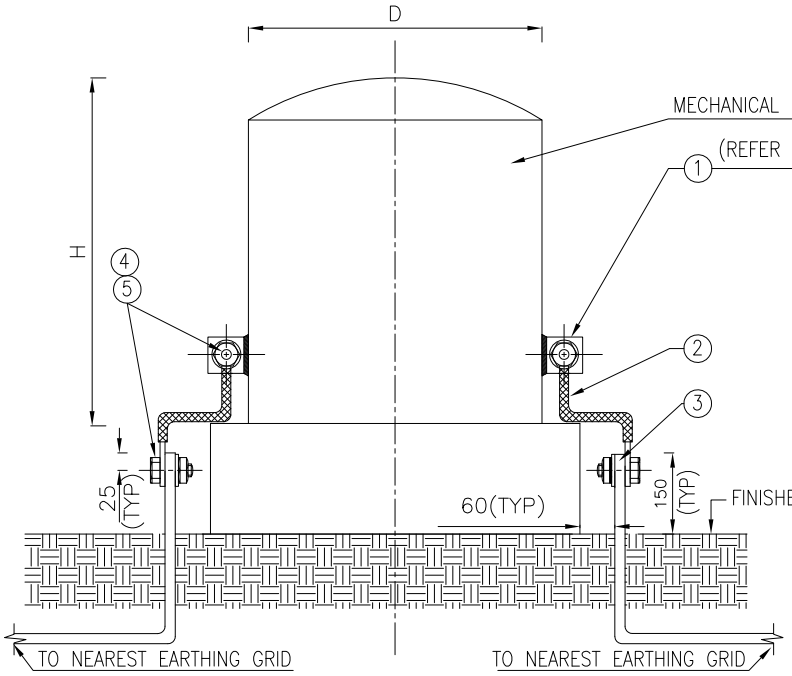

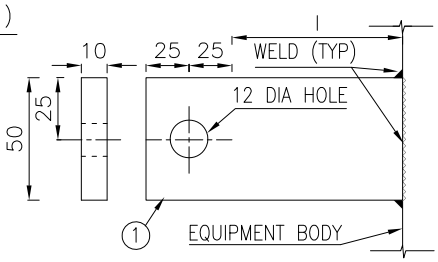

DETAIL-1

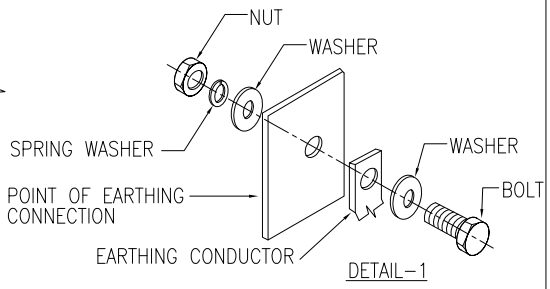

DETAIL-1

TABLE-1:-

EQUIPMENT DIMENSION ('D' OR 'H')	NUMBER OF EARTHING CLEATS
< 20 MTRS	2 NOS. AT 180deg
>=20<30 MTRS	3 NOS. AT 120deg
>=30 MTRS	4 NOS. AT 90deg

DRAWING NOT TO SCALE

NOTES:

1) ALL DIMENSIONS ARE IN 'mm' UNLESS OTHERWISE SPECIFIED.
2) QUANTITY AND ORIENTATION OF EARTHING CLEATS ON MECHANICAL EQUIPMENT/INTEGRAL EQUIPMENT SUPPORTS SHALL BE MARKED BY ELECTRICAL GROUP ON THE EQUIPMENT FABRICATION/NOZZLE ORIENTATION DRAWINGS. CO-ORDINATION TO BE DONE WITH MECHNICAL/PIPING GROUP FOR THE SAME.

Code	Contract No.	Document ID	Part	Rev.
		PIN-LEP-ELT-4002		00

Rev.	Date	Name (Drawn/Prepared)	Date	Name (Checked)	Date	Name (Approved)	Description	Acc. Code	Cat. Code	Acc. Code	Status
00	29/10/15	RDK ANK	29/10/15	RPM	29/10/15	RPM	ISSUED AS STANDARD				

BAR-Code

Store Location: Server/Share

Store Location: Folder

Store Name: EME1

Pro. Unit	TON	Group	Type of Document	Sheet
				1 / 2

Con. Unit	Scale	Order No.
	NTS	

thyssenkrupp

	Date	Name
Drawn	29/10/15	RDK
Prepared	29/10/15	ANK
Checked	29/10/15	RPM
Approved	29/10/15	RPM

Description: INSTALLATION STANDARDS - EARTHING EARTHING OF MECHANICAL EQUIPMENT (TANK, VESSEL) (EME1)

ISO A4

UH_BO_ISO_A4_P_E_tktSIndia.dwg / AG03_UH_BO_ISO_A4_P.dwg / 14.12.2016

© thyssenkrupp Industrial Solutions (India) Private Limited 2017. All rights reserved

ITEM	DESCRIPTION	MATERIAL	QTY.	SUPPLY BY	INSTALLATION BY
1	EARTHING CLEAT-100(L)x50(W)x10(T), WITH 1 NO. 12 DIA HOLE	SAME AS EQUIPMENT SUPPORT	'X' NOS. ('X'=AS PER TABLE-1)	ELECTRICAL CONTRACTOR	ELECTRICAL CONTRACTOR
2	EARTHING CONDUCTOR. SIZE OF EARTHING CONDUTOR & MATERIAL SHALL BE AS PER THE 'EARTHING SCHEDULE' FOR THE PROJECT.	ALUMINIUM	AS REQUIRED	ELECTRICAL CONTRACTOR	ELECTRICAL CONTRACTOR
3	EARTHING STUB-UP - STRIP, WITH 1 NO. 12 DIA HOLE SIZE SHALL BE AS PER THE 'EARTHING SCHEDULE' FOR THE PROJECT.	HDGI	'X' NOS.	ELECTRICAL CONTRACTOR	ELECTRICAL CONTRACTOR
4	10 DIA HEXAGONAL HEAD BOLTS-50mm LONG, WITH NUTS & WASHERS SUITABLE FOR CONNECTIONS SHOWN IN THIS DRAWING (REFER DETAIL-2)	GI	2 x 'X' SETS	ELECTRICAL CONTRACTOR	ELECTRICAL CONTRACTOR
5	CABLE LUG SUITABLE FOR THE CABLE	AL	2 x 'X' SETS	ELECTRICAL CONTRACTOR	ELECTRICAL CONTRACTOR

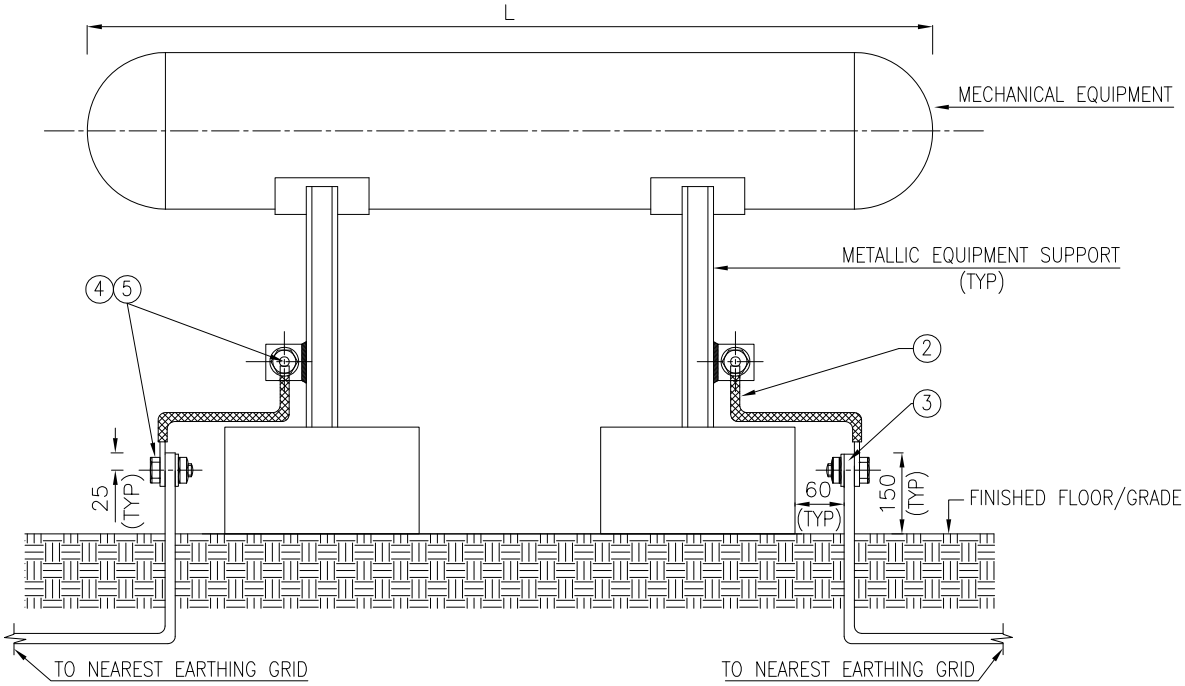

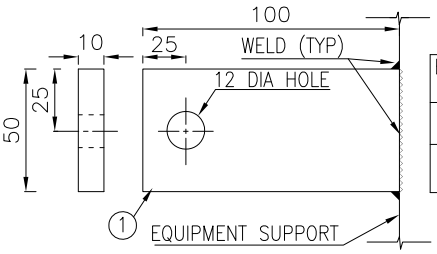

DETAIL-1

EQUIPMENT DIMENSION ('L')	NUMBER OF EARTHING CLEATS (X)
< 20 MTRS	2 NOS. *
>=20 MTRS	4 NOS. *

* SHALL BE DIAMETRICALLY OPPOSITE

TABLE-1:-

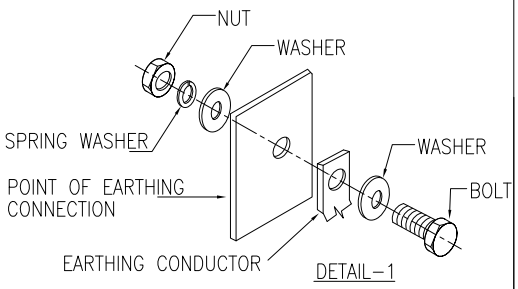

DETAIL-1

DRAWING NOT TO SCALE

NOTES:

1) ALL DIMENSIONS ARE IN 'mm' UNLESS OTHERWISE SPECIFIED.
2) QUANTITY AND ORIENTATION OF EARTHING CLEATS ON MECHANICAL EQUIPMENT/INTEGRAL EQUIPMENT SUPPORTS SHALL BE MARKED BY ELECTRICAL GROUP ON THE EQUIPMENT FABRICATION/NOZZLE ORIENTATION DRAWINGS. CO-ORDINATION TO BE DONE WITH MECHNICAL/PIPING GROUP FOR THE SAME.

Code	Contract No.	Document ID	Part	Rev.
		PIN-LEP-ELT-4002		00

Rev.	Date	Name (Drawn/Prepared)	Date	Name (Checked)	Date	Name (Approved)	Description	Acc. Code	Cat. Code	Acc. Code	Status
00	29/10/15	RDK	29/10/15	ANK	29/10/15	RPM	29/10/15	RPM	ISSUED AS STANDARD				

BAR-Code

Store Location: Server/Share

Store Location: Folder

Store Name: EME1

Pro. Unit	TON	Group	Type of Document	Sheet
				2 / 2

Con. Unit	Scale	Order No.
	NTS	

thyssenkrupp

	Date	Name
Drawn	29/10/15	RDK
Prepared	29/10/15	ANK
Checked	29/10/15	RPM
Approved	29/10/15	RPM

Description: INSTALLATION STANDARDS - EARTHING EARTHING OF MECHANICAL EQUIPMENT (TANK,VESSEL) (EME1)

ISO A4

UH_BO_ISO_A4_P_E_tktSIndia.dwg / AG03_UH_BO_ISO_A4_P.dwg / 14.12.2016

© thyssenkrupp Industrial Solutions (India) Private Limited 2017. All rights reserved

ITEM	DESCRIPTION	MATERIAL	QTY.	SUPPLY BY	INSTALLATION BY
1	EQUIPOTENTIAL BONDING STRIP	–	AS REQUIRED	ELECTRICAL CONTRACTOR	ELECTRICAL CONTRACTOR
2	EARTH PIT	–	–	ELECTRICAL CONTRACTOR	ELECTRICAL CONTRACTOR
3	10 DIA 50 LONG HEXAGONAL HEAD BOLTS WITH NUTS,SPRING & PLAIN WASHERS, SUITABLE FOR CONNECTIONS SHOWN IN THIS DRAWING (REFER DETAIL–1)	GI	'X' NOS ('X'=AS REQUIRED)	ELECTRICAL CONTRACTOR	ELECTRICAL CONTRACTOR

DRAWING NOT TO SCALE

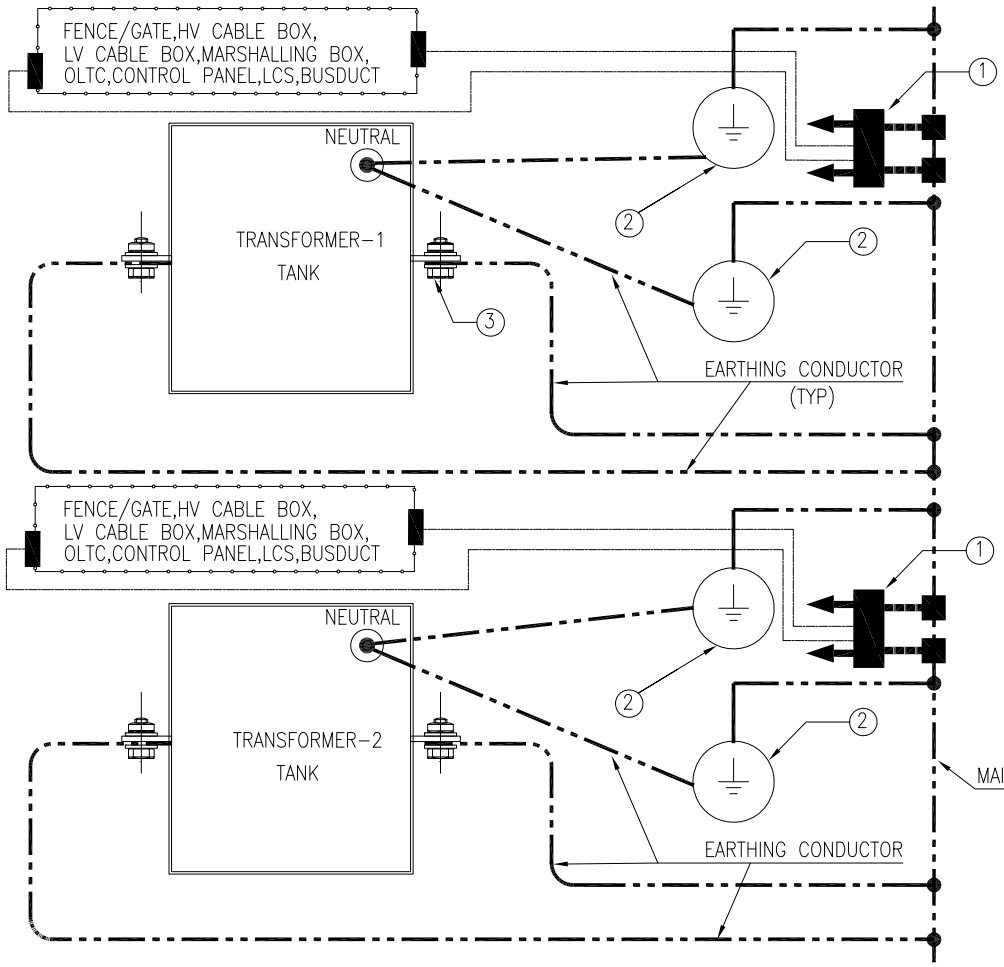

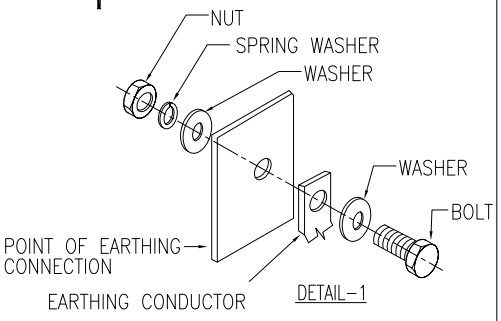

NOTES

1) ALL DIMENSIONS ARE IN 'mm' UNLESS OTHERWISE SPECIFIED.
2) THE EARTHING CONDUCTOR ROUTED FROM THE NEUTRAL TERMINAL/BUSHING OF THE TRANSFORMER. TO THE NEUTRAL EARTH PIT SHALL BE INSULATED FROM THE BODY OF THE TRANSFORMER
3) SIZE OF EARTHING CONDUCTORS SHALL BE AS PER THE 'EARTHING SCHEDULE' FOR THE PROJECT.
4) FOR POWER TRANSFORMER RAIL EARTHING SHALL BE AS PER THE 'EARTHING SCHEDULE' FOR THE PROJECT.

Code	Contract No.	Document ID	Part	Rev.
		PIN–LEP–ELT–4002		00

Rev.	Date	Name (Drawn/Prepared)		Date	Name (Checked)		Date	Name (Approved)	Description	Acc. Code	Cat. Code	Acc. Code	Status
00	29/10/15	RDK	ANK	29/10/15	RPM		29/10/15	RPM	ISSUED AS STANDARD				

BAR–Code

Store Location: Server/Share

Store Location: Folder

Store Name FBDS1

Pro. Unit	TON	Group	Type of Document	Sheet
				1 / 1

Con. Unit	Scale	Order No.
	NTS	

thyssenkrupp

	Date	Name
Drawn	29/10/15	RDK
Prepared	29/10/15	ANK
Checked	29/10/15	RPM
Approved	29/10/15	RPM

Description
INSTALLATION STANDARDS – EARTHING
EARTHING OF TRANSFORMER WITH SOLIDLY GROUNDED NEUTRAL (ETS1)

ISO A4

UH_BO_ISO_A4_P_E_tktSIndia.dwg / AG03_UH_BO_ISO_A4_P.dwg / 14.12.2016

© thyssenkrupp Industrial Solutions (India) Private Limited 2017. All rights reserved

ITEM	DESCRIPTION	MATERIAL	QTY.	SUPPLY BY	INSTALLATION BY
1	EQUIPOTENTIAL BONDING STRIP	–	AS REQUIRED	ELECTRICAL CONTRACTOR	ELECTRICAL CONTRACTOR
2	EARTH PIT	–	–	ELECTRICAL CONTRACTOR	ELECTRICAL CONTRACTOR
3	10 DIA 50 LONG HEXAGONAL HEAD BOLTS, WITH NUTS & WASHERS SUITABLE FOR CONNECTIONS SHOWN IN THIS DRAWING (REFER DETAIL-1)	GI	'X' NOS ('X'=AS REQUIRED)	ELECTRICAL CONTRACTOR	ELECTRICAL CONTRACTOR

DRAWING NOT TO SCALE

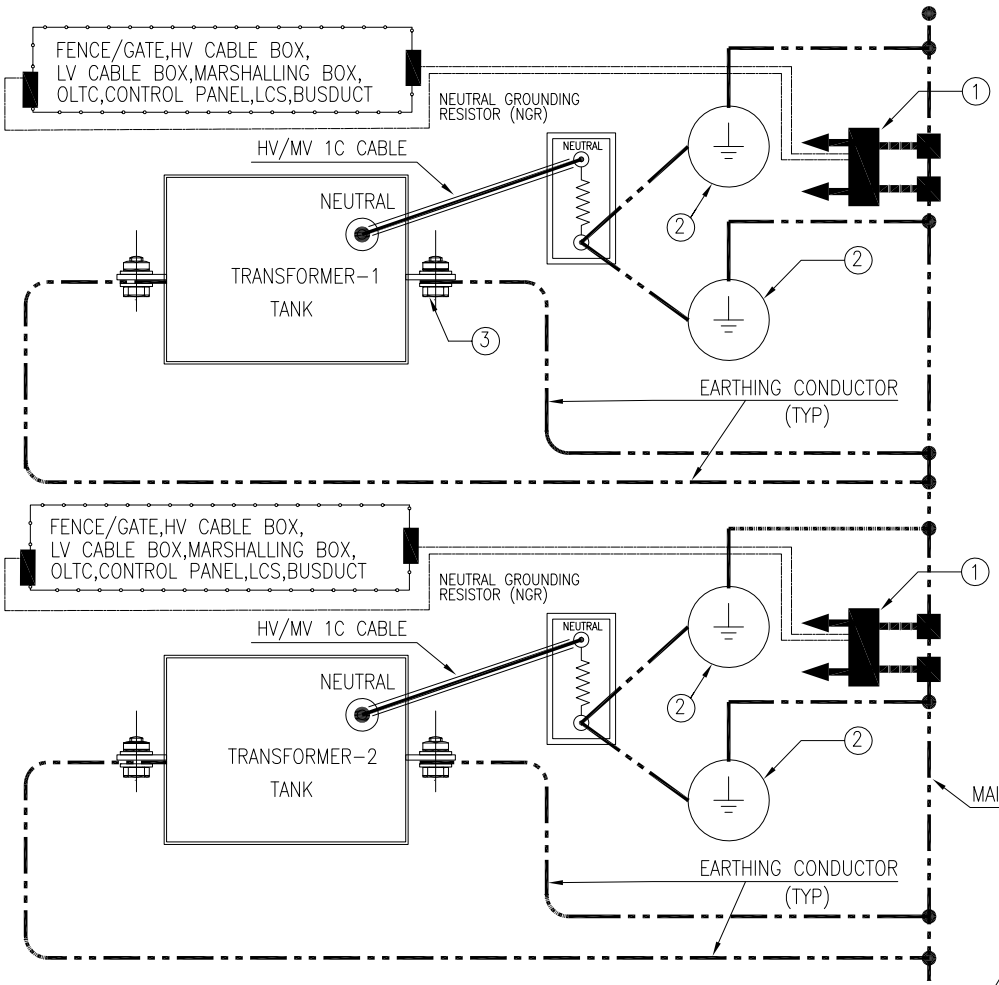

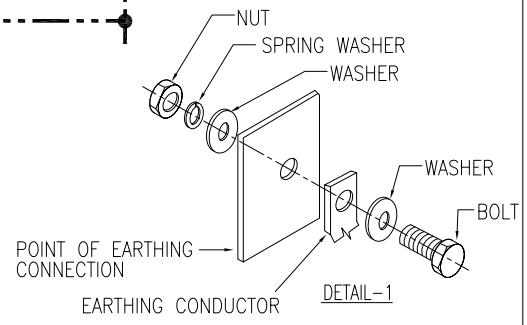

NOTES

1) ALL DIMENSIONS ARE IN 'mm' UNLESS OTHERWISE SPECIFIED.
2) THE EARTHING CONDUCTOR ROUTED FROM THE NEUTRAL TERMINAL/BUSHING OF THE TRANSFORMER TO THE NGR SHALL BE INSULATED FROM THE BODY OF THE TRANSFORMER
3) SIZE OF EARTHING CONDUCTORS SHALL BE AS PER THE 'EARTHING SCHEDULE' FOR THE PROJECT.
4) FOR POWER TRANSFORMER RAIL EARTHING SHALL BE AS PER THE 'EARTHING SCHEDULE' FOR THE PROJECT.

Code	Contract No.	Document ID	Part	Rev.
		PIN-LEP-ELT-4002		00

Rev.	Date	Name (Drawn/Prepared)		Date	Name (Checked)		Date	Name (Approved)		Description	Acc. Code	Cat. Code	Acc. Code	Status
00	29/10/15	RDK	ANK	29/10/15	RPM		29/10/15	RPM		ISSUED AS STANDARD				

BAR-Code

Store Location: Server/Share

Store Location: Folder

Store Name ETN1

Pro. Unit	TON	Group	Type of Document	Sheet
				1 / 1

Con. Unit	Scale	Order No.
	NTS	

thyssenkrupp

	Date	Name
Drawn	29/10/15	RDK
Prepared	29/10/15	ANK
Checked	29/10/15	RPM
Approved	29/10/15	RPM

Description

INSTALLATION STANDARDS – EARTHING
EARTHING OF TRANSFORMER WITH NEUTRAL GROUNDING THROUGH NGR (ETN1)

ISO A4

UH_BO_ISO_A4_P_E_tktSIndia.dwg / AG03_UH_BO_ISO_A4_P.dwg / 14.12.2016

© thyssenkrupp Industrial Solutions (India) Private Limited 2017. All rights reserved

ITEM	DESCRIPTION	MATERIAL	QTY.	SUPPLY BY	INSTALLATION BY
1	EARTHING CONDUCTOR AS PER EARTHING SCHEDULE	–	AS REQUIRED	ELECTRICAL CONTRACTOR	ELECTRICAL CONTRACTOR
2	EARTH PIT	–	AS REQUIRED	ELECTRICAL CONTRACTOR	ELECTRICAL CONTRACTOR
3	10 DIA 50 LONG HEXAGONAL HEAD BOLTS WITH NUTS,SPRING & PLAIN WASHERS, SUITABLE FOR CONNECTIONS SHOWN IN THIS DRAWING (REFER DETAIL–1)	GI	'X' NOS ('X'=AS REQUIRED)	ELECTRICAL CONTRACTOR	ELECTRICAL CONTRACTOR

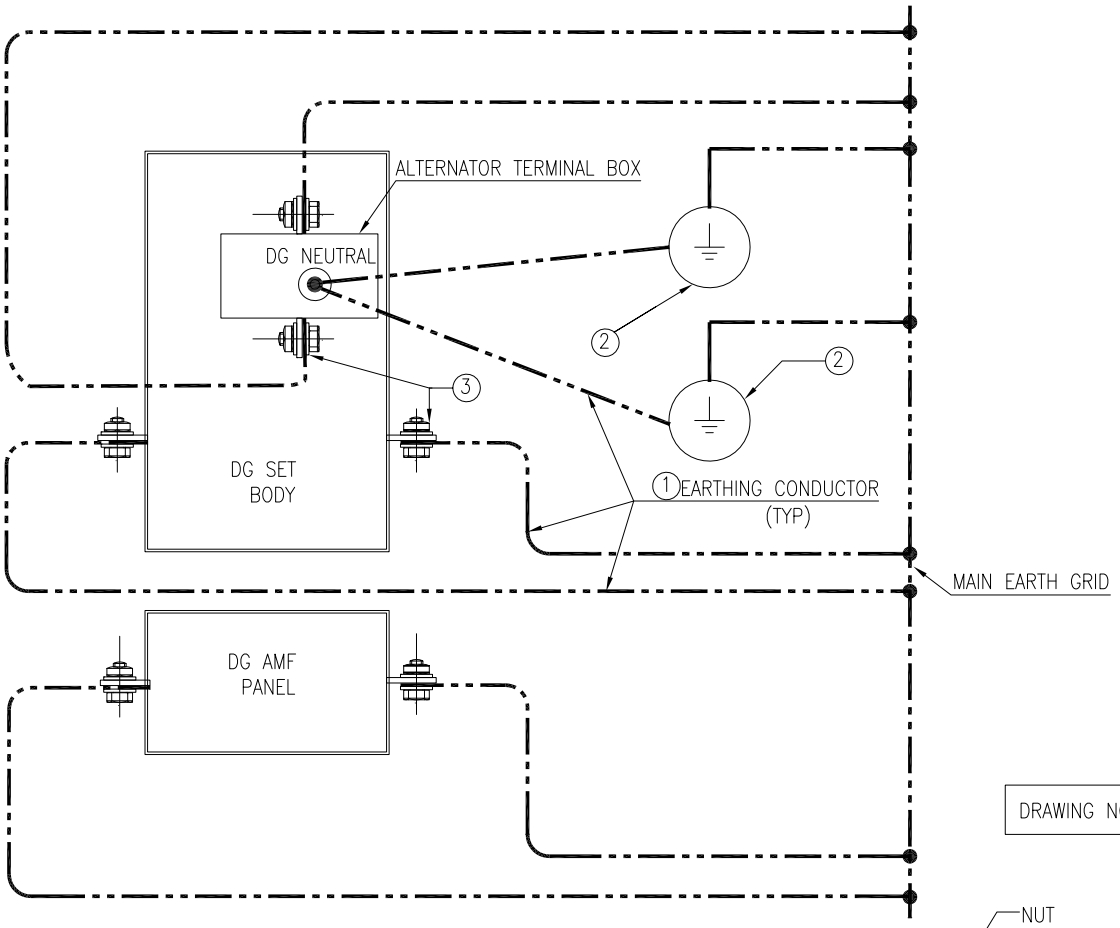

DRAWING NOT TO SCALE

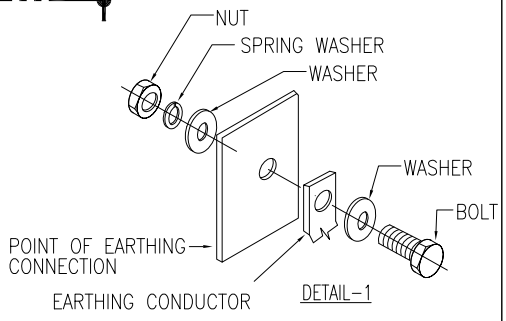

NOTES

1) ALL DIMENSIONS ARE IN 'mm' UNLESS OTHERWISE SPECIFIED.
2) THE EARTHING CONDUCTOR ROUTED FROM THE NEUTRAL TERMINAL/BUSHING OF THE DG TO THE NEUTRAL EARTH PIT SHALL BE INSULATED FROM THE BODY OF THE DG.
3) SIZE OF EARTHING CONDUCTORS SHALL BE AS PER THE 'EARTHING SCHEDULE' FOR THE PROJECT.
4) ENGINE, BED PLATE,ALTERNATOR OF THE GENERATING SET SHOULD BE BONDED TO DG SET BODY BY DG SET PACKAGE VENDOR.

Code	Contract No.	Document ID	Part	Rev.
		PIN–LEP–ELT–4002		00

Rev.	Date	Name (Drawn/Prepared)		Date	Name (Checked)		Date	Name (Approved)	Description	Acc. Code	Cat. Code	Acc. Code	Status
00	24/11/15	RDK	ANK	24/11/15	RPM		24/11/15	RPM	ISSUED AS STANDARD				

BAR–Code

Store Location: Server/Share

Store Location: Folder

Store Name: EDG1

Pro. Unit	TON	Group	Type of Document	Sheet
				1 / 1

Con. Unit	Scale	Order No.
	NTS	

thyssenkrupp

	Date	Name
Drawn	29/10/15	RDK
Prepared	24/11/15	ANK
Checked	24/11/15	RPM
Approved	24/11/15	RPM

Description
INSTALLATION STANDARDS – EARTHING
EARTHING OF DG SET
(EDG1)

ISO A4

UH_BO_ISO_A4_P_E_tktSIndia.dwg / AG03_UH_BO_ISO_A4_P.dwg / 14.12.2016

© thyssenkrupp Industrial Solutions (India) Private Limited 2017. All rights reserved

ITEM	DESCRIPTION	MATERIAL	QTY.	SUPPLY BY	INSTALLATION BY
1	EQUIPOTENTIAL BONDING STRIP (AS PER INSTALLATION DRAWING EEB1)	–	1 SET	ELECTRICAL CONTRACTOR	ELECTRICAL CONTRACTOR
2	EARTHING CONDUCTOR (AS PER EARTHING SCHEDULE)	–	AS REQUIRED	ELECTRICAL CONTRACTOR	ELECTRICAL CONTRACTOR
3	EARTHING STUB–UP (AS PER EARTHING SCHEDULE),	HDGI	2 NOs.	ELECTRICAL CONTRACTOR	ELECTRICAL CONTRACTOR

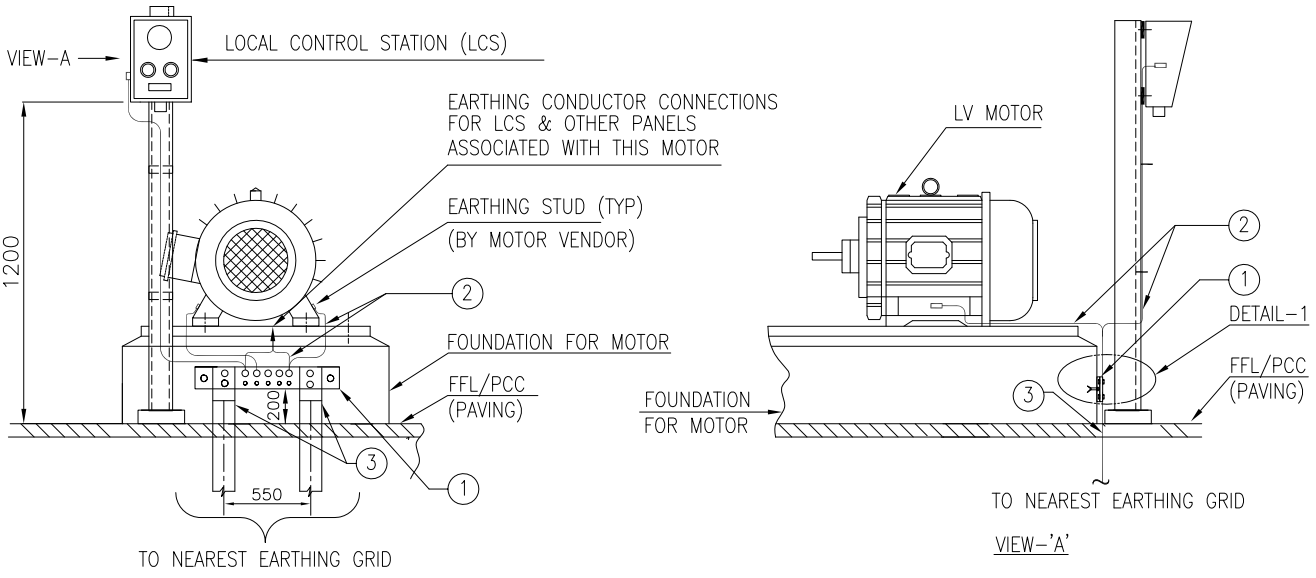

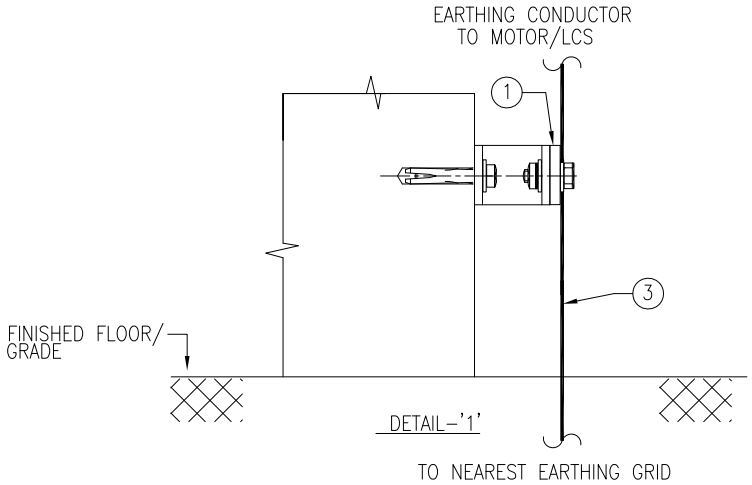

DRAWING NOT TO SCALE

NOTES
1) ALL DIMENSIONS ARE IN 'mm' UNLESS OTHERWISE SPECIFIED.
2) SIZE OF EARTHING CONDUCTOR SHALL BE AS PER THE 'EARTHING SCHEDULE' FOR THE PROJECT.

Code	Contract No.	Document ID	Part	Rev.
		PIN–LEP–ELT–4002		00

Rev.	Date	Name (Drawn/Prepared)		Date	Name (Checked)		Date	Name (Approved)		Description	Acc. Code	Cat. Code	Acc. Code	Status
00	29/10/15	RDK	ANK	29/10/15	RPM		29/10/15	RPM		ISSUED AS STANDARD				

BAR–Code

Store Location: Server/Share

Store Location: Folder

Store Name: EML1

Pro. Unit	TON	Group	Type of Document	Sheet
				1 / 1

Con. Unit	Scale	Order No.
	NTS	

thyssenkrupp

	Date	Name
Drawn	29/10/15	RDK
Prepared	29/10/15	ANK
Checked	29/10/15	RPM
Approved	29/10/15	RPM

Description
INSTALLATION STANDARDS – EARTHING
EARTHING OF LV MOTOR ON SEPARTE SKID (EML1)

ISO A4

UH_BO_ISO_A4_P_E_tktSIndia.dwg / AG03_UH_BO_ISO_A4_P.dwg / 14.12.2016

© thyssenkrupp Industrial Solutions (India) Private Limited 2017. All rights reserved

ITEM	DESCRIPTION	MATERIAL	QTY.	SUPPLY BY	INSTALLATION BY
1	EQUIPOTENTIAL BONDING STRIP (AS PER INSTALLATION DRAWING EEB1)	–	1 SET	ELECTRICAL CONTRACTOR	ELECTRICAL CONTRACTOR
2	EARTHING CONDUCTOR (AS PER EARTHING SCHEDULE)	–	AS REQUIRED	ELECTRICAL CONTRACTOR	ELECTRICAL CONTRACTOR
3	EARTHING STUB–UP (AS PER EARTHING SCHEDULE),	HDGI	2 NOs.	ELECTRICAL CONTRACTOR	ELECTRICAL CONTRACTOR

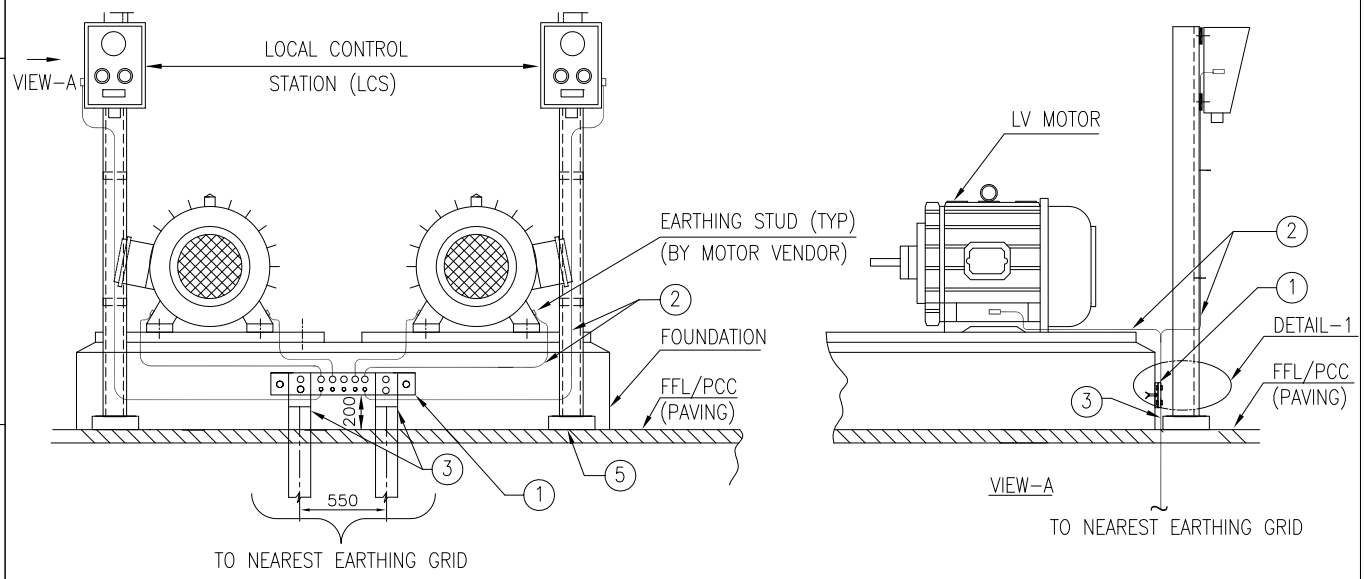

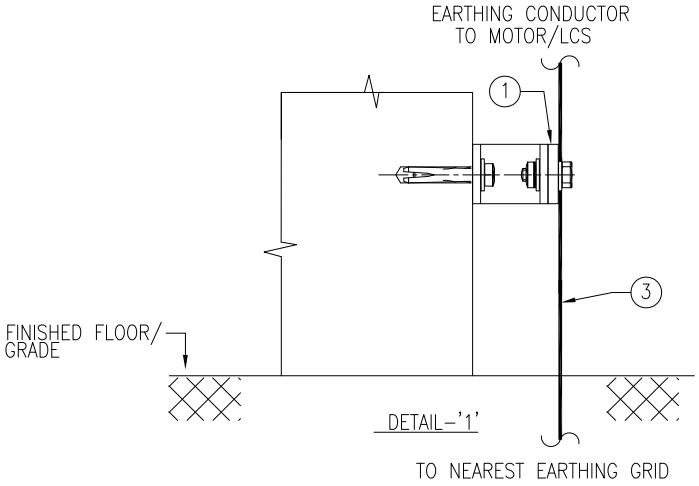

DRAWING NOT TO SCALE

NOTES
1) ALL DIMENSIONS ARE IN 'mm' UNLESS OTHERWISE SPECIFIED.
2) SIZE OF EARTHING CONDUCTOR SHALL BE AS PER THE 'EARTHING SCHEDULE' FOR THE PROJECT.

Code	Contract No.	Document ID	Part	Rev.
		PIN–LEP–ELT–4002		00

Rev.	Date	Name (Drawn/Prepared)		Date	Name (Checked)		Date	Name (Approved)	Description	Acc. Code	Cat. Code	Acc. Code	Status
00	29/10/15	RDK	ANK	29/10/15	RPM		29/10/15	RPM	ISSUED AS STANDARD				

BAR–Code

Store Location: Server/Share

Store Location: Folder

Store Name
EML2

Pro. Unit	TON	Group	Type of Document	Sheet
				1 / 1

Con. Unit	Scale	Order No.
	NTS	

thyssenkrupp

	Date	Name
Drawn	29/10/15	RDK
Prepared	29/10/15	ANK
Checked	29/10/15	RPM
Approved	29/10/15	RPM

Description
INSTALLATION STANDARDS – EARTHING
EARTHING OF TWO LV MOTOR
ON COMMON SKID
(EML2)

ISO A4

UH_BO_ISO_A4_P_E_tktSindia.dwg / AG03_UH_BO_ISO_A4_P.dwg / 14.12.2016

© thyssenkrupp Industrial Solutions (India) Private Limited 2017. All rights reserved

ITEM	DESCRIPTION	MATERIAL	QTY.	SUPPLY BY	INSTALLATION BY
1	EQUIPOTENTIAL BONDING STRIP (AS PER INSTALLATION DRAWING EEB3)	–	1 SET	ELECTRICAL CONTRACTOR	ELECTRICAL CONTRACTOR
2	EARTHING CONDUCTOR (AS PER EARTHING SCHEDULE)	–	AS REQUIRED	ELECTRICAL CONTRACTOR	ELECTRICAL CONTRACTOR

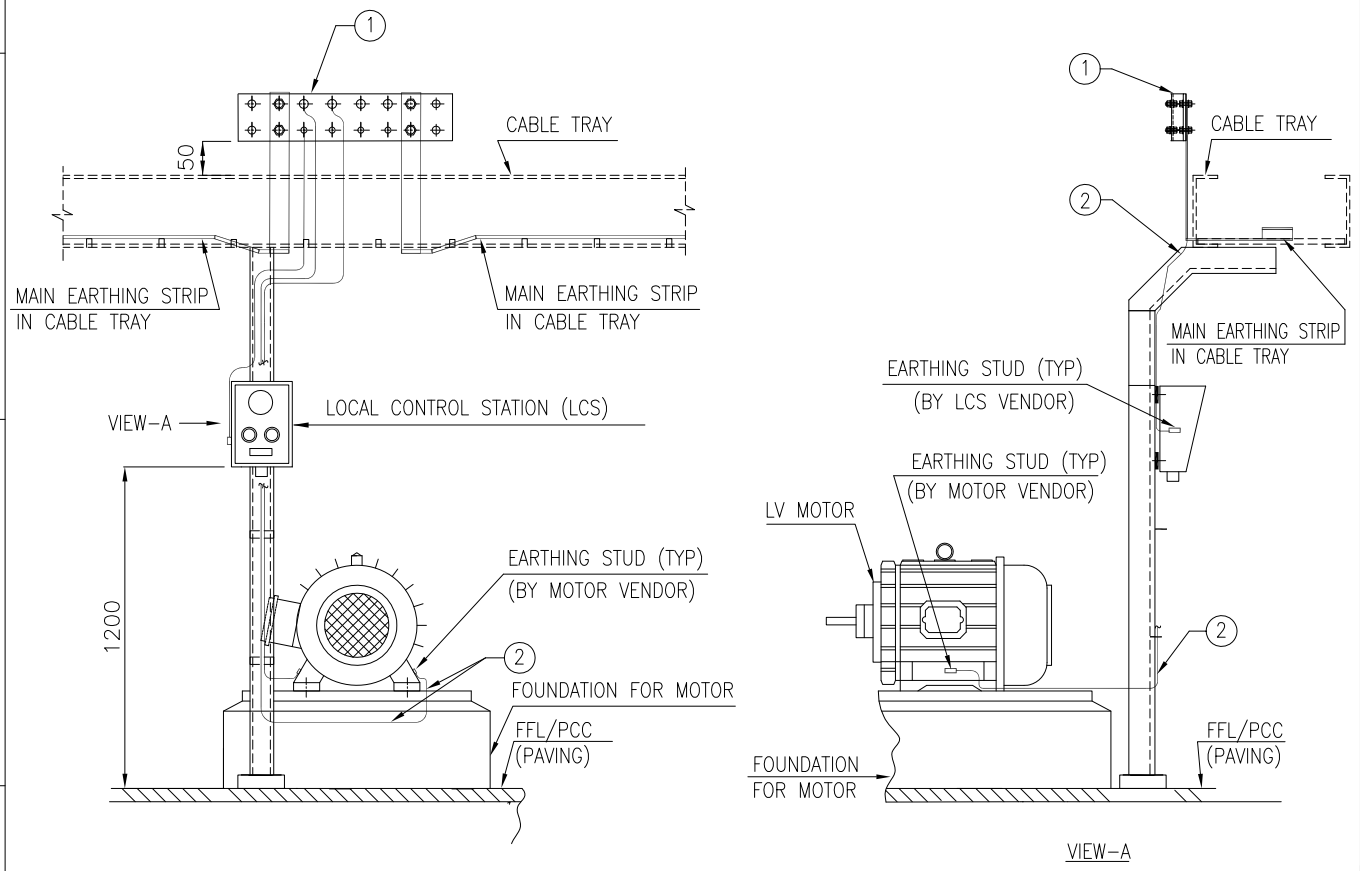

DRAWING NOT TO SCALE

NOTES

1) ALL DIMENSIONS ARE IN 'mm' UNLESS OTHERWISE SPECIFIED.
2) SIZE OF EARTHING CONDUCTOR SHALL BE AS PER THE 'EARTHING SCHEDULE' FOR THE PROJECT.

Code	Contract No.	Document ID	Part	Rev.
		PIN–LEP–ELT–4002		00

Rev.	Date	Name (Drawn/Prepared)		Date	Name (Checked)		Date	Name (Approved)		Description	Acc. Code	Cat. Code	Acc. Code	Status
00	29/10/15	RDK	ANK	29/10/15	RPM		29/10/15	RPM		ISSUED AS STANDARD				

BAR–Code

Store Location: Server/Share

Store Location: Folder

Store Name
EML3

Pro. Unit	TON	Group	Type of Document	Sheet
				1 / 1

Con. Unit	Scale	Order No.
	NTS	

thyssenkrupp

	Date	Name
Drawn	29/10/15	RDK
Prepared	29/10/15	ANK
Checked	29/10/15	RPM
Approved	29/10/15	RPM

Description
INSTALLATION STANDARDS – EARTHING
EARTHING OF LV MOTOR ON SEPARTE SKID
ABOVE GROUND EARTHING
(EML3)

ISO A4

UH_BO_ISO_A4_P_E_tktSIndia.dwg / AG03_UH_BO_ISO_A4_P.dwg / 14.12.2016

© thyssenkrupp Industrial Solutions (India) Private Limited 2017. All rights reserved

UH_BO_ISO_A4_P_E_tktSIndia.dwg / AG03_UH_BO_ISO_A4_P.dwg / 14.12.2016

ITEM	DESCRIPTION	MATERIAL	QTY.	SUPPLY BY	INSTALLATION BY
1	EQUIPOTENTIAL BONDING STRIP (AS PER INSTALLATION DRAWING EEB1)	–	1 SET	ELECTRICAL CONTRACTOR	ELECTRICAL CONTRACTOR
2	EARTHING CONDUCTOR (AS PER EARTHING SCHEDULE)	–	AS REQUIRED	ELECTRICAL CONTRACTOR	ELECTRICAL CONTRACTOR

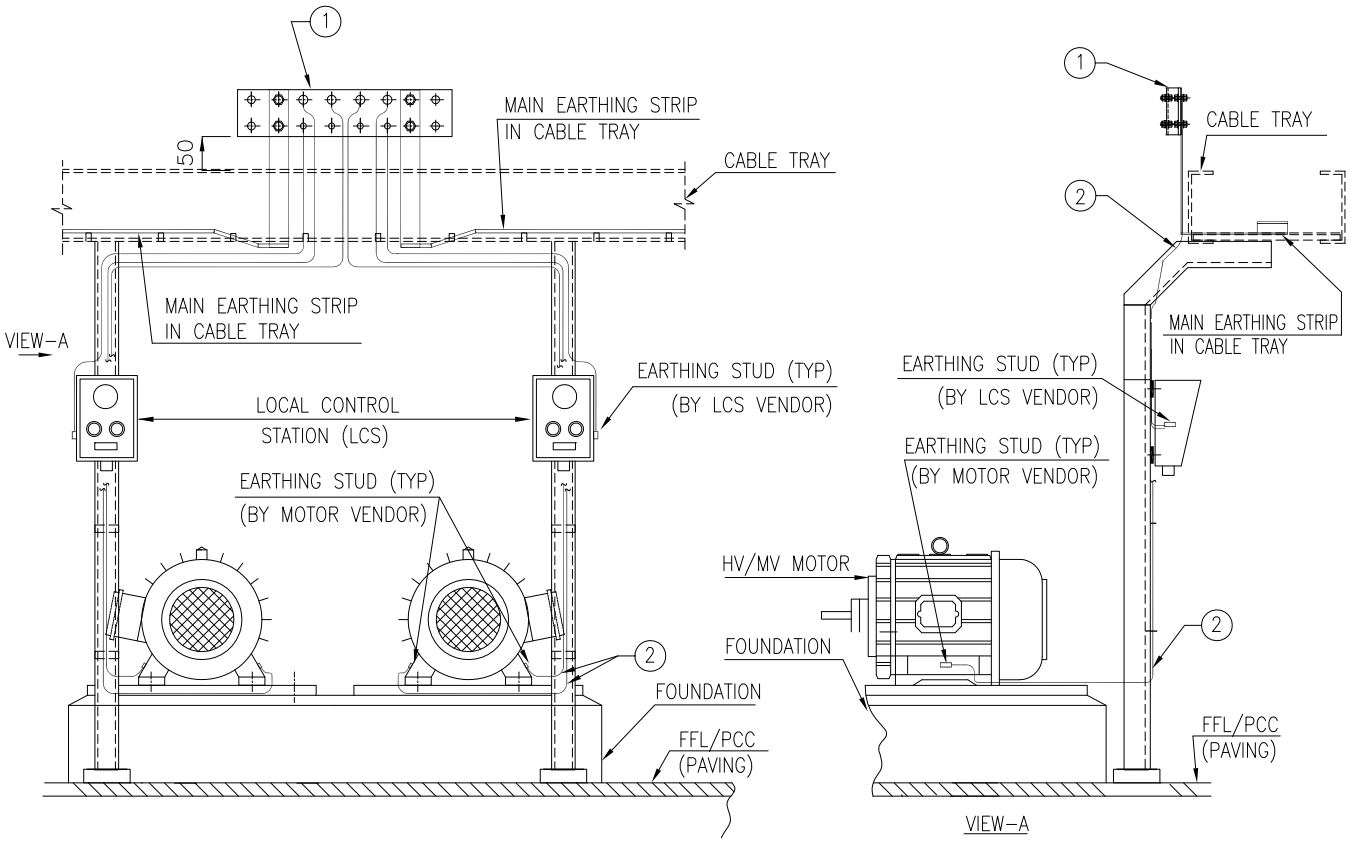

DRAWING NOT TO SCALE

NOTES
1) ALL DIMENSIONS ARE IN 'mm' UNLESS OTHERWISE SPECIFIED.
2) SIZE OF EARTHING CONDUCTOR SHALL BE AS PER THE 'EARTHING SCHEDULE' FOR THE PROJECT.

Code	Contract No.	Document ID	Part	Rev.
		PIN–LEP–ELT–4002		00

Rev.	Date	Name (Drawn/Prepared)		Date	Name (Checked)		Date	Name (Approved)		Description	Acc. Code	Cat. Code	Acc. Code	Status
00	29/10/15	RDK	ANK	29/10/15	RPM		29/10/15	RPM		ISSUED AS STANDARD				

BAR–Code

Store Location: Server/Share

Store Location: Folder

Store Name
EML1

Pro. Unit	TON	Group	Type of Document	Sheet
				1 / 1

Con. Unit	Scale	Order No.
	NTS	

thyssenkrupp

	Date	Name
Drawn	29/10/15	RDK
Prepared	29/10/15	ANK
Checked	29/10/15	RPM
Approved	29/10/15	RPM

Description
INSTALLATION STANDARDS – EARTHING
EARTHING OF TWO LV MOTOR ON COMMON SKID ABOVE GROUND EARTHING
(EML4)

ISO A4

© thyssenkrupp Industrial Solutions (India) Private Limited 2017. All rights reserved

ITEM	DESCRIPTION	MATERIAL	QTY.	SUPPLY BY	INSTALLATION BY
1	EQUIPOTENTIAL BONDING STRIP (AS PER INSTALLATION DRAWING EEB1)	–	1 SET	ELECTRICAL CONTRACTOR	ELECTRICAL CONTRACTOR
2	EARTHING CONDUCTOR (AS PER EARTHING SCHEDULE)	–	AS REQUIRED	ELECTRICAL CONTRACTOR	ELECTRICAL CONTRACTOR
3	EARTHING STUB-UP (AS PER EARTHING SCHEDULE),	HDGI	2 NOs.	ELECTRICAL CONTRACTOR	ELECTRICAL CONTRACTOR

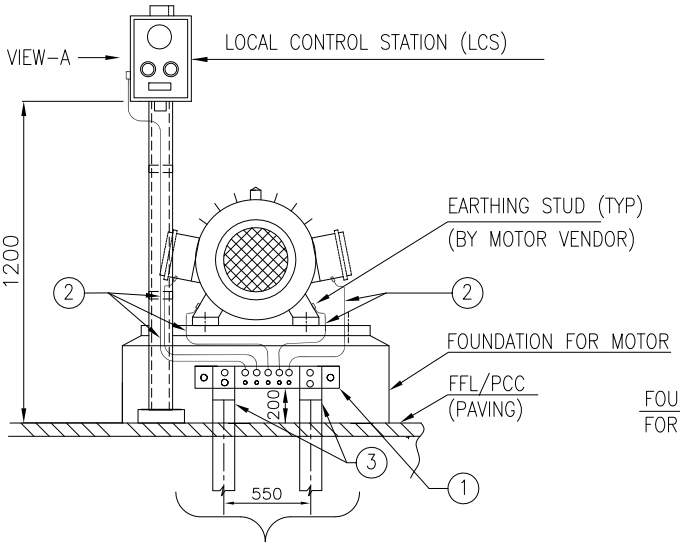

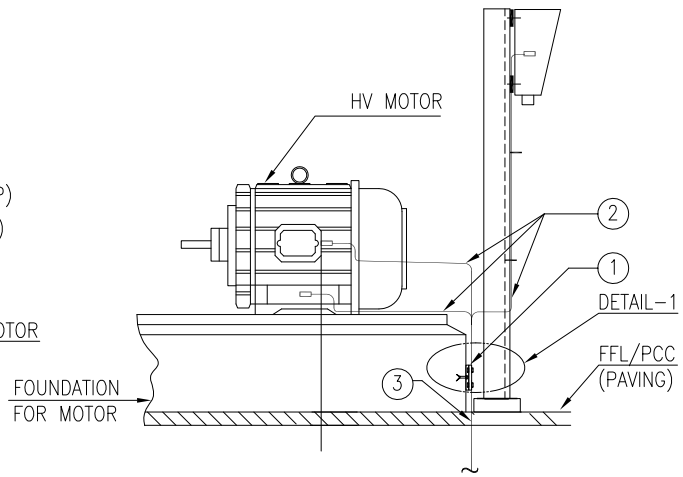

VIEW–'A'

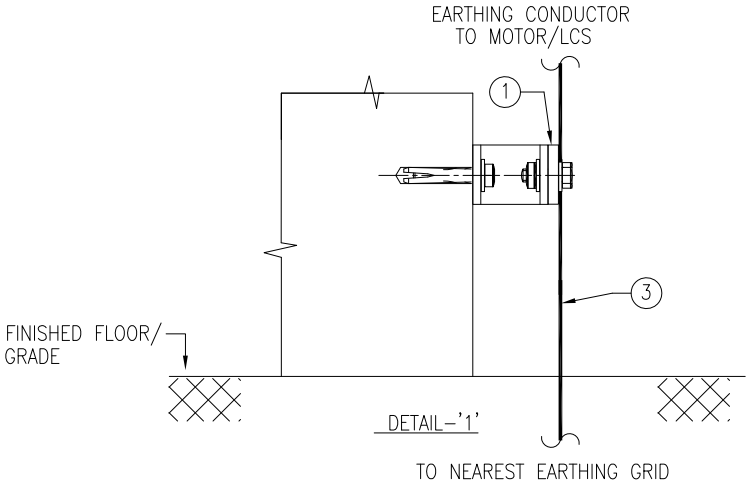

DETAIL–'1'

DRAWING NOT TO SCALE

NOTES
1) ALL DIMENSIONS ARE IN 'mm' UNLESS OTHERWISE SPECIFIED.
2) SIZE OF EARTHING CONDUCTOR SHALL BE AS PER THE 'EARTHING SCHEDULE' FOR THE PROJECT.

Code	Contract No.	Document ID	Part	Rev.
		PIN–LEP–ELT–4002		00

Rev.	Date	Name (Drawn/Prepared)		Date	Name (Checked)		Date	Name (Approved)		Description	Acc. Code	Cat. Code	Acc. Code	Status
00	29/10/15	RDK	ANK	29/10/15	RPM		29/10/15	RPM		ISSUED AS STANDARD				

BAR–Code

Store Location: Server/Share

Store Location: Folder

Store Name
EMH1

Pro. Unit	TON	Group	Type of Document	Sheet
				1 / 1

Con. Unit	Scale	Order No.
	NTS	

thyssenkrupp

	Date	Name
Drawn	29/10/15	RDK
Prepared	29/10/15	ANK
Checked	29/10/15	RPM
Approved	29/10/15	RPM

Description
INSTALLATION STANDARDS – EARTHING
EARTHING OF HV MOTOR
(EMH1)

ISO A4

UH_BO_ISO_A4_P_E_tktSIndia.dwg / AG03_UH_BO_ISO_A4_P.dwg / 14.12.2016

© thyssenkrupp Industrial Solutions (India) Private Limited 2017. All rights reserved

ITEM	DESCRIPTION	MATERIAL	QTY.	SUPPLY BY	INSTALLATION BY
1	EQUIPOTENTIAL BONDING STRIP (AS PER INSTALLATION DRAWING EEB3)	–	1 SET	ELECTRICAL CONTRACTOR	ELECTRICAL CONTRACTOR
2	EARTHING CONDUCTOR (AS PER EARTHING SCHEDULE)	–	AS REQUIRED	ELECTRICAL CONTRACTOR	ELECTRICAL CONTRACTOR

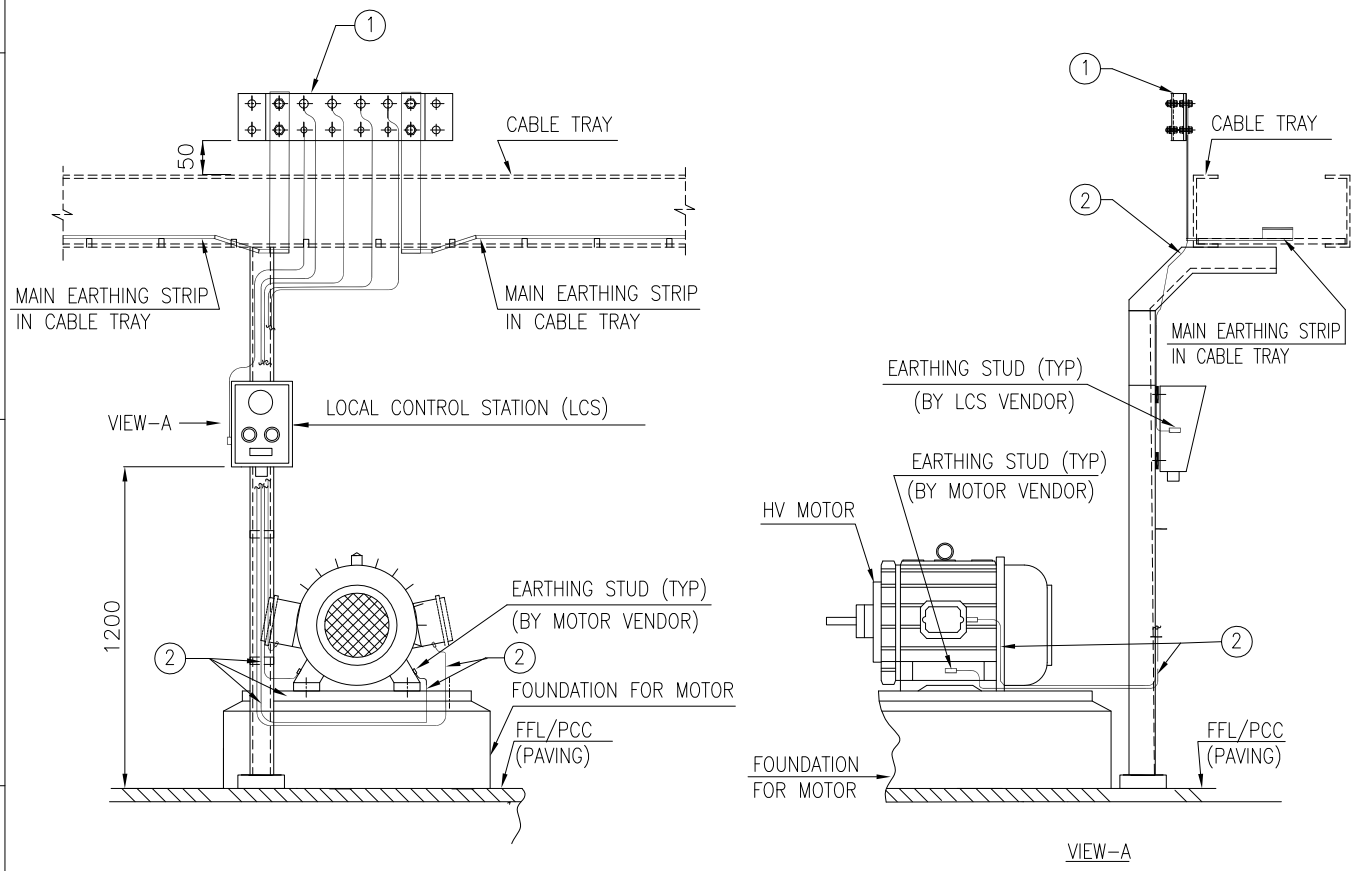

DRAWING NOT TO SCALE

NOTES

1) ALL DIMENSIONS ARE IN 'mm' UNLESS OTHERWISE SPECIFIED.
2) SIZE OF EARTHING CONDUCTOR SHALL BE AS PER THE 'EARTHING SCHEDULE' FOR THE PROJECT.

Code	Contract No.	Document ID	Part	Rev.
		PIN–LEP–ELT–4002		00

Rev.	Date	Name (Drawn/Prepared)		Date	Name (Checked)		Date	Name (Approved)		Description	Acc. Code	Cat. Code	Acc. Code	Status
00	29/10/15	RDK	ANK	29/10/15	RPM		29/10/15	RPM		ISSUED AS STANDARD				

BAR–Code

Store Location: Server/Share

Store Location: Folder

Store Name
EMH2

Pro. Unit	TON	Group	Type of Document	Sheet
				1 / 1

Con. Unit	Scale	Order No.
	NTS	

thyssenkrupp

	Date	Name
Drawn	29/10/15	RDK
Prepared	29/10/15	ANK
Checked	29/10/15	RPM
Approved	29/10/15	RPM

Description
INSTALLATION STANDARDS – EARTHING
EARTHING OF HV MOTOR
ABOVE GROUND EARTHING
(EMH2)

ISO A4

UH_BO_ISO_A4_P_E_tktSIndia.dwg / AG03_UH_BO_ISO_A4_P.dwg / 14.12.2016

© thyssenkrupp Industrial Solutions (India) Private Limited 2017. All rights reserved

ITEM	DESCRIPTION	MATERIAL	QTY.	SUPPLY BY	INSTALLATION BY
1	EARTHING CONDUCTOR–SIZE OF EARTHING CONDUTOR SHALL BE AS PER THE 'EARTHING SCHEDULE' FOR THE PROJECT.		AS REQUIRED	ELECTRICAL CONTRACTOR	ELECTRICAL CONTRACTOR
2	8 DIA HEXAGONAL HEAD BOLTS–25mm LONG, WITH NUTS, SPRING & PLAIN WASHERS, SUITABLE FOR CONNECTIONS SHOWN IN THIS DRAWING (REFER DETAIL–2)	GI	AS REQUIRED	ELECTRICAL CONTRACTOR	ELECTRICAL CONTRACTOR
3	LUG FOR EARTHING CONDUCTOR		AS REQUIRED	ELECTRICAL CONTRACTOR	ELECTRICAL CONTRACTOR

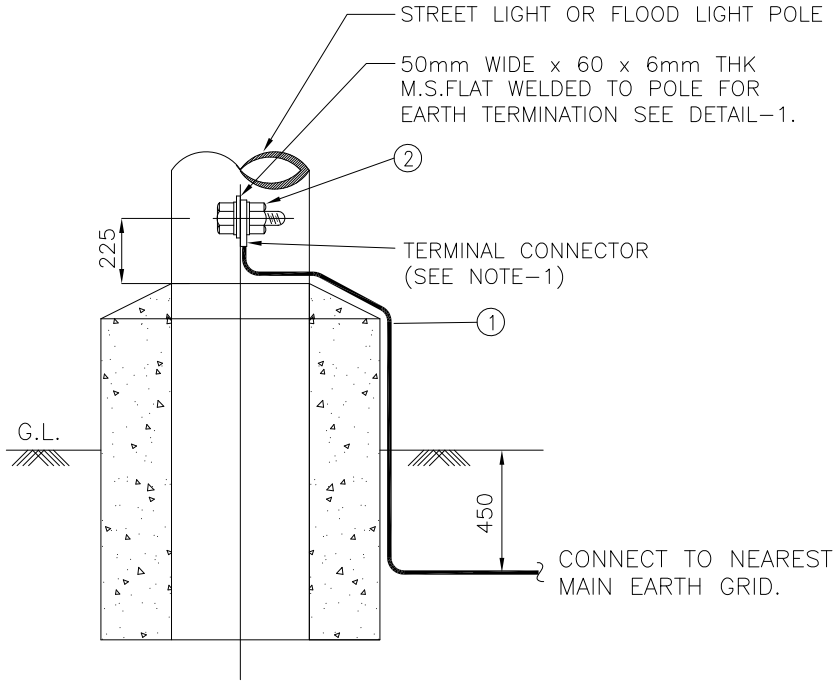

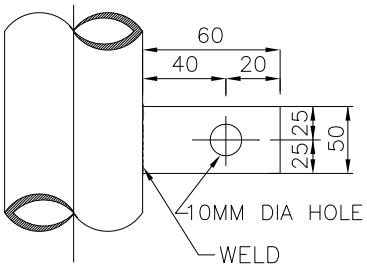

DETAIL–1

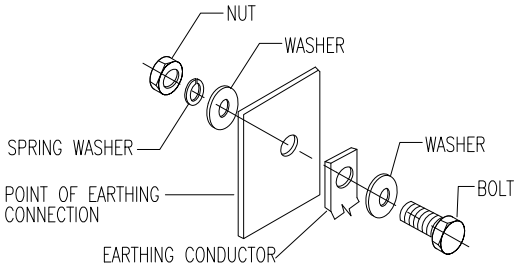

DETAIL–2

DRAWING NOT TO SCALE

NOTES:
1) ALL DIMENSIONS ARE IN 'mm' UNLESS OTHERWISE SPECIFIED.
2) USE TWO EARTH WIRES IF VOLTAGE IN THE POLE, JUNCTION BOX IS 415VOLTS.

Code	Contract No.	Document ID	Part	Rev.
		PIN–LEP–ELT–4002		00

Rev.	Date	Name (Drawn/Prepared)		Date	Name (Checked)		Date	Name (Approved)		Description	Acc. Code	Cat. Code	Acc. Code	Status
00	29/10/15	RDK	ANK	29/10/15	RPM		29/10/15	RPM		ISSUED AS STANDARD				

BAR–Code

Store Location: Server/Share

Store Location: Folder

Store Name
ESL1

Pro. Unit	TON	Group	Type of Document	Sheet
				1 / 1

Con. Unit	Scale	Order No.
	NTS	

	Date	Name
Drawn	29/10/15	RDK
Prepared	29/10/15	ANK
Checked	29/10/15	RPM
Approved	29/10/15	RPM

Description
INSTALLATION STANDARDS – EARTHING
TYPICAL EARTH CONNECTION
FOR STREET LIGHT POLE
(ESL1)

ISO A4

ITEM	DESCRIPTION	MATERIAL	QTY.	SUPPLY BY	INSTALLATION BY
1	EARTHING CONDUCTOR–SIZE OF EARTHING CONDUTOR SHALL BE AS PER THE 'EARTHING SCHEDULE' FOR THE PROJECT.		AS REQUIRED	ELECTRICAL CONTRACTOR	ELECTRICAL CONTRACTOR
2	8 DIA HEXAGONAL HEAD BOLTS–25mm LONG, WITH NUTS, SPRING & PLAIN WASHERS, SUITABLE FOR CONNECTIONS SHOWN IN THIS DRAWING (REFER DETAIL–2)	GI	AS REQUIRED	ELECTRICAL CONTRACTOR	ELECTRICAL CONTRACTOR
3	50mm DIA & 2500mm LONG PIPE	GI	1 NO.	ELECTRICAL CONTRACTOR	ELECTRICAL CONTRACTOR
4	LUG FOR EARTHING CONDUCTOR		AS REQUIRED	ELECTRICAL CONTRACTOR	ELECTRICAL CONTRACTOR

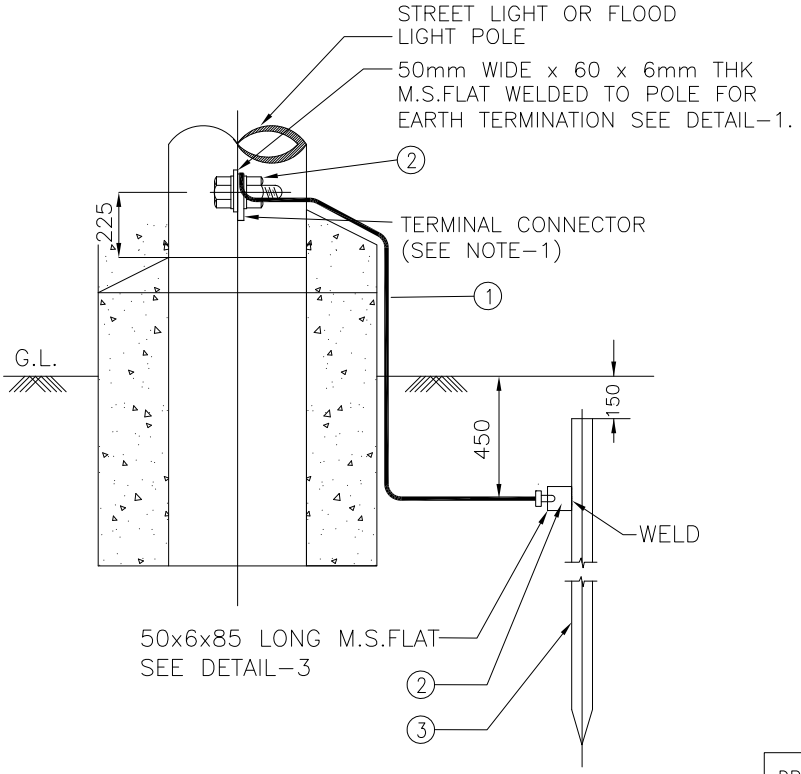

DRAWING NOT TO SCALE

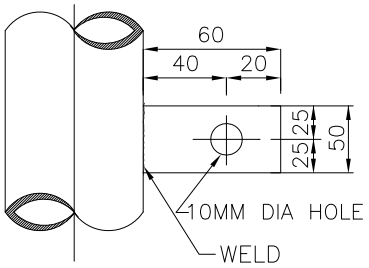

DETAIL–1

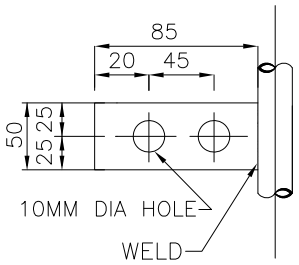

DETAIL–3

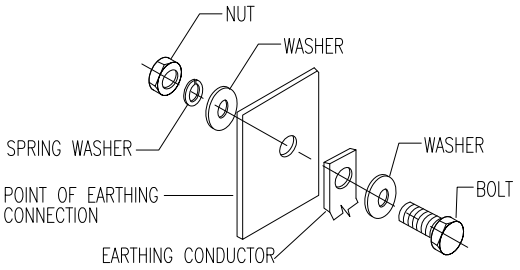

DETAIL–2

NOTES:
1) ALL DIMENSIONS ARE IN 'mm' UNLESS OTHERWISE SPECIFIED.
2) USE TWO EARTH WIRES IF VOLTAGE IN THE POLE, JUNCTION BOX IS 415VOLTS.

Code	Contract No.	Document ID	Part	Rev.
		PIN–LEP–ELT–4002		00

Rev.	Date	Name (Drawn/Prepared)		Date	Name (Checked)		Date	Name (Approved)	Description	Acc. Code	Cat. Code	Acc. Code	Status
00	29/10/15	RDK	ANK	29/10/15	RPM		29/10/15	RPM	ISSUED AS STANDARD				

BAR–Code

Store Location: Server/Share

Store Location: Folder

Store Name
ESL2

Pro. Unit	TON	Group	Type of Document	Sheet
				1 / 1

Con. Unit	Scale	Order No.
	NTS	

thyssenkrupp

	Date	Name
Drawn	29/10/15	RDK
Prepared	29/10/15	ANK
Checked	29/10/15	RPM
Approved	29/10/15	RPM

Description
INSTALLATION STANDARDS – EARTHING TYPICAL EARTH CONNECTION FOR STREET LIGHT POLE WITH EARTH ROD (ESL2)

ISO A4

UH_BO_ISO_A4_P_E_tktSIndia.dwg / AG03_UH_BO_ISO_A4_P.dwg / 14.12.2016

© thyssenkrupp Industrial Solutions (India) Private Limited 2017. All rights reserved

ITEM	DESCRIPTION	MATERIAL	QTY.	SUPPLY BY	INSTALLATION BY
1	EARTHING CONDUCTOR. SIZE OF EARTHING CONDUTOR & MATERIAL SHALL BE AS PER THE 'EARTHING SCHEDULE' FOR THE PROJECT.	–	AS REQUIRED	ELECTRICAL CONTRACTOR	ELECTRICAL CONTRACTOR
2	HEXAGONAL HEAD BOLTS–25mm LONG, WITH NUTS & WASHERS SUITABLE FOR CONNECTIONS SHOWN IN THIS DRAWING (REFER DETAIL–1)	GI	AS REQUIRED	ELECTRICAL CONTRACTOR	ELECTRICAL CONTRACTOR
3	CABLE LUG SUITABLE FOR THE EARTHING CONDUCTOR	–	AS REQUIRED	ELECTRICAL CONTRACTOR	ELECTRICAL CONTRACTOR

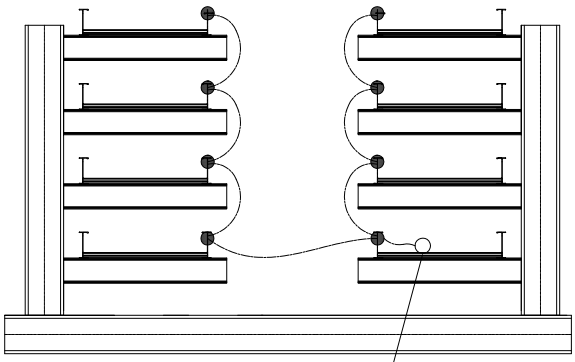

CABLE TRAY BONDING
ON PIPERACK,
(EVERY 50 METER)

EARTHING CONDUCTOR
IN CABLE TRAY

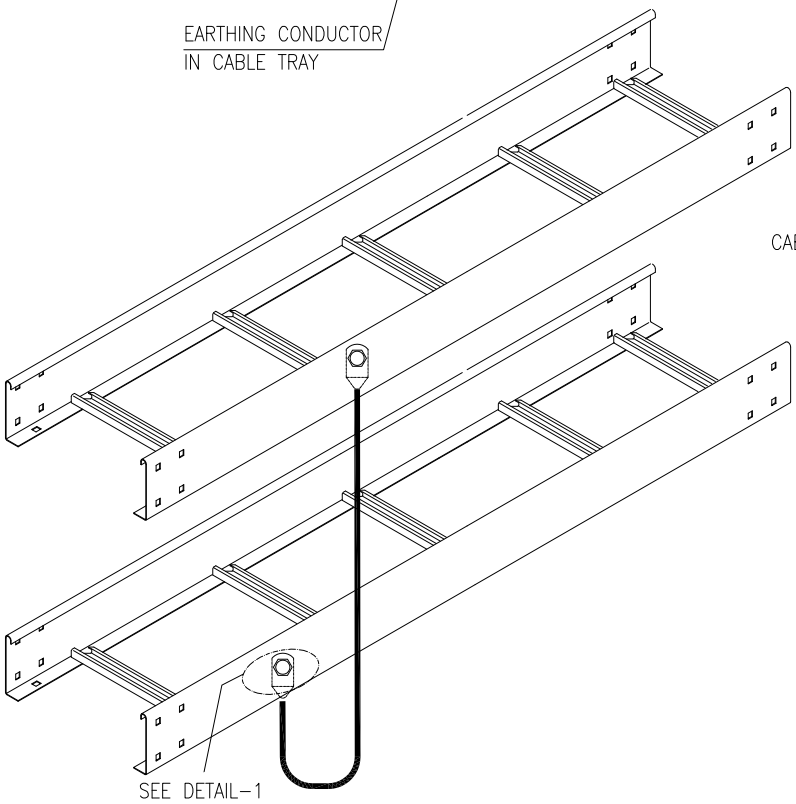

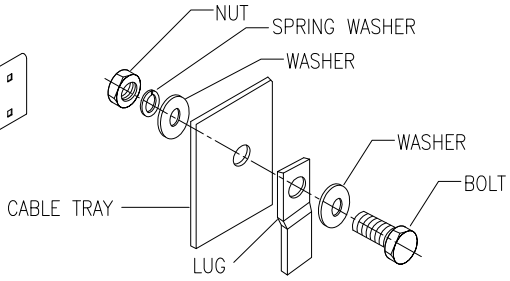

DETAIL–1

DRAWING NOT TO SCALE

Code	Contract No.	Document ID	Part	Rev.
		PIN–LEP–ELT–4002		00

Rev.	Date	Name (Drawn/Prepared)		Date	Name (Checked)		Date	Name (Approved)	Description	Acc. Code	Cat. Code	Acc. Code	Status
00	29/10/15	RDK	ANK	29/10/15	RPM		29/10/15	RPM	ISSUED AS STANDARD				

BAR–Code

Store Location: Server/Share

Store Location: Folder

Store Name ETB1

Pro. Unit	TON	Group	Type of Document	Sheet
				1 / 1

Con. Unit	Scale	Order No.
	NTS	

thyssenkrupp

	Date	Name
Drawn	29/10/15	RDK
Prepared	29/10/15	ANK
Checked	29/10/15	RPM
Approved	29/10/15	RPM

Description
INSTALLATION STANDARDS – EARTHING
EARTH BONDING OF CABLE TRAYS
(ETB1)

ISO A4

UH_BO_ISO_A4_P_E_tktSIndia.dwg / AG03_UH_BO_ISO_A4_P.dwg / 14.12.2016

© thyssenkrupp Industrial Solutions (India) Private Limited 2017. All rights reserved

ITEM	DESCRIPTION	MATERIAL	QTY.	SUPPLY BY	INSTALLATION BY
1	EARTHING PIPE – 3500mm LONG,50 DIA N.B., CLASS–B, TAPERED AT ONE END, WITH 12 DIA THROUGH HOLES AT EVERY 75mm.	HDGI	1 NO.	ELECTRICAL CONTRACTOR	ELECTRICAL CONTRACTOR
2	TEST LINK ASSEMBLY–50(W)X6(T), STRIP, BENT TO SHAPE OF ITEM–1, WITH 4 NOs 12 DIA HOLES AND ANOTHER STRIP WITH 6NOs 12 DIA HOLES(REFER DETAIL–1)	HDGI	1 SET	ELECTRICAL CONTRACTOR	ELECTRICAL CONTRACTOR
3	FUNNEL, WITH WIRE MESH–SUITABLE FOR TACK WELDED TO TIP OF ITEM–1.	HDGI	1 NO.	ELECTRICAL CONTRACTOR	ELECTRICAL CONTRACTOR
4	10 DIA HEXAGONAL HEAD BOLTS–60mm LONG, WITH NUTS,SPRING & PLAIN WASHERS, SUITABLE FOR CONNECTIONS SHOWN IN THIS DRAWING (REFER DETAIL–4)	GI	6 SETS	ELECTRICAL CONTRACTOR	ELECTRICAL CONTRACTOR
5	PIPE SLEEVE–150 DIA, FOR ENTRY OF EARTHING CONDUCTOR (REFER DETAIL–2)	PVC	0.8MTRS	*CIVIL/ELECTRICAL CONTRACTOR	*CIVIL/ELECTRICAL CONTRACTOR
6	EARTH PIT CHAMBER (TYPE B) REFER NOTE–3	REINFORCED CONCERETE	1 NO.	*CIVIL/ELECTRICAL CONTRACTOR	*CIVIL/ELECTRICAL CONTRACTOR
7	EARTH PIT COVER (TYPE B) REFER NOTE–3	REINFORCED CONCERETE	1 NO.	*CIVIL/ELECTRICAL CONTRACTOR	*CIVIL/ELECTRICAL CONTRACTOR
8	CHARCOAL, SALT & SAND	–	1 LOT	ELECTRICAL CONTRACTOR	ELECTRICAL CONTRACTOR

* CIVIL/ELECTRICAL SCOPE SHALL BE DECIDED PROJECT SPECIFIC

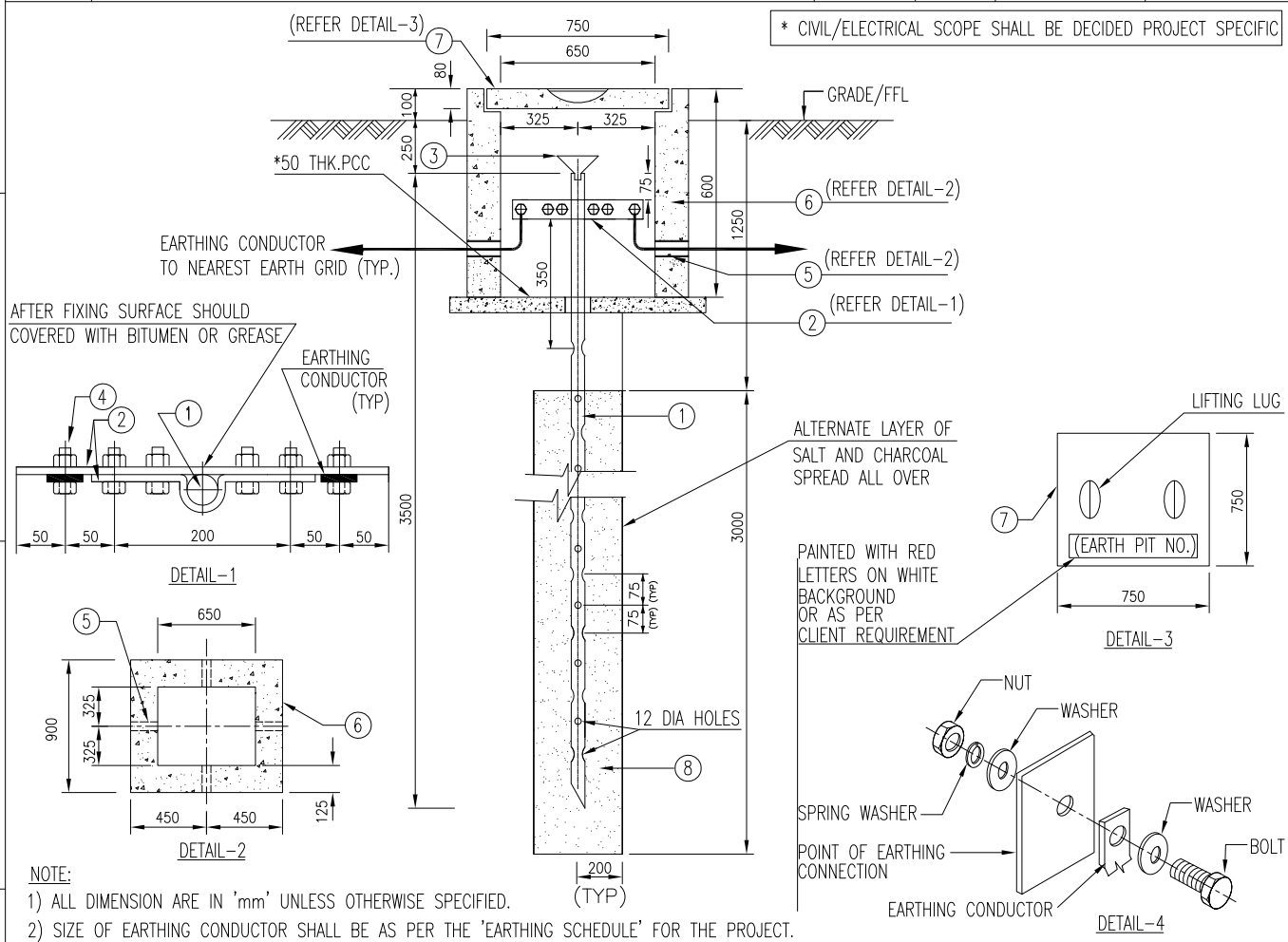

NOTE:

1) ALL DIMENSION ARE IN 'mm' UNLESS OTHERWISE SPECIFIED.
2) SIZE OF EARTHING CONDUCTOR SHALL BE AS PER THE 'EARTHING SCHEDULE' FOR THE PROJECT.
3) FOR EARTHING PIT CHAMBER & EARTH PIT COVER DETAIL REFER CIVIL STANDARD DRG.NO. PIN–LEP–CVC–1013.

DRAWING NOT TO SCALE

Code	Contract No.	Document ID	Part	Rev.
		PIN–LEP–ELT–4002		00

Rev.	Date	Name (Drawn/Prepared)	Date	Name (Checked)	Date	Name (Approved)	Description	Acc. Code	Cat. Code	Acc. Code	Status
00	24/11/15	RDK	ANK	24/11/15	RPM	24/11/15	RPM	ISSUED AS STANDARD			

BAR–Code

Store Location: Server/Share

Store Location: Folder

Store Name
EEP1

Pro. Unit	TON	Group	Type of Document	Sheet
				1 / 1

Con. Unit	Scale	Order No.
	NTS	

thyssenkrupp

	Date	Name
Drawn	24/11/15	RDK
Prepared	24/11/15	ANK
Checked	24/11/15	RPM
Approved	24/11/15	RPM

Description
INSTALLATION STANDARDS – EARTHING
EARTH PIT WITH HDGI PIPE ELECTRODE
FOR UNPAVED AREA (EEP1)

ISO A4

UH_BO_ISO_A4_P_E_tktSIndia.dwg / AG03_UH_BO_ISO_A4_P.dwg / 14.12.2016

© thyssenkrupp Industrial Solutions (India) Private Limited 2017. All rights reserved

ITEM	DESCRIPTION	MATERIAL	QTY.	SUPPLY BY	INSTALLATION BY
1	EARTHING ROD, 19 DIA, 3500mm LONG	COPPER COATED STEEL	1NO.	ELECTRICAL CONTRACTOR	ELECTRICAL CONTRACTOR
2	TEST LINK ASSEMBLY-50(W)X6(T), STRIP, BENT TO SHAPE OF ITEM-1, WITH 4 NOs 12 DIA HOLES AND ANOTHER STRIP WITH 6NOs 12 DIA HOLES(REFER DETAIL-1)	COPPER COATED STEEL	1 SET	ELECTRICAL CONTRACTOR	ELECTRICAL CONTRACTOR
3	10 DIA HEXAGONAL HEAD BOLTS-60mm LONG, WITH NUTS,SPRING & PLAIN WASHERS, SUITABLE FOR CONNECTIONS SHOWN IN THIS DRAWING (REFER DETAIL-4)	SS304	6 SETS	ELECTRICAL CONTRACTOR	ELECTRICAL CONTRACTOR
4	PIPE SLEEVE-150 DIA, FOR ENTRY OF EARTHING CONDUCTOR (REFER DETAIL-2)	PVC	0.8MTRS	*CIVIL/ELECTRICAL CONTRACTOR	*CIVIL/ELECTRICAL CONTRACTOR
5	EARTH PIT CHAMBER (TYPE B) REFER NOTE-3	REINFORCED CONCERETE	1NO.	*CIVIL/ELECTRICAL CONTRACTOR	*CIVIL/ELECTRICAL CONTRACTOR
6	EARTH PIT COVER (TYPE B) REFER NOTE-3	REINFORCED CONCERETE	1NO.	*CIVIL/ELECTRICAL CONTRACTOR	*CIVIL/ELECTRICAL CONTRACTOR

* CIVIL/ELECTRICAL SCOPE SHALL BE DECIDED PROJECT SPECIFIC

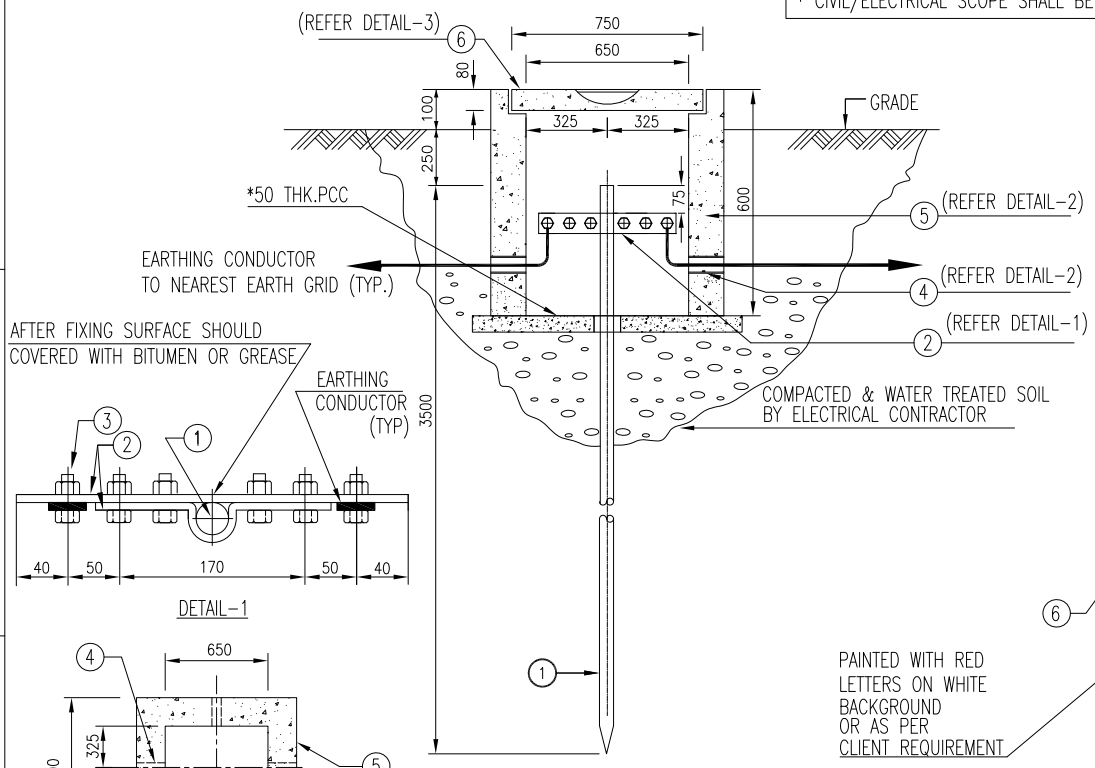

DETAIL-1

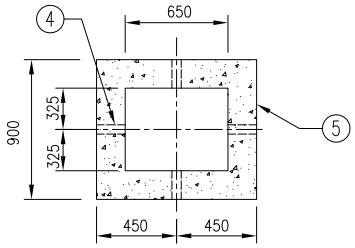

DETAIL-2

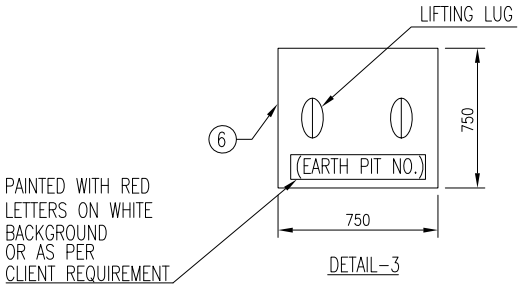

DETAIL-3

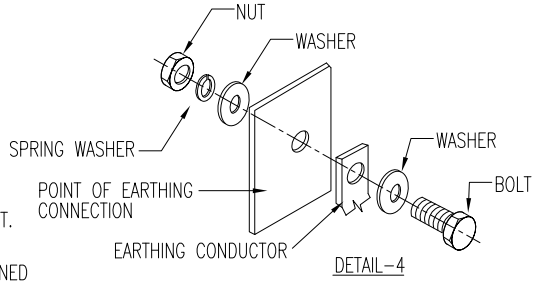

DETAIL-4

NOTES

1) ALL DIMENSION ARE IN 'mm' UNLESS OTHERWISE SPECIFIED.
2) SIZE OF EARTHING CONDUCTOR SHALL BE AS PER THE 'EARTHING SCHEDULE' FOR THE PROJECT.
3) IN GENERAL THE TOTAL LENGTH OF THE ROD ELECTRODE SHALL BE 3.5MTRS. IF ELECTRODES ARE TO BE DRIVEN DEEPER THAN 3.5MTRS, THIS REQUIREMENT SHALL BE SPECIFICALLY MENTIONED IN THE 'EARTHING LAYOUT' FOR THE PROJECT & THE SAME SHALL BE FOLLOWED DURING INSTALLATION.
4) FOR EARTHING PIT CHAMBER & EARTH PIT COVER DETAIL REFER CIVIL STANDARD DRG.NO. PIN-LEP-CVC-1013.

DRAWING NOT TO SCALE

Code	Contract No.	Document ID	Part	Rev.
		PIN-LEP-ELT-4002		00

Rev.	Date	Name (Drawn/Prepared)	Date	Name (Checked)	Date	Name (Approved)	Description	Acc. Code	Cat. Code	Acc. Code	Status
00	24/11/15	RDK	24/11/15	RPM	24/11/15	RPM	ISSUED AS STANDARD				

BAR-Code

Store Location: Server/Share

Store Location: Folder

Store Name: EEP2

Pro. Unit	TON	Group	Type of Document	Sheet
				1 / 1

Con. Unit	Scale	Order No.
	NTS	

thyssenkrupp

	Date	Name
Drawn	24/11/15	RDK
Prepared	24/11/15	ANK
Checked	24/11/15	RPM
Approved	24/11/15	RPM

Description

INSTALLATION STANDARDS – EARTHING
EARTH PIT WITH DEEP ROD ELECTRODE
FOR UNPAVED AREA (EEP2)

ISO A4

UH_BO_ISO_A4_P_E_tktSIndia.dwg / AG03_UH_BO_ISO_A4_P.dwg / 14.12.2016

© thyssenkrupp Industrial Solutions (India) Private Limited 2017. All rights reserved

ITEM	DESCRIPTION	MATERIAL	QTY.	SUPPLY BY	INSTALLATION BY
1	EARTHING PLATE-600(L)X600(W)X6.3(T), WITH 40 DIA HOLE AT CENTRE.	HDGI	1 NO	ELECTRICAL CONTRACTOR	ELECTRICAL CONTRACTOR
2	EARTHING STRIP-50(W)X12(T), WITH 12 DIA HOLES.	HDGI	AS REQUIRED	ELECTRICAL CONTRACTOR	ELECTRICAL CONTRACTOR
3	PIPE - 50 DIA N.B., CLASS-B, TAPERED AT ONE END, WITH 12 DIA THROUGH HOLES AT EVERY 75mm.	HDGI	AS REQUIRED	ELECTRICAL CONTRACTOR	ELECTRICAL CONTRACTOR
4	TEST LINK ASSEMBLY-50(W)X12(T), STRIP, BENT TO SHAPE OF ITEM-1, WITH 4 NOs 12 DIA HOLES AND ANOTHER STRIP WITH 6NOs 12 DIA HOLES(REFER DETAIL-1)	HDGI	1 SET	ELECTRICAL CONTRACTOR	ELECTRICAL CONTRACTOR
5	FUNNEL, WITH WIRE MESH-SUITABLE FOR TACK WELDED TO TIP OF ITEM-3.	HDGI	1 NO	ELECTRICAL CONTRACTOR	ELECTRICAL CONTRACTOR
6	CLAMPS-25(W)X3(T) STRIP BENT TO SHAPE OF ITEM-3, WITH 2 NOs 12 DIA HOLES.	HDGI	4 NOs	ELECTRICAL CONTRACTOR	ELECTRICAL CONTRACTOR
7	CLAMPS-25(W)X3(T) STRIP BENT TO SHAPE OF ITEM-3, WITH 2 NOs 10 DIA HOLES.	HDGI	2 NOs	ELECTRICAL CONTRACTOR	ELECTRICAL CONTRACTOR
8	12 DIA HEXAGONAL HEAD BOLTS-60mm LONG, WITH NUTS & WASHERS, SUITABLE FOR CONNECTIONS SHOWN IN THIS DRAWING (REFER DETAIL-6)	GI	16 SETS	ELECTRICAL CONTRACTOR	ELECTRICAL CONTRACTOR
9	10 DIA HEXAGONAL HEAD BOLTS-40mm LONG WITH NUTS & WASHERS, SUITABLE FOR CONNECTIONS SHOWN IN THIS DRAWING (REFER DETAIL-6)	GI	4 SETS	ELECTRICAL CONTRACTOR	ELECTRICAL CONTRACTOR
10	PIPE SLEEVE-150 DIA, FOR ENTRY OF EARTHING CONDUCTOR (REFER DETAIL-2)	PVC	0.8 MTRS	*CIVIL/ELECTRICAL CONTRACTOR	*CIVIL/ELECTRICAL CONTRACTOR
11	EARTH PIT CHAMBER (TYPE B) FOR DETAIL REFER CIVIL STANDARD DRG.NO. PIN-LEP-CVC-1013.	REINFORCED CONCERETE	1 NO	*CIVIL/ELECTRICAL CONTRACTOR	*CIVIL/ELECTRICAL CONTRACTOR
12	EARTH PIT COVER (TYPE B) FOR DETAIL REFER CIVIL STANDARD DRG.NO. PIN-LEP-CVC-1013.	REINFORCED CONCERETE	1 NO	*CIVIL/ELECTRICAL CONTRACTOR	*CIVIL/ELECTRICAL CONTRACTOR
13	CHARCOAL AND SALT	-	1 LOT	ELECTRICAL CONTRACTOR	ELECTRICAL CONTRACTOR

* CIVIL/ELECTRICAL SCOPE SHALL BE DECIDED PROJECT SPECIFIC

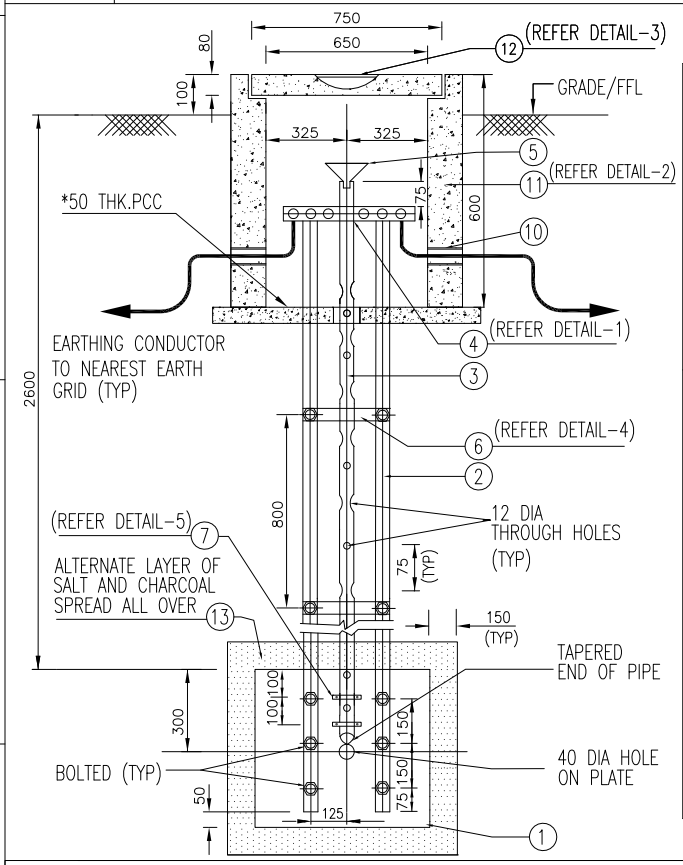

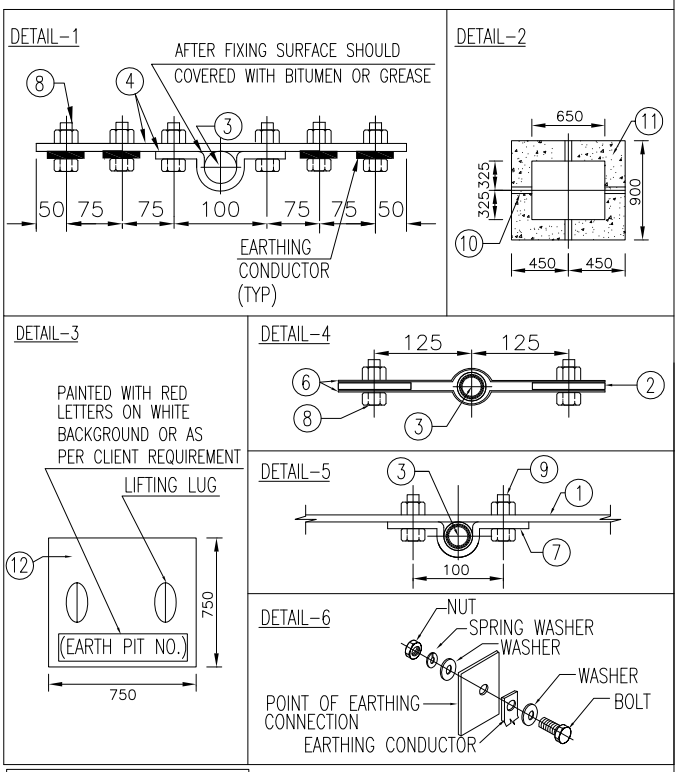

DRAWING NOT TO SCALE

Code	Contract No.	Document ID	Part	Rev.
		PIN-LEP-ELT-4002		00

Rev.	Date	Name (Drawn/Prepared)	Date	Name (Checked)	Date	Name (Approved)	Description	Acc. Code	Cat. Code	Acc. Code	Status
00	24/11/15	RDK	ANK	24/11/15	RPM	24/11/15	RPM	ISSUED AS STANDARD			

BAR-Code

Store Location: Server/Share

Store Location: Folder

Store Name: EEP3

Pro. Unit	TON	Group	Type of Document	Sheet
				1 / 1

Con. Unit	Scale	Order No.
	NTS	

thyssenkrupp

	Date	Name
Drawn	24/11/15	RDK
Prepared	24/11/15	ANK
Checked	24/11/15	RPM
Approved	24/11/15	RPM

Description

INSTALLATION STANDARDS - EARTHING EARTH PIT WITH HDGI PLATE ELECTRODE FOR UNPAVED AREA (EEP3)

ISO A4

UH_BO_ISO_A4_P_E_tkISIndia.dwg / AG03_UH_BO_ISO_A4_P.dwg / 14.12.2016

© thyssenkrupp Industrial Solutions (India) Private Limited 2017. All rights reserved

ITEM	DESCRIPTION	MATERIAL	QTY.	SUPPLY BY	INSTALLATION BY
1	EARTHING PLATE-1200(L)X1200(W)X12(T), WITH 40 DIA HOLE AT CENTRE.	CAST IRON	1 NO	ELECTRICAL CONTRACTOR	ELECTRICAL CONTRACTOR
2	EARTHING STRIP-50(W)X12(T), WITH 12 DIA HOLES.	HDGI	AS REQUIRED	ELECTRICAL CONTRACTOR	ELECTRICAL CONTRACTOR
3	PIPE - 50 DIA N.B., CLASS-B, TAPERED AT ONE END, WITH 12 DIA THROUGH HOLES AT EVERY 75mm.	HDGI	AS REQUIRED	ELECTRICAL CONTRACTOR	ELECTRICAL CONTRACTOR
4	TEST LINK ASSEMBLY-50(W)X12(T), STRIP, BENT TO SHAPE OF ITEM-1, WITH 4 NOs 12 DIA HOLES AND ANOTHER STRIP WITH 6NOs 12 DIA HOLES(REFER DETAIL-1)	HDGI	1 SET	ELECTRICAL CONTRACTOR	ELECTRICAL CONTRACTOR
5	FUNNEL, WITH WIRE MESH-SUITABLE FOR TACK WELDED TO TIP OF ITEM-3.	HDGI	1 NO	ELECTRICAL CONTRACTOR	ELECTRICAL CONTRACTOR
6	CLAMPS-25(W)X3(T) STRIP BENT TO SHAPE OF ITEM-3, WITH 2 NOs 12 DIA HOLES.	HDGI	4 NOs	ELECTRICAL CONTRACTOR	ELECTRICAL CONTRACTOR
7	CLAMPS-25(W)X3(T) STRIP BENT TO SHAPE OF ITEM-3, WITH 2 NOs 10 DIA HOLES.	HDGI	2 NOs	ELECTRICAL CONTRACTOR	ELECTRICAL CONTRACTOR
8	12 DIA HEXAGONAL HEAD BOLTS-60mm LONG, WITH NUTS & WASHERS, SUITABLE FOR CONNECTIONS SHOWN IN THIS DRAWING (REFER DETAIL-6)	GI	20 SETS	ELECTRICAL CONTRACTOR	ELECTRICAL CONTRACTOR
9	10 DIA HEXAGONAL HEAD BOLTS-40mm LONG WITH NUTS & WASHERS, SUITABLE FOR CONNECTIONS SHOWN IN THIS DRAWING (REFER DETAIL-6)	GI	4 SETS	ELECTRICAL CONTRACTOR	ELECTRICAL CONTRACTOR
10	PIPE SLEEVE-150 DIA, FOR ENTRY OF EARTHING CONDUCTOR (REFER DETAIL-2)	PVC	0.8 MTRS	*CIVIL/ELECTRICAL CONTRACTOR	*CIVIL/ELECTRICAL CONTRACTOR
11	EARTH PIT CHAMBER (TYPE B) FOR DETAIL REFER CIVIL STANDARD DRG.NO. PIN-LEP-CVC-1013.	REINFORCED CONCERETE	1 NO	*CIVIL/ELECTRICAL CONTRACTOR	*CIVIL/ELECTRICAL CONTRACTOR
12	EARTH PIT COVER (TYPE B) FOR DETAIL REFER CIVIL STANDARD DRG.NO. PIN-LEP-CVC-1013.	REINFORCED CONCERETE	1 NO	*CIVIL/ELECTRICAL CONTRACTOR	*CIVIL/ELECTRICAL CONTRACTOR
13	CHARCOAL AND SALT	-	1 LOT	ELECTRICAL CONTRACTOR	ELECTRICAL CONTRACTOR

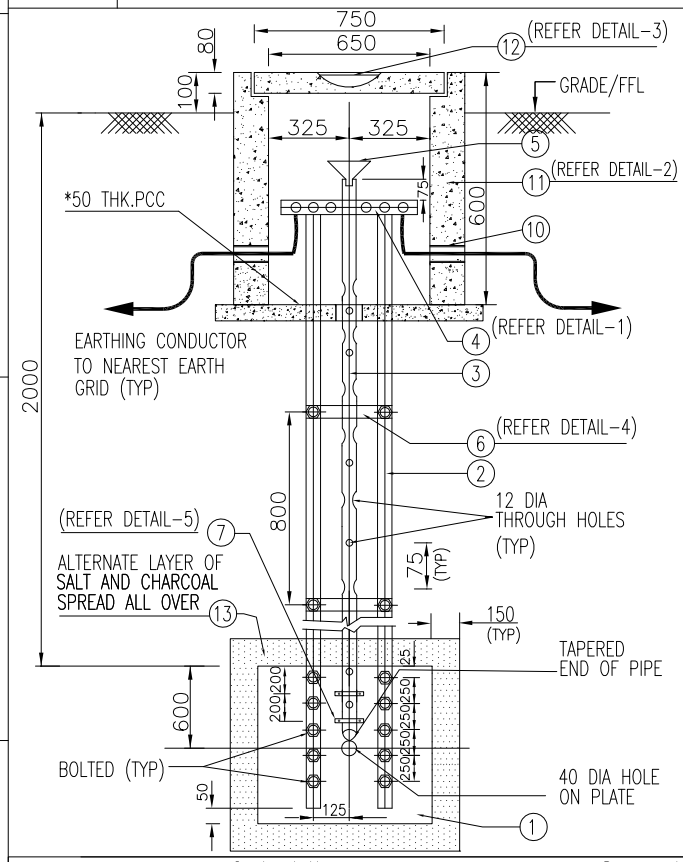

* CIVIL/ELECTRICAL SCOPE SHALL BE DECIDED PROJECT SPECIFIC

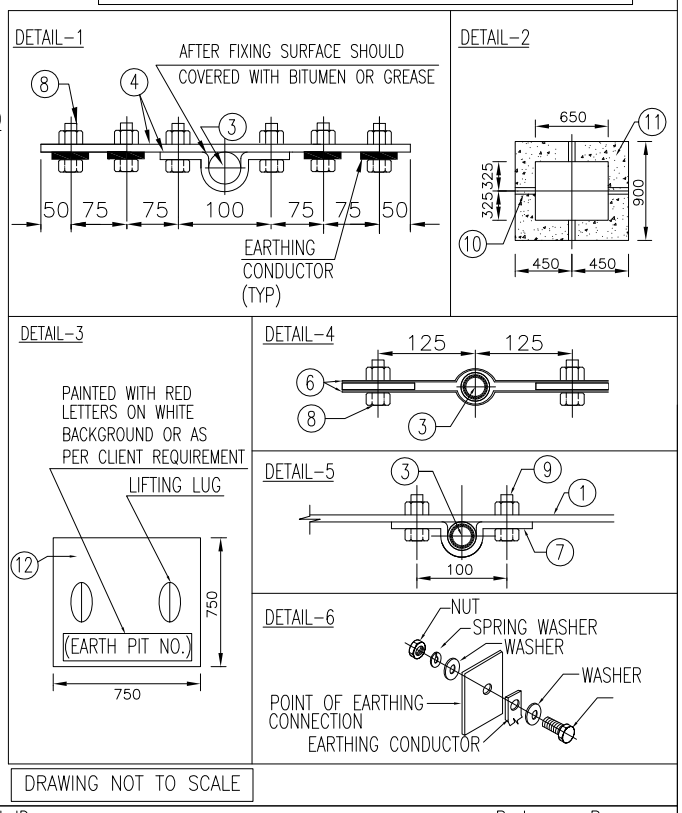

DRAWING NOT TO SCALE

Code	Contract No.	Document ID	Part	Rev.
		PIN-LEP-ELT-4002		00

Rev.	Date	Name (Drawn/Prepared)		Date	Name (Checked)		Date	Name (Approved)	Description	Acc. Code	Cat. Code	Acc. Code	Status
00	24/11/15	RDK	ANK	24/11/15	RPM		24/11/15	RPM	ISSUED AS STANDARD				

BAR-Code

Store Location: Server/Share

Store Location: Folder

Store Name: EEP4

Pro. Unit	TON	Group	Type of Document	Sheet
				1 / 1

Con. Unit	Scale	Order No.
	NTS	

thyssenkrupp

	Date	Name
Drawn	24/11/15	RDK
Prepared	24/11/15	ANK
Checked	24/11/15	RPM
Approved	24/11/15	RPM

Description

INSTALLATION STANDARDS - EARTHING EARTH PIT WITH C.I. PLATE ELECTRODE FOR UNPAVED AREA (EEP4)

ISO A4

UH_BO_ISO_A4_P_E_tkiSIndia.dwg / AG03_UH_BO_ISO_A4_P.dwg / 14.12.2016

© thyssenkrupp Industrial Solutions (India) Private Limited 2017. All rights reserved

ITEM	DESCRIPTION	MATERIAL	QTY.	SUPPLY BY	INSTALLATION BY
1	EARTHING PIPE – 3500mm LONG,100 DIA , 13mm THICK TAPERED AT ONE END, WITH 12 DIA THROUGH HOLES AT EVERY 75mm.	CAST IRON	1 NO.	ELECTRICAL CONTRACTOR	ELECTRICAL CONTRACTOR
2	TEST LINK ASSEMBLY–50(W)X6(T), STRIP, BENT TO SHAPE OF ITEM–1, WITH 4 NOs 12 DIA HOLES AND ANOTHER STRIP WITH 6NOs 12 DIA HOLES(REFER DETAIL–1)	HDGI	1 SET	ELECTRICAL CONTRACTOR	ELECTRICAL CONTRACTOR
3	FUNNEL, WITH WIRE MESH–SUITABLE FOR TACK WELDED TO TIP OF ITEM–1.	HDGI	1 NO.	ELECTRICAL CONTRACTOR	ELECTRICAL CONTRACTOR
4	10 DIA HEXAGONAL HEAD BOLTS–60mm LONG, WITH NUTS,SPRING & PLAIN WASHERS, SUITABLE FOR CONNECTIONS SHOWN IN THIS DRAWING (REFER DETAIL–4)	GI	6 SETS	ELECTRICAL CONTRACTOR	ELECTRICAL CONTRACTOR
5	PIPE SLEEVE–150 DIA, FOR ENTRY OF EARTHING CONDUCTOR (REFER DETAIL–2)	PVC	0.8MTRS	*CIVIL/ELECTRICAL CONTRACTOR	*CIVIL/ELECTRICAL CONTRACTOR
6	EARTH PIT CHAMBER (TYPE B) REFER NOTE–3	REINFORCED CONCERETE	1 NO.	*CIVIL/ELECTRICAL CONTRACTOR	*CIVIL/ELECTRICAL CONTRACTOR
7	EARTH PIT COVER (TYPE B) REFER NOTE–3	REINFORCED CONCERETE	1 NO.	*CIVIL/ELECTRICAL CONTRACTOR	*CIVIL/ELECTRICAL CONTRACTOR
8	CHARCOAL, SALT & SAND	–	1 LOT	ELECTRICAL CONTRACTOR	ELECTRICAL CONTRACTOR

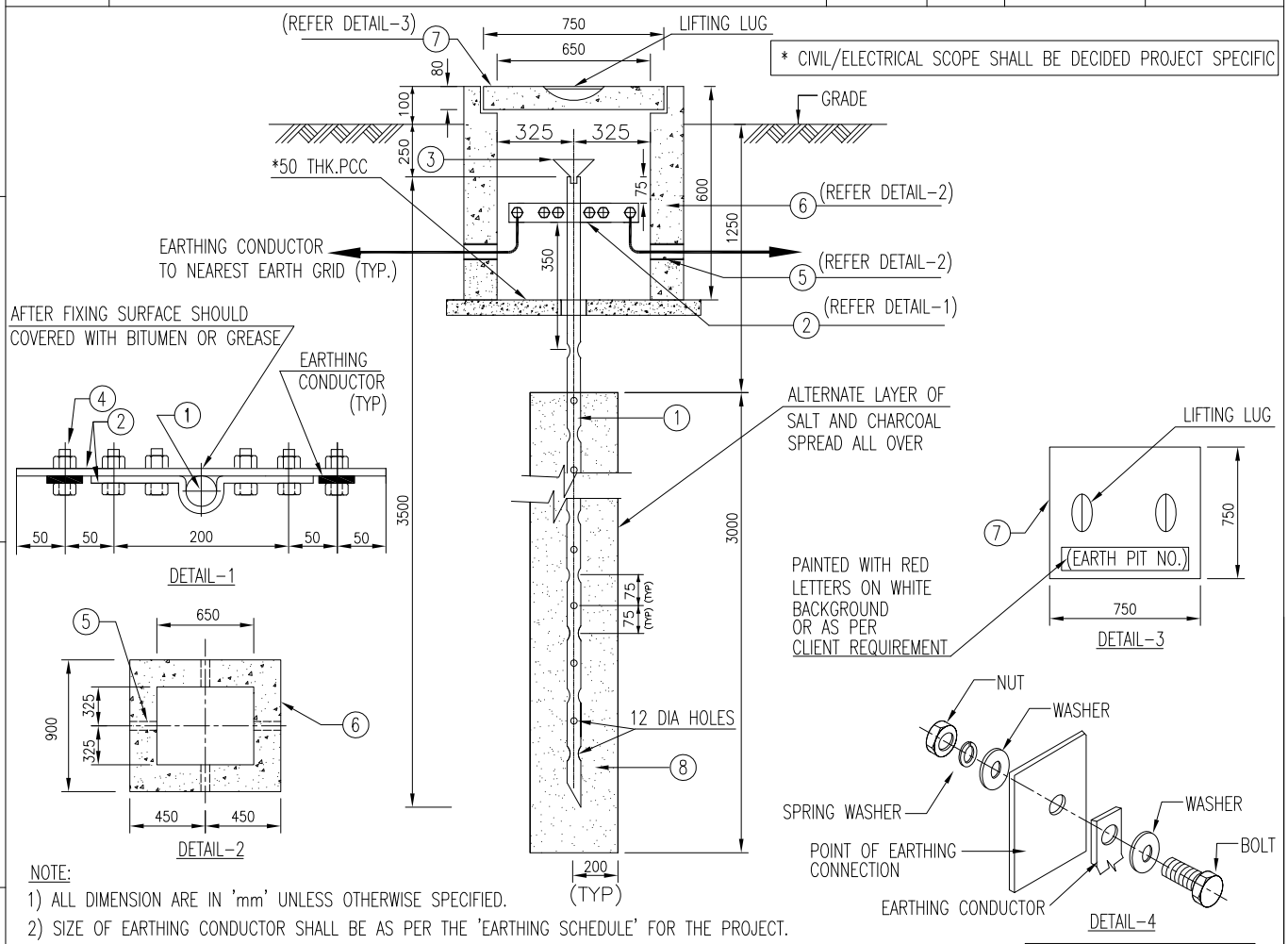

* CIVIL/ELECTRICAL SCOPE SHALL BE DECIDED PROJECT SPECIFIC

NOTE:

1) ALL DIMENSION ARE IN 'mm' UNLESS OTHERWISE SPECIFIED.
2) SIZE OF EARTHING CONDUCTOR SHALL BE AS PER THE 'EARTHING SCHEDULE' FOR THE PROJECT.
3) FOR EARTHING PIT CHAMBER & EARTH PIT COVER DETAIL REFER CIVIL STANDARD DRG.NO. PIN–LEP–CVC–1013.

DRAWING NOT TO SCALE

Code	Contract No.	Document ID	Part	Rev.
		PIN–LEP–ELT–4002		00

Rev.	Date	Name (Drawn/Prepared)	Date	Name (Checked)	Date	Name (Approved)	Description	Acc. Code	Cat. Code	Acc. Code	Status
00	24/11/15	RDK	24/11/15	RPM	24/11/15	RPM	ISSUED AS STANDARD				

BAR–Code

Store Location: Server/Share

Store Location: Folder

Store Name: EEP5

Pro. Unit	TON	Group	Type of Document	Sheet
				1 / 1

Con. Unit	Scale	Order No.
	NTS	

thyssenkrupp

	Date	Name
Drawn	24/11/15	RDK
Prepared	24/11/15	ANK
Checked	24/11/15	RPM
Approved	24/11/15	RPM

Description

INSTALLATION STANDARDS – EARTHING EARTH PIT WITH CI PIPE ELECTRODE FOR UNPAVED AREA (EEP5)

ISO A4

UH_BO_ISO_A4_P_E_tktSIndia.dwg / AG03_UH_BO_ISO_A4_P.dwg / 14.12.2016

© thyssenkrupp Industrial Solutions (India) Private Limited 2017. All rights reserved

ITEM	DESCRIPTION	MATERIAL	QTY.	SUPPLY BY	INSTALLATION BY
1	EARTHING PIPE – 3500mm LONG,50 DIA N.B., CLASS-B, TAPERED AT ONE END, WITH 12 DIA THROUGH HOLES AT EVERY 75mm.	HDGI	1 NO.	ELECTRICAL CONTRACTOR	ELECTRICAL CONTRACTOR
2	TEST LINK ASSEMBLY-50(W)X6(T), STRIP, BENT TO SHAPE OF ITEM-1, WITH 4 NOs 12 DIA HOLES AND ANOTHER STRIP WITH 6NOs 12 DIA HOLES(REFER DETAIL-1)	HDGI	1 SET	ELECTRICAL CONTRACTOR	ELECTRICAL CONTRACTOR
3	FUNNEL, WITH WIRE MESH-SUITABLE FOR TACK WELDED TO TIP OF ITEM-1.	HDGI	1 NO.	ELECTRICAL CONTRACTOR	ELECTRICAL CONTRACTOR
4	10 DIA HEXAGONAL HEAD BOLTS-60mm LONG, WITH NUTS,SPRING & PLAIN WASHERS, SUITABLE FOR CONNECTIONS SHOWN IN THIS DRAWING (REFER DETAIL-4)	GI	6 SETS	ELECTRICAL CONTRACTOR	ELECTRICAL CONTRACTOR
5	PIPE SLEEVE-150 DIA, FOR ENTRY OF EARTHING CONDUCTOR (REFER DETAIL-2)	PVC	0.8MTRS	*CIVIL/ELECTRICAL CONTRACTOR	*CIVIL/ELECTRICAL CONTRACTOR
6	EARTH PIT CHAMBER (TYPE A) REFER NOTE-3	REINFORCED CONCERETE	1 NO.	*CIVIL/ELECTRICAL CONTRACTOR	*CIVIL/ELECTRICAL CONTRACTOR
7	EARTH PIT COVER (TYPE A) REFER NOTE-3	REINFORCED CONCERETE	1 NO.	*CIVIL/ELECTRICAL CONTRACTOR	*CIVIL/ELECTRICAL CONTRACTOR
8	CHARCOAL, SALT & SAND	–	1 LOT	ELECTRICAL CONTRACTOR	ELECTRICAL CONTRACTOR

* CIVIL/ELECTRICAL SCOPE SHALL BE DECIDED PROJECT SPECIFIC

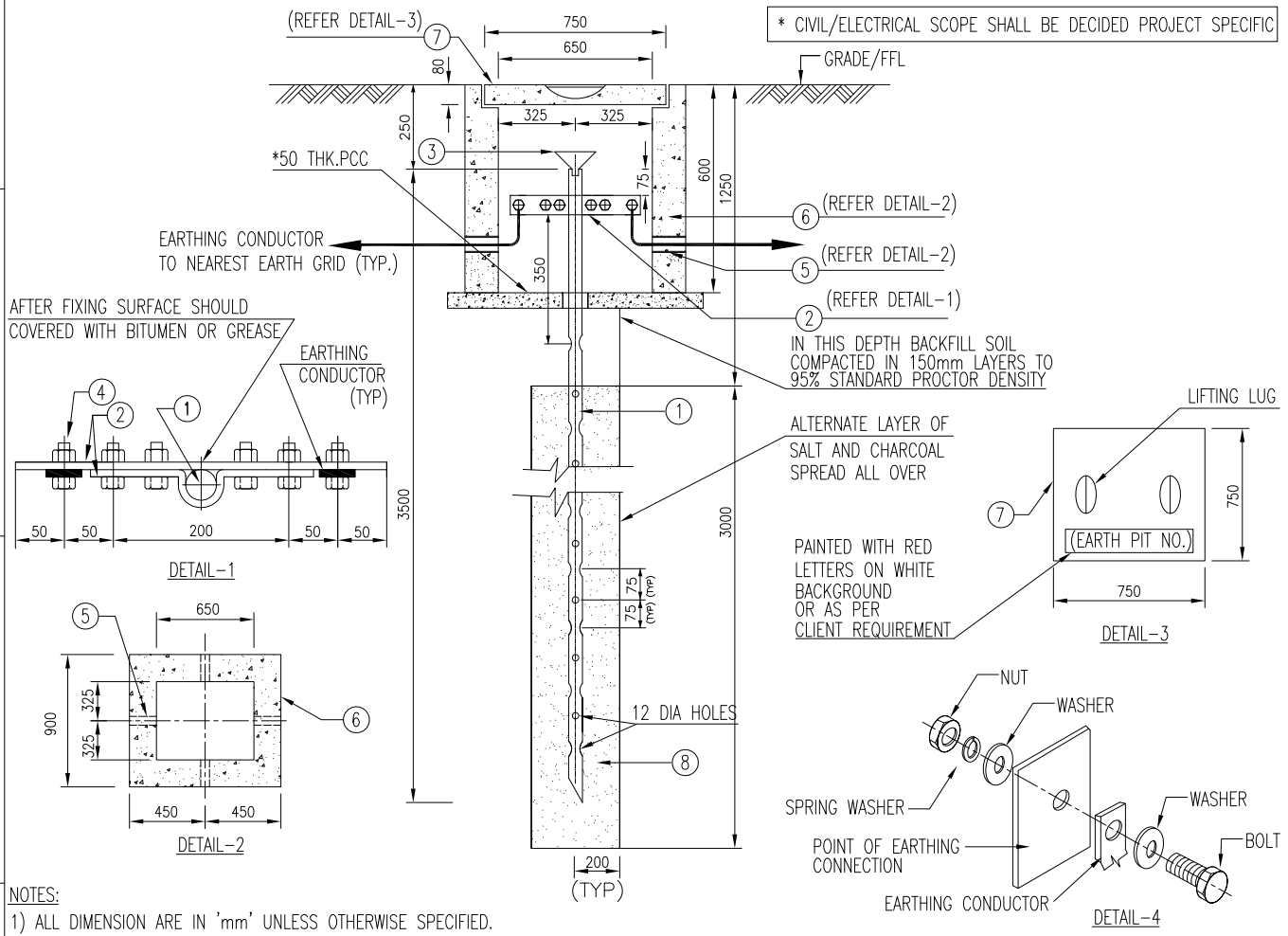

NOTES:

1) ALL DIMENSION ARE IN 'mm' UNLESS OTHERWISE SPECIFIED.
2) SIZE OF EARTHING CONDUCTOR SHALL BE AS PER THE 'EARTHING SCHEDULE' FOR THE PROJECT.
3) FOR EARTHING PIT CHAMBER & EARTH PIT COVER DETAIL REFER CIVIL STANDARD DRG.NO. PIN-LEP-CVC-1013.

DRAWING NOT TO SCALE

Code	Contract No.	Document ID	Part	Rev.
		PIN-LEP-ELT-4002		00

Rev.	Date	Name (Drawn/Prepared)	Date	Name (Checked)	Date	Name (Approved)	Description	Acc. Code	Cat. Code	Acc. Code	Status
00	24/11/15	RDK	24/11/15	RPM	24/11/15	RPM	ISSUED AS STANDARD				

BAR-Code

Store Location: Server/Share

Store Location: Folder

Store Name
EEP6

Pro. Unit	TON	Group	Type of Document	Sheet
				1 / 1

Con. Unit	Scale	Order No.
	NTS	

thyssenkrupp

	Date	Name
Drawn	24/11/15	RDK
Prepared	24/11/15	ANK
Checked	24/11/15	RPM
Approved	24/11/15	RPM

Description
INSTALLATION STANDARDS – EARTHING
EARTH PIT WITH GI PIPE ELECTRODE
FOR PAVED AREA
WITHOUT FORKLIFT MOVEMENT (EEP6)

ISO A4

UH_BO_ISO_A4_P_E_tktSIndia.dwg / AG03_UH_BO_ISO_A4_P.dwg / 14.12.2016

© thyssenkrupp Industrial Solutions (India) Private Limited 2017. All rights reserved

ITEM	DESCRIPTION	MATERIAL	QTY.	SUPPLY BY	INSTALLATION BY
1	EARTHING ROD, 19 DIA, 3500mm LONG	COPPER COATED STEEL	1NO.	ELECTRICAL CONTRACTOR	ELECTRICAL CONTRACTOR
2	TEST LINK ASSEMBLY-50(W)X6(T), STRIP, BENT TO SHAPE OF ITEM-1, WITH 4 NOs 12 DIA HOLES AND ANOTHER STRIP WITH 6NOs 12 DIA HOLES(REFER DETAIL-1)	COPPER COATED STEEL	1 SET	ELECTRICAL CONTRACTOR	ELECTRICAL CONTRACTOR
3	10 DIA HEXAGONAL HEAD BOLTS-60mm LONG, WITH NUTS,SPRING & PLAIN WASHERS, SUITABLE FOR CONNECTIONS SHOWN IN THIS DRAWING (REFER DETAIL-4)	SS304	6 SETS	ELECTRICAL CONTRACTOR	ELECTRICAL CONTRACTOR
4	PIPE SLEEVE-150 DIA, FOR ENTRY OF EARTHING CONDUCTOR (REFER DETAIL-2)	PVC	0.8MTRS	*CIVIL/ELECTRICAL CONTRACTOR	*CIVIL/ELECTRICAL CONTRACTOR
5	EARTH PIT CHAMBER (TYPE A) REFER NOTE-3	REINFORCED CONCERETE	1NO.	*CIVIL/ELECTRICAL CONTRACTOR	*CIVIL/ELECTRICAL CONTRACTOR
6	EARTH PIT COVER (TYPE A) REFER NOTE-3	REINFORCED CONCERETE	1NO.	*CIVIL/ELECTRICAL CONTRACTOR	*CIVIL/ELECTRICAL CONTRACTOR

* CIVIL/ELECTRICAL SCOPE SHALL BE DECIDED PROJECT SPECIFIC

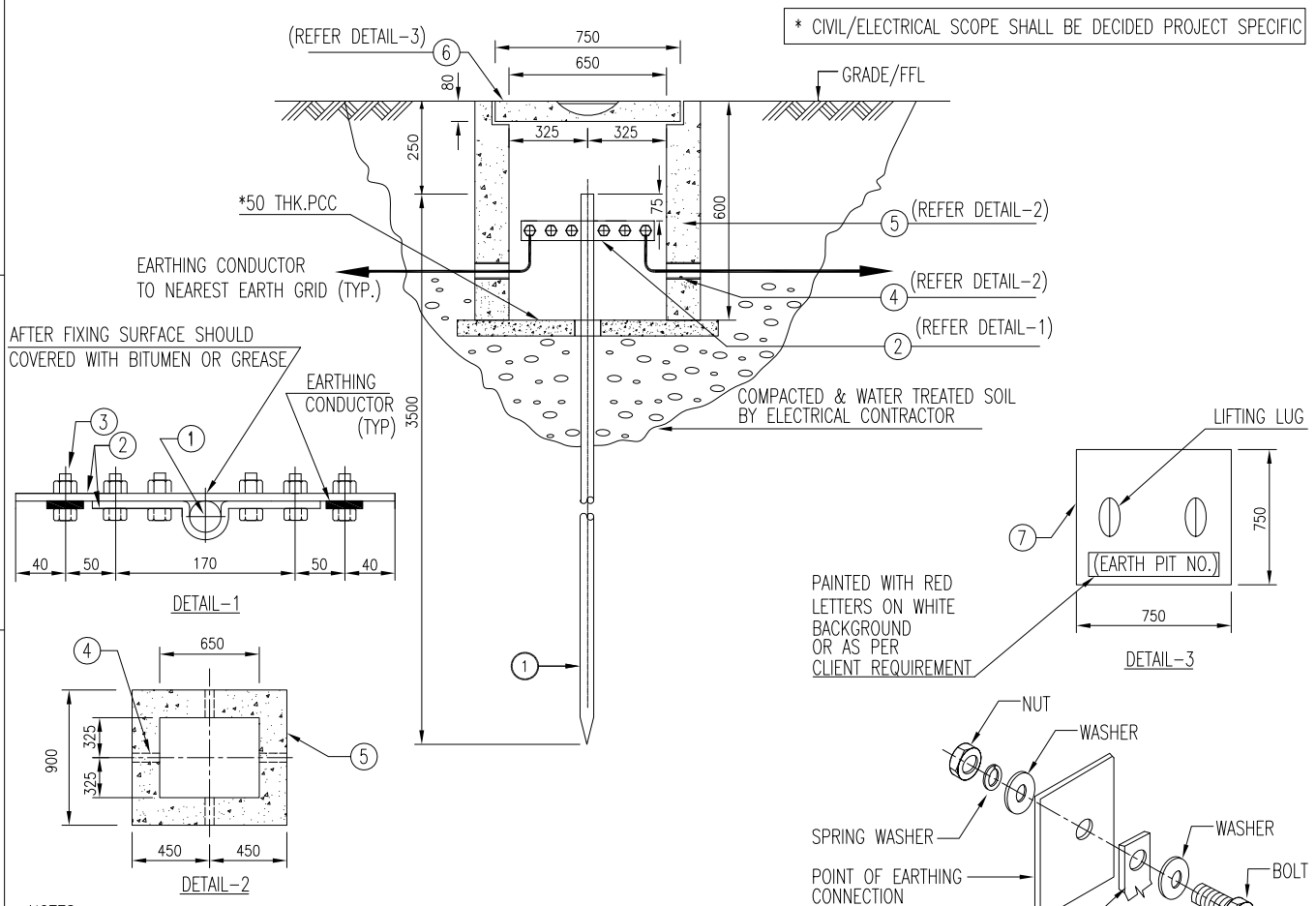

NOTES

1) ALL DIMENSION ARE IN 'mm' UNLESS OTHERWISE SPECIFIED.
2) SIZE OF EARTHING CONDUCTOR SHALL BE AS PER THE 'EARTHING SCHEDULE' FOR THE PROJECT.
3) IN GENERAL THE TOTAL LENGTH OF THE ROD ELECTRODE SHALL BE 3.5MTRS. IF ELECTRODES ARE TO BE DRIVEN DEEPER THAN 3.5MTRS, THIS REQUIREMENT SHALL BE SPECIFICALLY MENTIONED IN THE 'EARTHING LAYOUT' FOR THE PROJECT & THE SAME SHALL BE FOLLOWED DURING INSTALLATION.
4) FOR EARTHING PIT CHAMBER & EARTH PIT COVER DETAIL REFER CIVIL STANDARD DRG.NO. PIN-LEP-CVC-1013.

DRAWING NOT TO SCALE

Code	Contract No.	Document ID	Part	Rev.
		PIN-LEP-ELT-4002		00

Rev.	Date	Name (Drawn/Prepared)	Date	Name (Checked)	Date	Name (Approved)	Description	Acc. Code	Cat. Code	Acc. Code	Status
00	24/11/15	RDK	24/11/15	RPM	24/11/15	RPM	ISSUED AS STANDARD				

BAR-Code

Store Location: Server/Share

Store Location: Folder

Store Name
EEP7

Pro. Unit	TON	Group	Type of Document	Sheet
				1 / 1

Con. Unit	Scale	Order No.
	NTS	

thyssenkrupp

	Date	Name
Drawn	24/11/15	RDK
Prepared	24/11/15	ANK
Checked	24/11/15	RPM
Approved	24/11/15	RPM

Description
INSTALLATION STANDARDS – EARTHING
EARTH PIT WITH DEEP ROD ELECTRODE
FOR PAVED AREA
WITHOUT FORKLIFT MOVEMENT (EEP7)

ISO A4

© thyssenkrupp Industrial Solutions (India) Private Limited 2017. All rights reserved

UH_BO_ISO_A4_P_E_tktSIndia.dwg / AG03_UH_BO_ISO_A4_P.dwg / 14.12.2016

ITEM	DESCRIPTION	MATERIAL	QTY.	SUPPLY BY	INSTALLATION BY
1	EARTHING PLATE-600(L)X600(W)X6.3(T), WITH 40 DIA HOLE AT CENTRE.	HDGI	1 NO	ELECTRICAL CONTRACTOR	ELECTRICAL CONTRACTOR
2	EARTHING STRIP-50(W)X12(T), WITH 12 DIA HOLES.	HDGI	AS REQUIRED	ELECTRICAL CONTRACTOR	ELECTRICAL CONTRACTOR
3	PIPE - 50 DIA N.B., CLASS-B, TAPERED AT ONE END, WITH 12 DIA THROUGH HOLES AT EVERY 75mm.	HDGI	AS REQUIRED	ELECTRICAL CONTRACTOR	ELECTRICAL CONTRACTOR
4	TEST LINK ASSEMBLY-50(W)X12(T), STRIP, BENT TO SHAPE OF ITEM-1, WITH 4 NOs 12 DIA HOLES AND ANOTHER STRIP WITH 6NOs 12 DIA HOLES(REFER DETAIL-1)	HDGI	1 SET	ELECTRICAL CONTRACTOR	ELECTRICAL CONTRACTOR
5	FUNNEL, WITH WIRE MESH-SUITABLE FOR TACK WELDED TO TIP OF ITEM-3.	HDGI	1 NO	ELECTRICAL CONTRACTOR	ELECTRICAL CONTRACTOR
6	CLAMPS-25(W)X3(T) STRIP BENT TO SHAPE OF ITEM-3, WITH 2 NOs 12 DIA HOLES.	HDGI	4 NOs	ELECTRICAL CONTRACTOR	ELECTRICAL CONTRACTOR
7	CLAMPS-25(W)X3(T) STRIP BENT TO SHAPE OF ITEM-3, WITH 2 NOs 10 DIA HOLES.	HDGI	2 NOs	ELECTRICAL CONTRACTOR	ELECTRICAL CONTRACTOR
8	12 DIA HEXAGONAL HEAD BOLTS-60mm LONG, WITH NUTS & WASHERS, SUITABLE FOR CONNECTIONS SHOWN IN THIS DRAWING (REFER DETAIL-6)	GI	16 SETS	ELECTRICAL CONTRACTOR	ELECTRICAL CONTRACTOR
9	10 DIA HEXAGONAL HEAD BOLTS-40mm LONG WITH NUTS & WASHERS, SUITABLE FOR CONNECTIONS SHOWN IN THIS DRAWING (REFER DETAIL-6)	GI	4 SETS	ELECTRICAL CONTRACTOR	ELECTRICAL CONTRACTOR
10	PIPE SLEEVE-150 DIA, FOR ENTRY OF EARTHING CONDUCTOR (REFER DETAIL-2)	PVC	0.8 MTRS	*CIVIL/ELECTRICAL CONTRACTOR	*CIVIL/ELECTRICAL CONTRACTOR
11	EARTH PIT CHAMBER (TYPE A) FOR DETAIL REFER CIVIL STANDARD DRG.NO. PIN-LEP-CVC-1013.	REINFORCED CONCERETE	1 NO	*CIVIL/ELECTRICAL CONTRACTOR	*CIVIL/ELECTRICAL CONTRACTOR
12	EARTH PIT COVER (TYPE A) FOR DETAIL REFER CIVIL STANDARD DRG.NO. PIN-LEP-CVC-1013.	REINFORCED CONCERETE	1 NO	*CIVIL/ELECTRICAL CONTRACTOR	*CIVIL/ELECTRICAL CONTRACTOR
13	CHARCOAL AND SALT	-	1 LOT	ELECTRICAL CONTRACTOR	ELECTRICAL CONTRACTOR

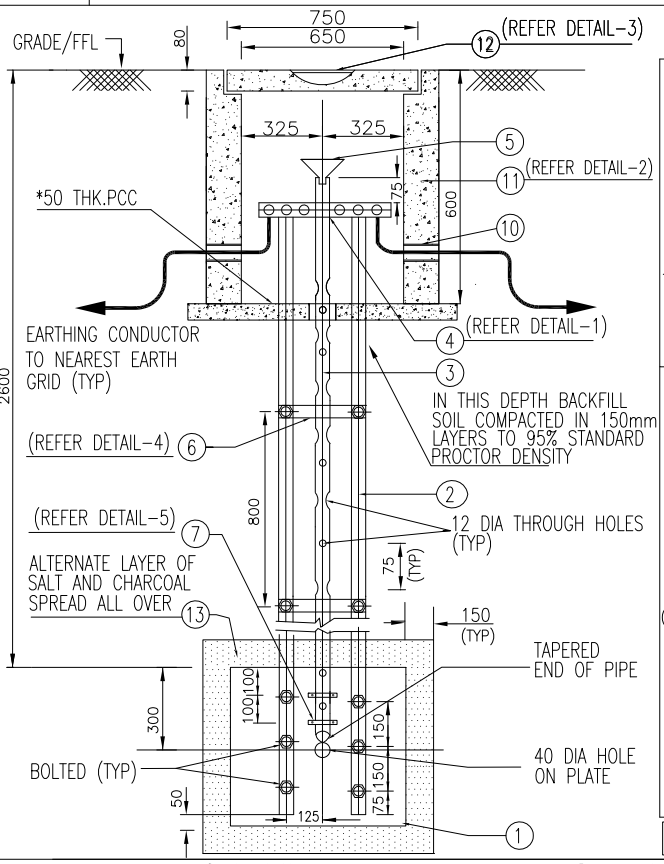

* CIVIL/ELECTRICAL SCOPE SHALL BE DECIDED PROJECT SPECIFIC

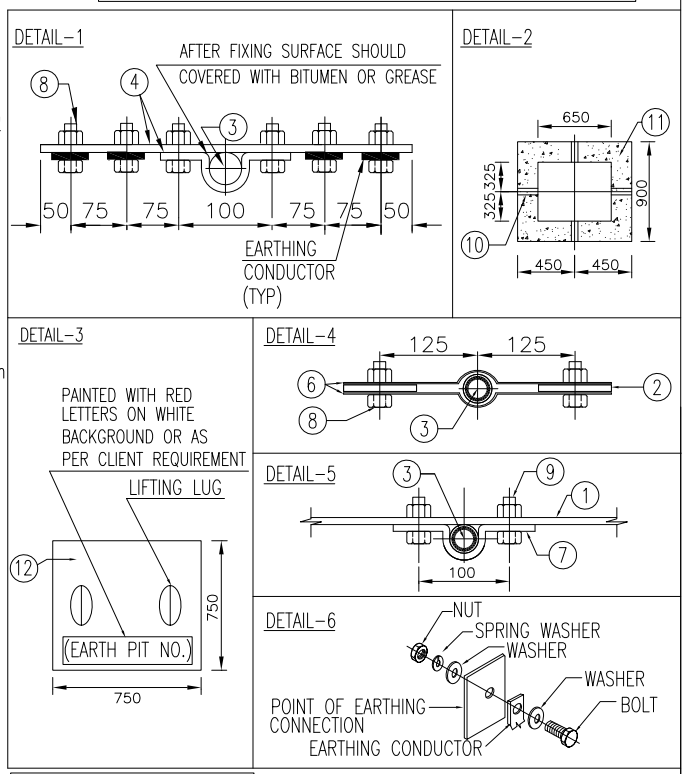

DRAWING NOT TO SCALE

Code	Contract No.	Document ID	Part	Rev.
		PIN-LEP-ELT-4002		00

Rev.	Date	Name (Drawn/Prepared)	Date	Name (Checked)	Date	Name (Approved)	Description	Acc. Code	Cat. Code	Acc. Code	Status
00	24/11/15	RDK ANK	24/11/15	RPM	24/11/15	RPM	ISSUED AS STANDARD				

BAR-Code

Store Location: Server/Share

Store Location: Folder

Store Name
EEP8

Pro. Unit	TON	Group	Type of Document	Sheet
				1 / 1

Con. Unit	Scale	Order No.
	NTS	

thyssenkrupp

	Date	Name
Drawn	24/11/15	RDK
Prepared	24/11/15	ANK
Checked	24/11/15	RPM
Approved	24/11/15	RPM

Description
INSTALLATION STANDARDS - EARTHING
EARTH PIT WITH HDGI PLATE ELECTRODE
FOR PAVED AREA
WITHOUT FORKLIFT MOVEMENT (EEP8)

ISO A4

UH_BO_ISO_A4_P_E_tktSIndia.dwg / AG03_UH_BO_ISO_A4_P.dwg / 14.12.2016

© thyssenkrupp Industrial Solutions (India) Private Limited 2017. All rights reserved

ITEM	DESCRIPTION	MATERIAL	QTY.	SUPPLY BY	INSTALLATION BY
1	EARTHING PLATE-1200(L)X1200(W)X12(T), WITH 40 DIA HOLE AT CENTRE.	CAST IRON	1 NO	ELECTRICAL CONTRACTOR	ELECTRICAL CONTRACTOR
2	EARTHING STRIP-50(W)X12(T), WITH 12 DIA HOLES.	HDGI	AS REQUIRED	ELECTRICAL CONTRACTOR	ELECTRICAL CONTRACTOR
3	PIPE - 50 DIA N.B., CLASS-B, TAPERED AT ONE END, WITH 12 DIA THROUGH HOLES AT EVERY 75mm.	HDGI	AS REQUIRED	ELECTRICAL CONTRACTOR	ELECTRICAL CONTRACTOR
4	TEST LINK ASSEMBLY-50(W)X12(T), STRIP, BENT TO SHAPE OF ITEM-1, WITH 4 NOs 12 DIA HOLES AND ANOTHER STRIP WITH 6NOs 12 DIA HOLES(REFER DETAIL-1)	HDGI	1 SET	ELECTRICAL CONTRACTOR	ELECTRICAL CONTRACTOR
5	FUNNEL, WITH WIRE MESH-SUITABLE FOR TACK WELDED TO TIP OF ITEM-3.	HDGI	1 NO	ELECTRICAL CONTRACTOR	ELECTRICAL CONTRACTOR
6	CLAMPS-25(W)X3(T) STRIP BENT TO SHAPE OF ITEM-3, WITH 2 NOs 12 DIA HOLES.	HDGI	4 NOs	ELECTRICAL CONTRACTOR	ELECTRICAL CONTRACTOR
7	CLAMPS-25(W)X3(T) STRIP BENT TO SHAPE OF ITEM-3, WITH 2 NOs 10 DIA HOLES.	HDGI	2 NOs	ELECTRICAL CONTRACTOR	ELECTRICAL CONTRACTOR
8	12 DIA HEXAGONAL HEAD BOLTS-60mm LONG, WITH NUTS & WASHERS, SUITABLE FOR CONNECTIONS SHOWN IN THIS DRAWING (REFER DETAIL-6)	GI	20 SETS	ELECTRICAL CONTRACTOR	ELECTRICAL CONTRACTOR
9	10 DIA HEXAGONAL HEAD BOLTS-40mm LONG WITH NUTS & WASHERS, SUITABLE FOR CONNECTIONS SHOWN IN THIS DRAWING (REFER DETAIL-6)	GI	4 SETS	ELECTRICAL CONTRACTOR	ELECTRICAL CONTRACTOR
10	PIPE SLEEVE-150 DIA, FOR ENTRY OF EARTHING CONDUCTOR (REFER DETAIL-2)	PVC	0.8 MTRS	*CIVIL/ELECTRICAL CONTRACTOR	*CIVIL/ELECTRICAL CONTRACTOR
11	EARTH PIT CHAMBER (TYPE A) FOR DETAIL REFER CIVIL STANDARD DRG.NO. PIN-LEP-CVC-1013.	REINFORCED CONCERETE	1 NO	*CIVIL/ELECTRICAL CONTRACTOR	*CIVIL/ELECTRICAL CONTRACTOR
12	EARTH PIT COVER (TYPE A) FOR DETAIL REFER CIVIL STANDARD DRG.NO. PIN-LEP-CVC-1013.	REINFORCED CONCERETE	1 NO	*CIVIL/ELECTRICAL CONTRACTOR	*CIVIL/ELECTRICAL CONTRACTOR
13	CHARCOAL AND SALT	-	1 LOT	ELECTRICAL CONTRACTOR	ELECTRICAL CONTRACTOR

* CIVIL/ELECTRICAL SCOPE SHALL BE DECIDED PROJECT SPECIFIC

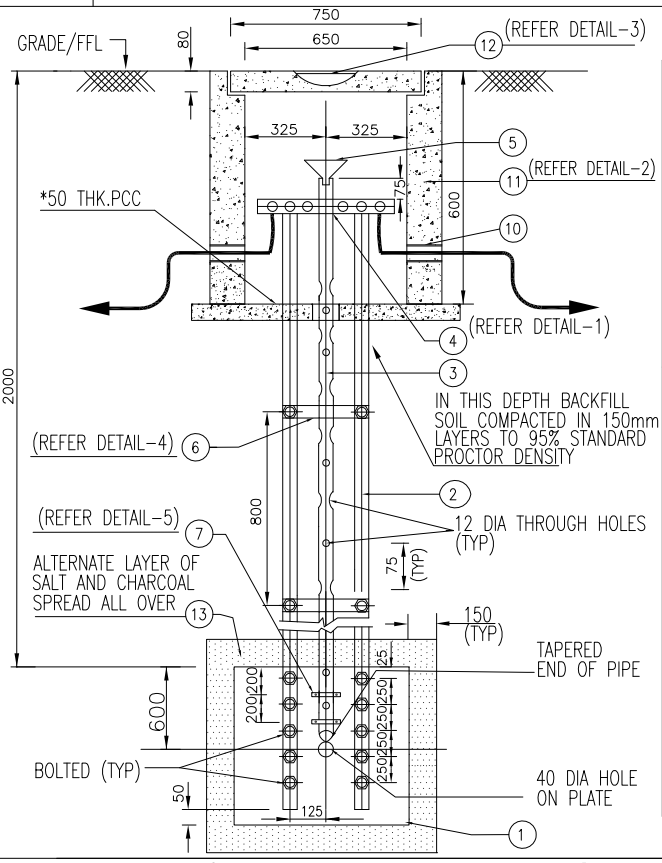

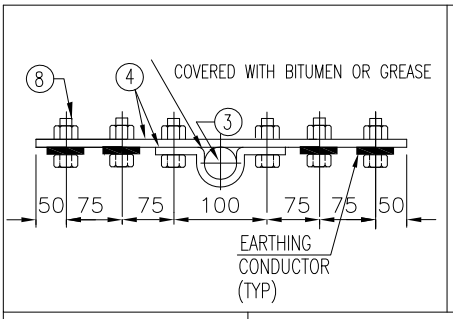

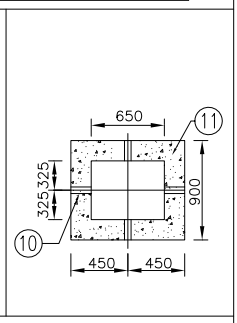

DETAIL-3

PAINTED WITH RED LETTERS ON WHITE BACKGROUND OR AS PER CLIENT REQUIREMENT

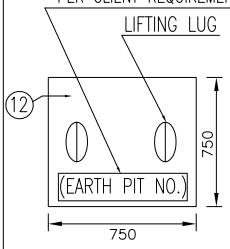

DETAIL-4

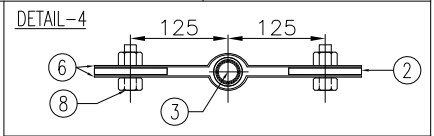

DETAIL-5

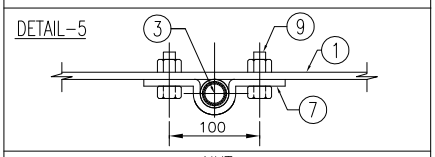

DETAIL-6

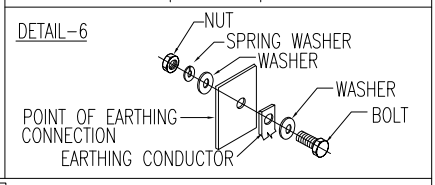

DRAWING NOT TO SCALE

Code	Contract No.	Document ID	Part	Rev.
		PIN-LEP-ELT-4002		00

Rev.	Date	Name (Drawn/Prepared)		Date	Name (Checked)		Date	Name (Approved)	Description	Acc. Code	Cat. Code	Acc. Code	Status
00	24/11/15	RDK	ANK	24/11/15	RPM		24/11/15	RPM	ISSUED AS STANDARD				

BAR-Code

Store Location: Server/Share

Store Location: Folder

Store Name
EEP9

Pro. Unit	TON	Group	Type of Document	Sheet
				1 / 1

Con. Unit	Scale	Order No.
	NTS	

thyssenkrupp

	Date	Name
Drawn	24/11/15	RDK
Prepared	24/11/15	ANK
Checked	24/11/15	RPM
Approved	24/11/15	RPM

Description
INSTALLATION STANDARDS - EARTHING
EARTH PIT WITH C.I. PLATE ELECTRODE
FOR PAVED AREA
WITHOUT FORKLIFT MOVEMENT (EEP9)

ISO A4

UH_BO_ISO_A4_P_E_tkISIndia.dwg / AG03_UH_BO_ISO_A4_P.dwg / 14.12.2016

© thyssenkrupp Industrial Solutions (India) Private Limited 2017. All rights reserved

ITEM	DESCRIPTION	MATERIAL	QTY.	SUPPLY BY	INSTALLATION BY
1	EARTHING PIPE – 3500mm LONG,100 DIA , 13mm THICK TAPERED AT ONE END, WITH 12 DIA THROUGH HOLES AT EVERY 75mm.	CAST IRON	1 NO.	ELECTRICAL CONTRACTOR	ELECTRICAL CONTRACTOR
2	TEST LINK ASSEMBLY–50(W)X6(T), STRIP, BENT TO SHAPE OF ITEM–1, WITH 4 NOs 12 DIA HOLES AND ANOTHER STRIP WITH 6NOs 12 DIA HOLES(REFER DETAIL–1)	HDGI	1 SET	ELECTRICAL CONTRACTOR	ELECTRICAL CONTRACTOR
3	FUNNEL, WITH WIRE MESH–SUITABLE FOR TACK WELDED TO TIP OF ITEM–1.	HDGI	1 NO.	ELECTRICAL CONTRACTOR	ELECTRICAL CONTRACTOR
4	10 DIA HEXAGONAL HEAD BOLTS–60mm LONG, WITH NUTS,SPRING & PLAIN WASHERS, SUITABLE FOR CONNECTIONS SHOWN IN THIS DRAWING (REFER DETAIL–4)	GI	6 SETS	ELECTRICAL CONTRACTOR	ELECTRICAL CONTRACTOR
5	PIPE SLEEVE–150 DIA, FOR ENTRY OF EARTHING CONDUCTOR (REFER DETAIL–2)	PVC	0.8MTRS	*CIVIL/ELECTRICAL CONTRACTOR	*CIVIL/ELECTRICAL CONTRACTOR
6	EARTH PIT CHAMBER (TYPE A) REFER NOTE–3	REINFORCED CONCERETE	1 NO.	*CIVIL/ELECTRICAL CONTRACTOR	*CIVIL/ELECTRICAL CONTRACTOR
7	EARTH PIT COVER (TYPE A) REFER NOTE–3	REINFORCED CONCERETE	1 NO.	*CIVIL/ELECTRICAL CONTRACTOR	*CIVIL/ELECTRICAL CONTRACTOR
8	CHARCOAL, SALT & SAND	–	1 LOT	ELECTRICAL CONTRACTOR	ELECTRICAL CONTRACTOR

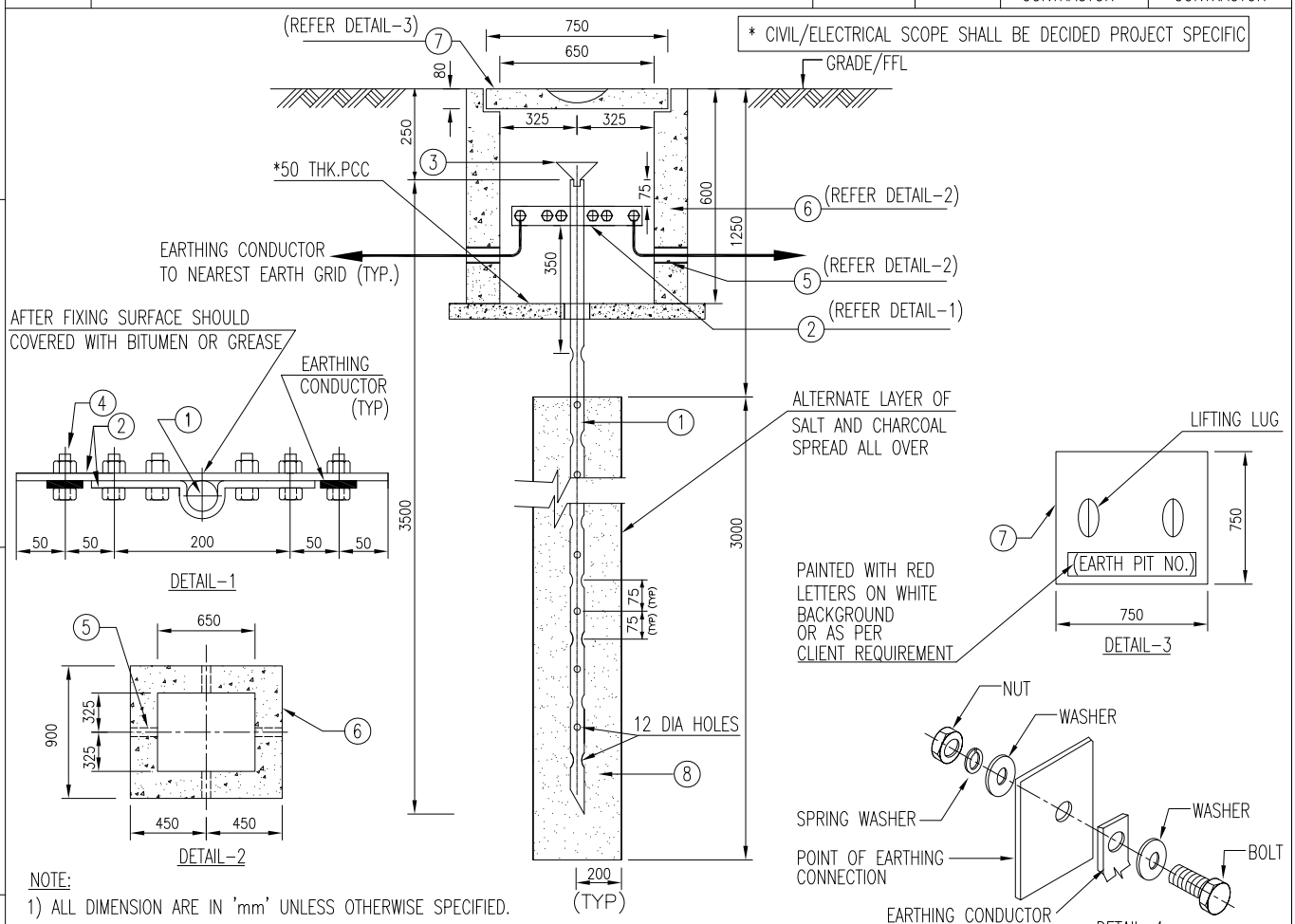

NOTE:

1) ALL DIMENSION ARE IN 'mm' UNLESS OTHERWISE SPECIFIED.
2) SIZE OF EARTHING CONDUCTOR SHALL BE AS PER THE 'EARTHING SCHEDULE' FOR THE PROJECT.
3) FOR EARTHING PIT CHAMBER & EARTH PIT COVER DETAIL REFER CIVIL STANDARD DRG.NO. PIN–LEP–CVC–1013.

DRAWING NOT TO SCALE

Code	Contract No.	Document ID	Part	Rev.
		PIN–LEP–ELT–4002		00

Rev.	Date	Name (Drawn/Prepared)	Date	Name (Checked)	Date	Name (Approved)	Description	Acc. Code	Cat. Code	Acc. Code	Status
00	24/11/15	RDK	24/11/15	ANK	24/11/15	RPM	24/11/15	RPM	ISSUED AS STANDARD		

BAR–Code

Store Location: Server/Share

Store Location: Folder

Store Name
EEP10

Pro. Unit	TON	Group	Type of Document	Sheet
				1 / 1

Con. Unit	Scale	Order No.
	NTS	

thyssenkrupp

	Date	Name
Drawn	24/11/15	RDK
Prepared	24/11/15	ANK
Checked	24/11/15	RPM
Approved	24/11/15	RPM

Description
INSTALLATION STANDARDS – EARTHING
EARTH PIT WITH CI PIPE ELECTRODE
FOR UNPAVED AREA
WITHOUT FORKLIFT MOVEMENT (EEP10)

ISO A4

UH_BO_ISO_A4_P_E_tktSIndia.dwg / AG03_UH_BO_ISO_A4_P.dwg / 14.12.2016

© thyssenkrupp Industrial Solutions (India) Private Limited 2017. All rights reserved

UH_BO_ISO_A4_P_E_tktSIndia.dwg / AG03_UH_BO_ISO_A4_P.dwg / 14.12.2016

ITEM	DESCRIPTION	MATERIAL	QTY.	SUPPLY BY	INSTALLATION BY
1	EARTHING PIPE – 3500mm LONG,50 DIA N.B., CLASS-B, TAPERED AT ONE END, WITH 12 DIA THROUGH HOLES AT EVERY 75mm.	HDGI	1 NO.	ELECTRICAL CONTRACTOR	ELECTRICAL CONTRACTOR
2	TEST LINK ASSEMBLY-50(W)X6(T), STRIP, BENT TO SHAPE OF ITEM-1, WITH 4 NOs 12 DIA HOLES AND ANOTHER STRIP WITH 6NOs 12 DIA HOLES(REFER DETAIL-1)	HDGI	1 SET	ELECTRICAL CONTRACTOR	ELECTRICAL CONTRACTOR
3	FUNNEL, WITH WIRE MESH-SUITABLE FOR TACK WELDED TO TIP OF ITEM-1.	HDGI	1 NO.	ELECTRICAL CONTRACTOR	ELECTRICAL CONTRACTOR
4	10 DIA HEXAGONAL HEAD BOLTS-60mm LONG, WITH NUTS,SPRING & PLAIN WASHERS, SUITABLE FOR CONNECTIONS SHOWN IN THIS DRAWING (REFER DETAIL-4)	GI	6 SETS	ELECTRICAL CONTRACTOR	ELECTRICAL CONTRACTOR
5	PIPE SLEEVE-150 DIA, FOR ENTRY OF EARTHING CONDUCTOR (REFER DETAIL-2)	PVC	0.8MTRS	*CIVIL/ELECTRICAL CONTRACTOR	*CIVIL/ELECTRICAL CONTRACTOR
6	EARTH PIT CHAMBER (TYPE C) REFER NOTE-3	REINFORCED CONCERETE	1 NO.	*CIVIL/ELECTRICAL CONTRACTOR	*CIVIL/ELECTRICAL CONTRACTOR
7	EARTH PIT COVER (TYPE C) REFER NOTE-3	REINFORCED CONCERETE	1 NO.	*CIVIL/ELECTRICAL CONTRACTOR	*CIVIL/ELECTRICAL CONTRACTOR
8	CHARCOAL, SALT & SAND	–	1 LOT	ELECTRICAL CONTRACTOR	ELECTRICAL CONTRACTOR

* CIVIL/ELECTRICAL SCOPE SHALL BE DECIDED PROJECT SPECIFIC

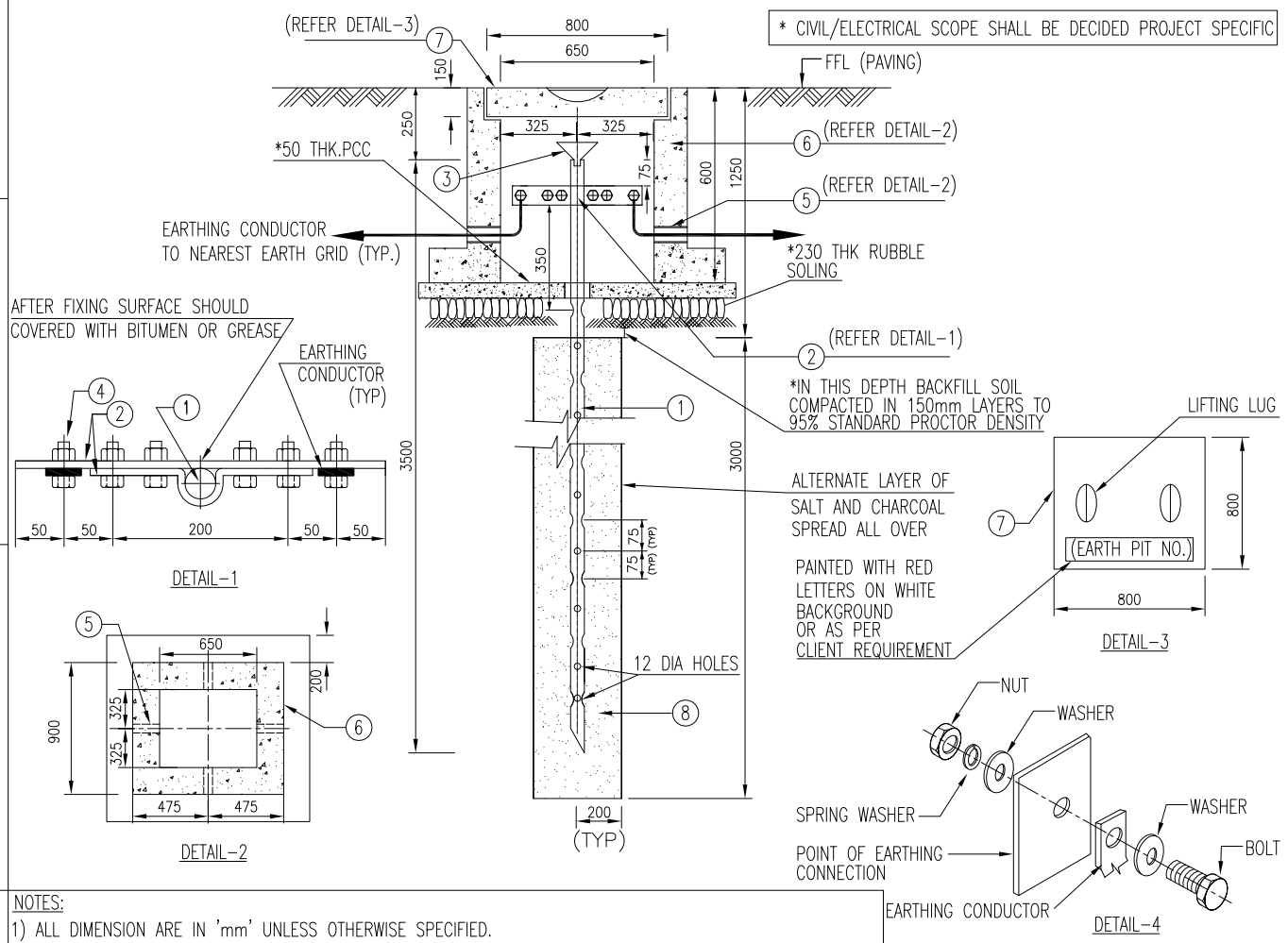

NOTES:

1) ALL DIMENSION ARE IN 'mm' UNLESS OTHERWISE SPECIFIED.
2) SIZE OF EARTHING CONDUCTOR SHALL BE AS PER THE 'EARTHING SCHEDULE' FOR THE PROJECT.
3) FOR EARTHING PIT CHAMBER & EARTH PIT COVER DETAIL REFER CIVIL STANDARD DRG.NO. PIN-LEP-CVC-1013.

DRAWING NOT TO SCALE

Code	Contract No.	Document ID	Part	Rev.
		PIN-LEP-ELT-4002		00

Rev.	Date	Name (Drawn/Prepared)	Date	Name (Checked)	Date	Name (Approved)	Description	Acc. Code	Cat. Code	Acc. Code	Status
00	24/11/15	RDK	24/11/15	ANK	24/11/15	RPM	24/11/15	RPM	ISSUED AS STANDARD		

BAR-Code

Store Location: Server/Share

Store Location: Folder

Store Name
EEP11

Pro. Unit	TON	Group	Type of Document	Sheet
				1 / 1

Con. Unit	Scale	Order No.
	NTS	

thyssenkrupp

	Date	Name
Drawn	24/11/15	RDK
Prepared	24/11/15	ANK
Checked	24/11/15	RPM
Approved	24/11/15	RPM

Description
INSTALLATION STANDARDS – EARTHING
EARTH PIT WITH PIPE ELECTRODE
FOR PAVED AREA WITH
2T CAPACITY FORKLIFT MOVEMENT (EEP11)

ISO A4

© thyssenkrupp Industrial Solutions (India) Private Limited 2017. All rights reserved

ITEM	DESCRIPTION	MATERIAL	QTY.	SUPPLY BY	INSTALLATION BY
1	EARTHING ROD, 19 DIA, 3500mm LONG	COPPER COATED STEEL	1NO.	ELECTRICAL CONTRACTOR	ELECTRICAL CONTRACTOR
2	TEST LINK ASSEMBLY-50(W)X6(T), STRIP, BENT TO SHAPE OF ITEM-1, WITH 4 NOs 12 DIA HOLES AND ANOTHER STRIP WITH 6NOs 12 DIA HOLES(REFER DETAIL-1)	COPPER COATED STEEL	1 SET	ELECTRICAL CONTRACTOR	ELECTRICAL CONTRACTOR
3	10 DIA HEXAGONAL HEAD BOLTS-60mm LONG, WITH NUTS,SPRING & PLAIN WASHERS, SUITABLE FOR CONNECTIONS SHOWN IN THIS DRAWING (REFER DETAIL-4)	SS304	6 SETS	ELECTRICAL CONTRACTOR	ELECTRICAL CONTRACTOR
4	PIPE SLEEVE-150 DIA, FOR ENTRY OF EARTHING CONDUCTOR (REFER DETAIL-2)	PVC	0.8MTRS	*CIVIL/ELECTRICAL CONTRACTOR	*CIVIL/ELECTRICAL CONTRACTOR
5	EARTH PIT CHAMBER (TYPE C) REFER NOTE-4	REINFORCED CONCERETE	1NO.	*CIVIL/ELECTRICAL CONTRACTOR	*CIVIL/ELECTRICAL CONTRACTOR
6	EARTH PIT COVER (TYPE C) REFER NOTE-4	REINFORCED CONCERETE	1NO.	*CIVIL/ELECTRICAL CONTRACTOR	*CIVIL/ELECTRICAL CONTRACTOR

* CIVIL/ELECTRICAL SCOPE SHALL BE DECIDED PROJECT SPECIFIC

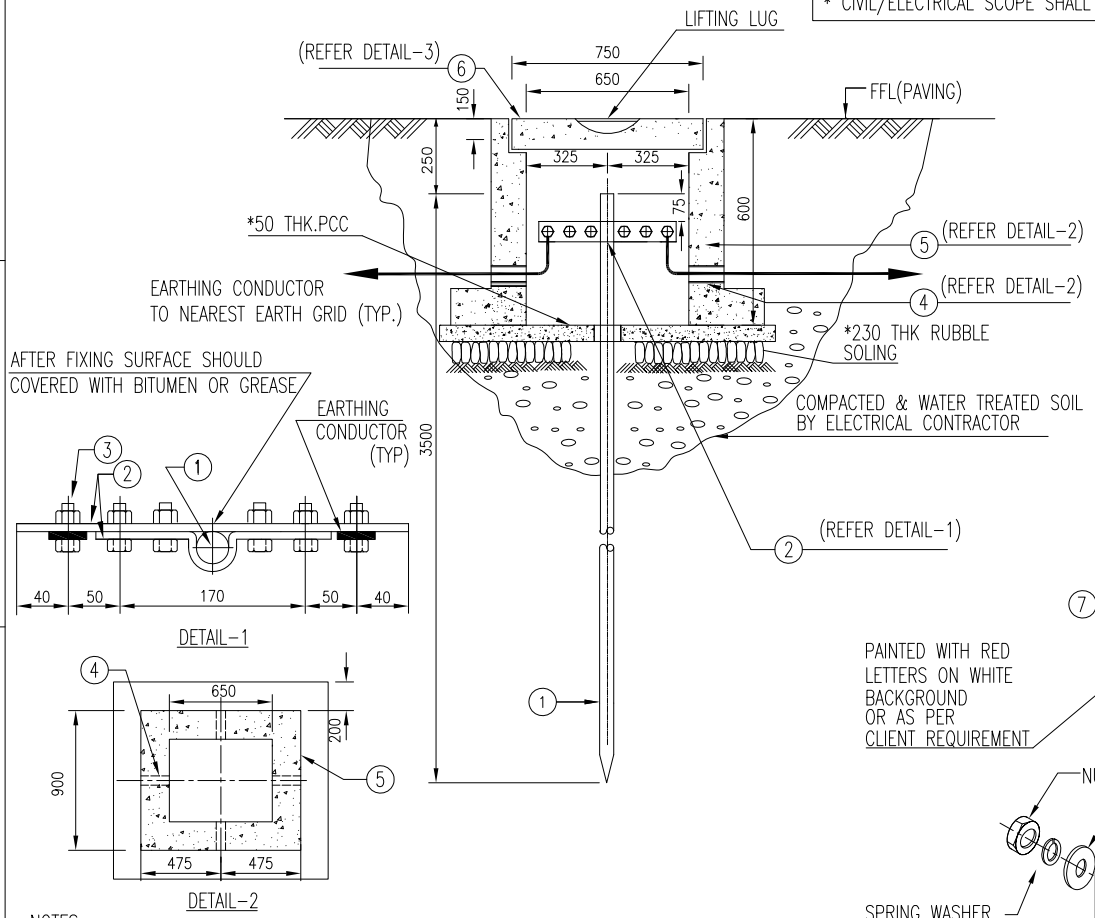

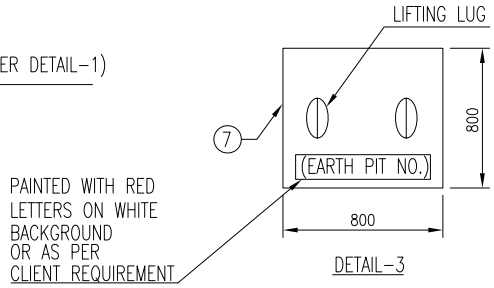

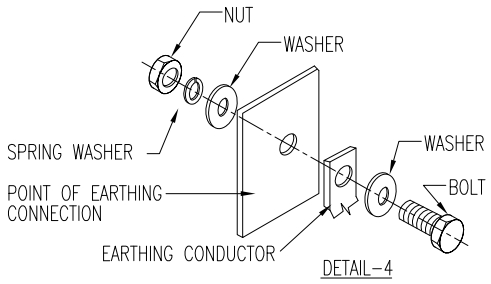

NOTES

1) ALL DIMENSION ARE IN 'mm' UNLESS OTHERWISE SPECIFIED.
2) SIZE OF EARTHING CONDUCTOR SHALL BE AS PER THE 'EARTHING SCHEDULE' FOR THE PROJECT.
3) IN GENERAL THE TOTAL LENGTH OF THE ROD ELECTRODE SHALL BE 3.5MTRS. IF ELECTRODES ARE TO BE DRIVEN DEEPER THAN 3.5MTRS, THIS REQUIREMENT SHALL BE SPECIFICALLY MENTIONED IN THE 'EARTHING LAYOUT' FOR THE PROJECT & THE SAME SHALL BE FOLLOWED DURING INSTALLATION.
4) FOR EARTHING PIT CHAMBER & EARTH PIT COVER DETAIL REFER CIVIL STANDARD DRG.NO. PIN-LEP-CVC-1013.

DRAWING NOT TO SCALE

Code	Contract No.	Document ID	Part	Rev.
		PIN-LEP-ELT-4002		00

Rev.	Date	Name (Drawn/Prepared)	Date	Name (Checked)	Date	Name (Approved)	Description	Acc. Code	Cat. Code	Acc. Code	Status
00	24/11/15	RDK	24/11/15	RPM	24/11/15	RPM	ISSUED AS STANDARD				

BAR-Code

Store Location: Server/Share

Store Location: Folder

Store Name
EEP12

Pro. Unit	TON	Group	Type of Document	Sheet
				1 / 1

Con. Unit	Scale	Order No.
	NTS	

thyssenkrupp

	Date	Name
Drawn	24/11/15	RDK
Prepared	24/11/15	ANK
Checked	24/11/15	RPM
Approved	24/11/15	RPM

Description
INSTALLATION STANDARDS – EARTHING
EARTH PIT WITH DEEP ROD ELECTRODE
FOR PAVED AREA WITH
2T CAPACITY FORKLIFT MOVEMENT (EEP12)

ISO A4

© thyssenkrupp Industrial Solutions (India) Private Limited 2017. All rights reserved

UH_BO_ISO_A4_P_E_tktSIndia.dwg / AG03_UH_BO_ISO_A4_P.dwg / 14.12.2016

ITEM	DESCRIPTION	MATERIAL	QTY.	SUPPLY BY	INSTALLATION BY
1	EARTHING PLATE-600(L)X600(W)X6.3(T), WITH 40 DIA HOLE AT CENTRE.	HDGI	1 NO	ELECTRICAL CONTRACTOR	ELECTRICAL CONTRACTOR
2	EARTHING STRIP-50(W)X12(T), WITH 12 DIA HOLES.	HDGI	AS REQUIRED	ELECTRICAL CONTRACTOR	ELECTRICAL CONTRACTOR
3	PIPE - 50 DIA N.B., CLASS-B, TAPERED AT ONE END, WITH 12 DIA THROUGH HOLES AT EVERY 75mm.	HDGI	AS REQUIRED	ELECTRICAL CONTRACTOR	ELECTRICAL CONTRACTOR
4	TEST LINK ASSEMBLY-50(W)X12(T), STRIP, BENT TO SHAPE OF ITEM-1, WITH 4 NOs 12 DIA HOLES AND ANOTHER STRIP WITH 6NOs 12 DIA HOLES(REFER DETAIL-1)	HDGI	1 SET	ELECTRICAL CONTRACTOR	ELECTRICAL CONTRACTOR
5	FUNNEL, WITH WIRE MESH-SUITABLE FOR TACK WELDED TO TIP OF ITEM-3.	HDGI	1 NO	ELECTRICAL CONTRACTOR	ELECTRICAL CONTRACTOR
6	CLAMPS-25(W)X3(T) STRIP BENT TO SHAPE OF ITEM-3, WITH 2 NOs 12 DIA HOLES.	HDGI	4 NOs	ELECTRICAL CONTRACTOR	ELECTRICAL CONTRACTOR
7	CLAMPS-25(W)X3(T) STRIP BENT TO SHAPE OF ITEM-3, WITH 2 NOs 10 DIA HOLES.	HDGI	2 NOs	ELECTRICAL CONTRACTOR	ELECTRICAL CONTRACTOR
8	12 DIA HEXAGONAL HEAD BOLTS-60mm LONG, WITH NUTS & WASHERS, SUITABLE FOR CONNECTIONS SHOWN IN THIS DRAWING (REFER DETAIL-6)	GI	16 SETS	ELECTRICAL CONTRACTOR	ELECTRICAL CONTRACTOR
9	10 DIA HEXAGONAL HEAD BOLTS-40mm LONG WITH NUTS & WASHERS, SUITABLE FOR CONNECTIONS SHOWN IN THIS DRAWING (REFER DETAIL-6)	GI	4 SETS	ELECTRICAL CONTRACTOR	ELECTRICAL CONTRACTOR
10	PIPE SLEEVE-150 DIA, FOR ENTRY OF EARTHING CONDUCTOR (REFER DETAIL-2)	PVC	0.8 MTRS	*CIVIL/ELECTRICAL CONTRACTOR	*CIVIL/ELECTRICAL CONTRACTOR
11	EARTH PIT CHAMBER (TYPE C) FOR DETAIL REFER CIVIL STANDARD DRG.NO. PIN-LEP-CVC-1013.	REINFORCED CONCERETE	1 NO	*CIVIL/ELECTRICAL CONTRACTOR	*CIVIL/ELECTRICAL CONTRACTOR
12	EARTH PIT COVER (TYPE C) FOR DETAIL REFER CIVIL STANDARD DRG.NO. PIN-LEP-CVC-1013.	REINFORCED CONCERETE	1 NO	*CIVIL/ELECTRICAL CONTRACTOR	*CIVIL/ELECTRICAL CONTRACTOR
13	CHARCOAL AND SALT	-	1 LOT	ELECTRICAL CONTRACTOR	ELECTRICAL CONTRACTOR

* CIVIL/ELECTRICAL SCOPE SHALL BE DECIDED PROJECT SPECIFIC

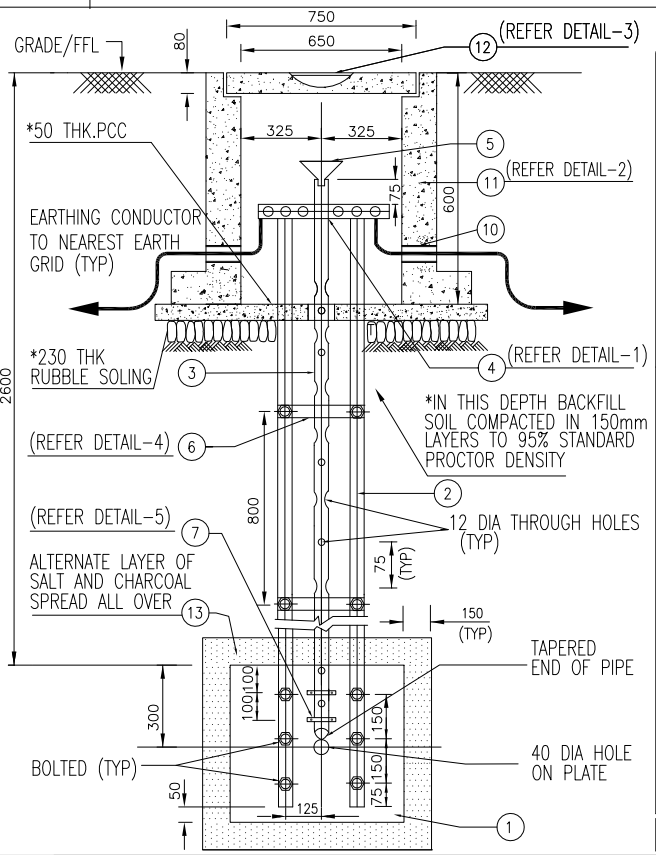

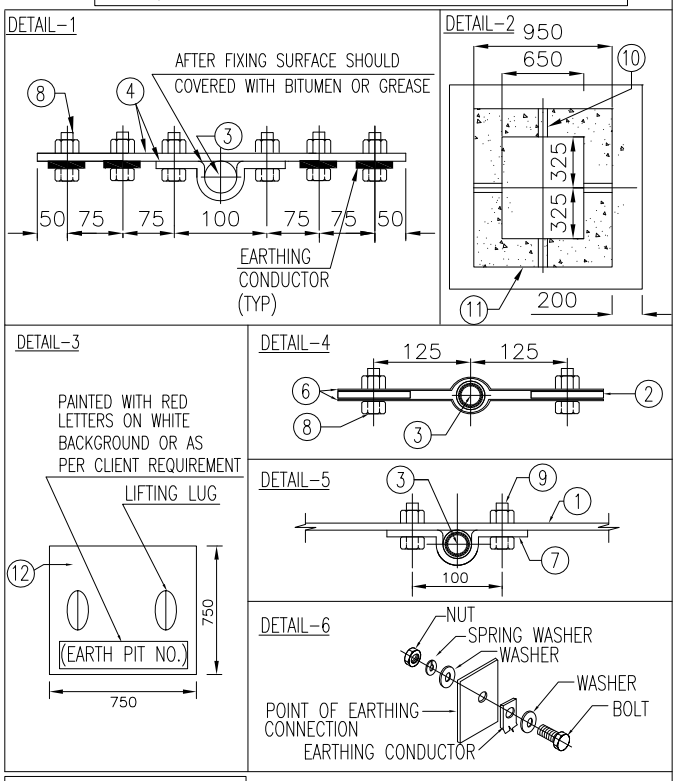

DRAWING NOT TO SCALE

Code	Contract No.	Document ID	Part	Rev.
		PIN-LEP-ELT-4002		00

Rev.	Date	Name (Drawn/Prepared)		Date	Name (Checked)		Date	Name (Approved)		Description	Acc. Code	Cat. Code	Acc. Code	Status
00	29/10/15	RDK	ANK	29/10/15	RPM		29/10/15	RPM		ISSUED AS STANDARD				

BAR-Code

Store Location: Server/Share

Store Location: Folder

Store Name
EEP13

Pro. Unit	TON	Group	Type of Document	Sheet
				1 / 1

Con. Unit	Scale	Order No.
	NTS	

thyssenkrupp

	Date	Name
Drawn	29/10/15	RDK
Prepared	29/10/15	ANK
Checked	29/10/15	RPM
Approved	29/10/15	RPM

Description
INSTALLATION STANDARDS - EARTHING
EARTH PIT WITH HDGI PLATE ELECTRODE
FOR PAVED AREA
WITH 2T CAPACITY FORKLIFT (EEP13)

ISO A4

© thyssenkrupp Industrial Solutions (India) Private Limited 2017. All rights reserved

UH_BO_ISO_A4_P_E_tkISIndia.dwg / AG03_UH_BO_ISO_A4_P.dwg / 14.12.2016

ITEM	DESCRIPTION	MATERIAL	QTY.	SUPPLY BY	INSTALLATION BY
1	EARTHING PLATE-1200(L)X1200(W)X12(T), WITH 40 DIA HOLE AT CENTRE.	CAST IRON	1 NO	ELECTRICAL CONTRACTOR	ELECTRICAL CONTRACTOR
2	EARTHING STRIP-50(W)X12(T), WITH 12 DIA HOLES.	HDGI	AS REQUIRED	ELECTRICAL CONTRACTOR	ELECTRICAL CONTRACTOR
3	PIPE - 50 DIA N.B., CLASS-B, TAPERED AT ONE END, WITH 12 DIA THROUGH HOLES AT EVERY 75mm.	HDGI	AS REQUIRED	ELECTRICAL CONTRACTOR	ELECTRICAL CONTRACTOR
4	TEST LINK ASSEMBLY-50(W)X12(T), STRIP, BENT TO SHAPE OF ITEM-1, WITH 4 NOs 12 DIA HOLES AND ANOTHER STRIP WITH 6NOs 12 DIA HOLES(REFER DETAIL-1)	HDGI	1 SET	ELECTRICAL CONTRACTOR	ELECTRICAL CONTRACTOR
5	FUNNEL, WITH WIRE MESH-SUITABLE FOR TACK WELDED TO TIP OF ITEM-3.	HDGI	1 NO	ELECTRICAL CONTRACTOR	ELECTRICAL CONTRACTOR
6	CLAMPS-25(W)X3(T) STRIP BENT TO SHAPE OF ITEM-3, WITH 2 NOs 12 DIA HOLES.	HDGI	4 NOs	ELECTRICAL CONTRACTOR	ELECTRICAL CONTRACTOR
7	CLAMPS-25(W)X3(T) STRIP BENT TO SHAPE OF ITEM-3, WITH 2 NOs 10 DIA HOLES.	HDGI	2 NOs	ELECTRICAL CONTRACTOR	ELECTRICAL CONTRACTOR
8	12 DIA HEXAGONAL HEAD BOLTS-60mm LONG, WITH NUTS & WASHERS, SUITABLE FOR CONNECTIONS SHOWN IN THIS DRAWING (REFER DETAIL-6)	GI	16 SETS	ELECTRICAL CONTRACTOR	ELECTRICAL CONTRACTOR
9	10 DIA HEXAGONAL HEAD BOLTS-40mm LONG WITH NUTS & WASHERS, SUITABLE FOR CONNECTIONS SHOWN IN THIS DRAWING (REFER DETAIL-6)	GI	4 SETS	ELECTRICAL CONTRACTOR	ELECTRICAL CONTRACTOR
10	PIPE SLEEVE-150 DIA, FOR ENTRY OF EARTHING CONDUCTOR (REFER DETAIL-2)	PVC	0.8 MTRS	*CIVIL/ELECTRICAL CONTRACTOR	*CIVIL/ELECTRICAL CONTRACTOR
11	EARTH PIT CHAMBER (TYPE C) FOR DETAIL REFER CIVIL STANDARD DRG.NO. PIN-LEP-CVC-1013.	REINFORCED CONCERETE	1 NO	*CIVIL/ELECTRICAL CONTRACTOR	*CIVIL/ELECTRICAL CONTRACTOR
12	EARTH PIT COVER (TYPE C) FOR DETAIL REFER CIVIL STANDARD DRG.NO. PIN-LEP-CVC-1013.	REINFORCED CONCERETE	1 NO	*CIVIL/ELECTRICAL CONTRACTOR	*CIVIL/ELECTRICAL CONTRACTOR
13	CHARCOAL AND SALT	-	1 LOT	ELECTRICAL CONTRACTOR	ELECTRICAL CONTRACTOR

* CIVIL/ELECTRICAL SCOPE SHALL BE DECIDED PROJECT SPECIFIC

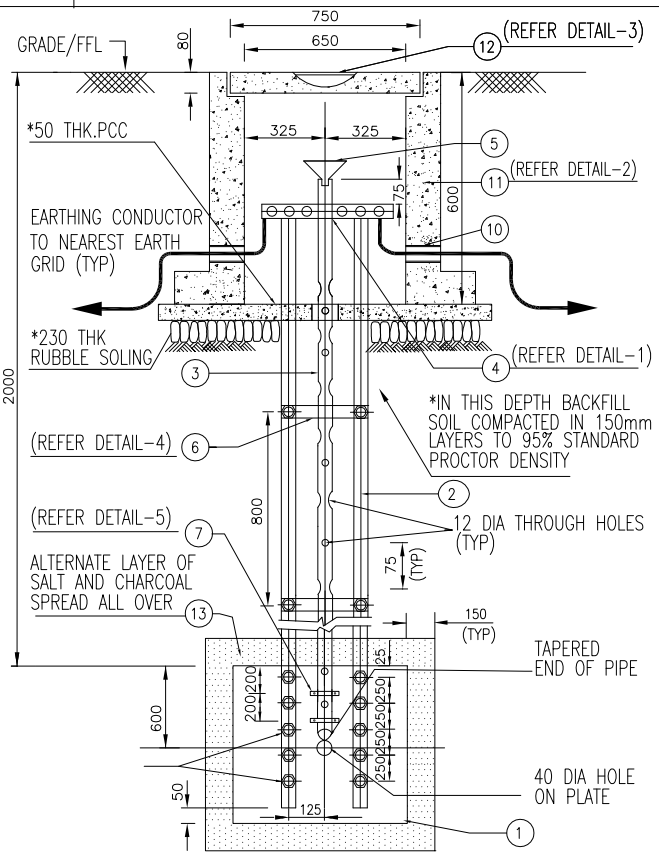

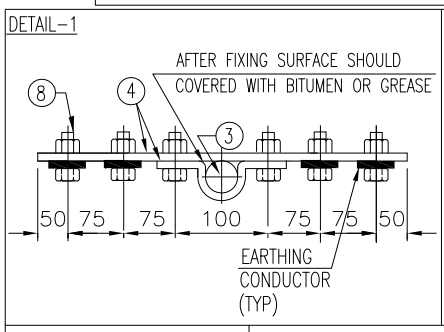

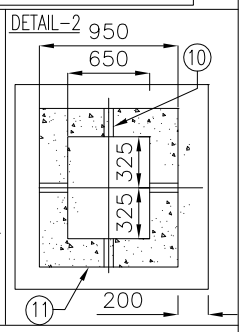

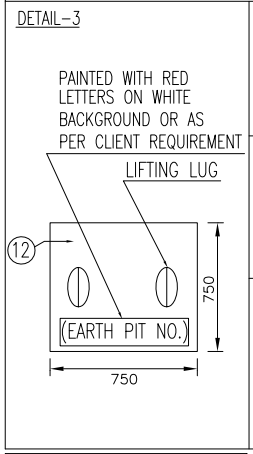

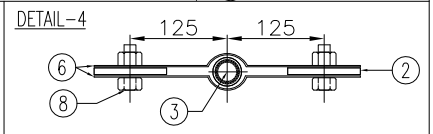

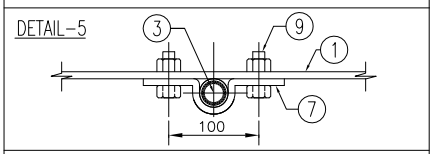

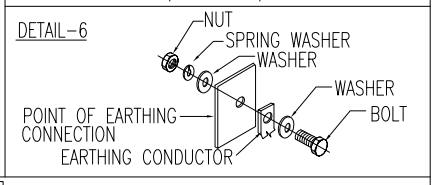

DRAWING NOT TO SCALE

Code	Contract No.	Document ID	Part	Rev.
		PIN-LEP-ELT-4002		00

Rev.	Date	Name (Drawn/Prepared)		Date	Name (Checked)	Date	Name (Approved)	Description	Acc. Code	Cat. Code	Acc. Code	Status
00	24/11/15	RDK	ANK	24/11/15	RPM	24/11/15	RPM	ISSUED AS STANDARD				

BAR-Code

Store Location: Server/Share

Store Location: Folder

Store Name: EEP14

Pro. Unit	TON	Group	Type of Document	Sheet
				1 / 1

Con. Unit	Scale	Order No.
	NTS	

thyssenkrupp

	Date	Name
Drawn	24/11/15	RDK
Prepared	24/11/15	ANK
Checked	24/11/15	RPM
Approved	24/11/15	RPM

Description: INSTALLATION STANDARDS - EARTHING EARTH PIT WITH CI PLATE ELECTRODE FOR PAVED AREA WITH 2T CAPACITY FORKLIFT (EEP14)

ISO A4

UH_BO_ISO_A4_P_E_tkiSIndia.dwg / AG03_UH_BO_ISO_A4_P.dwg / 14.12.2016

© thyssenkrupp Industrial Solutions (India) Private Limited 2017. All rights reserved

ITEM	DESCRIPTION	MATERIAL	QTY.	SUPPLY BY	INSTALLATION BY
1	EARTHING PIPE – 3500mm LONG,100 DIA , 13mm THICK TAPERED AT ONE END, WITH 12 DIA THROUGH HOLES AT EVERY 75mm.	CAST IRON	1 NO.	ELECTRICAL CONTRACTOR	ELECTRICAL CONTRACTOR
2	TEST LINK ASSEMBLY–50(W)X6(T), STRIP, BENT TO SHAPE OF ITEM–1, WITH 4 NOs 12 DIA HOLES AND ANOTHER STRIP WITH 6NOs 12 DIA HOLES(REFER DETAIL–1)	HDGI	1 SET	ELECTRICAL CONTRACTOR	ELECTRICAL CONTRACTOR
3	FUNNEL, WITH WIRE MESH–SUITABLE FOR TACK WELDED TO TIP OF ITEM–1.	HDGI	1 NO.	ELECTRICAL CONTRACTOR	ELECTRICAL CONTRACTOR
4	10 DIA HEXAGONAL HEAD BOLTS–60mm LONG, WITH NUTS,SPRING & PLAIN WASHERS, SUITABLE FOR CONNECTIONS SHOWN IN THIS DRAWING (REFER DETAIL–4)	GI	6 SETS	ELECTRICAL CONTRACTOR	ELECTRICAL CONTRACTOR
5	PIPE SLEEVE–150 DIA, FOR ENTRY OF EARTHING CONDUCTOR (REFER DETAIL–2)	PVC	0.8MTRS	*CIVIL/ELECTRICAL CONTRACTOR	*CIVIL/ELECTRICAL CONTRACTOR
6	EARTH PIT CHAMBER (TYPE C) REFER NOTE–3	REINFORCED CONCERETE	1 NO.	*CIVIL/ELECTRICAL CONTRACTOR	*CIVIL/ELECTRICAL CONTRACTOR
7	EARTH PIT COVER (TYPE C) REFER NOTE–3	REINFORCED CONCERETE	1 NO.	*CIVIL/ELECTRICAL CONTRACTOR	*CIVIL/ELECTRICAL CONTRACTOR
8	CHARCOAL, SALT & SAND	–	1 LOT	ELECTRICAL CONTRACTOR	ELECTRICAL CONTRACTOR

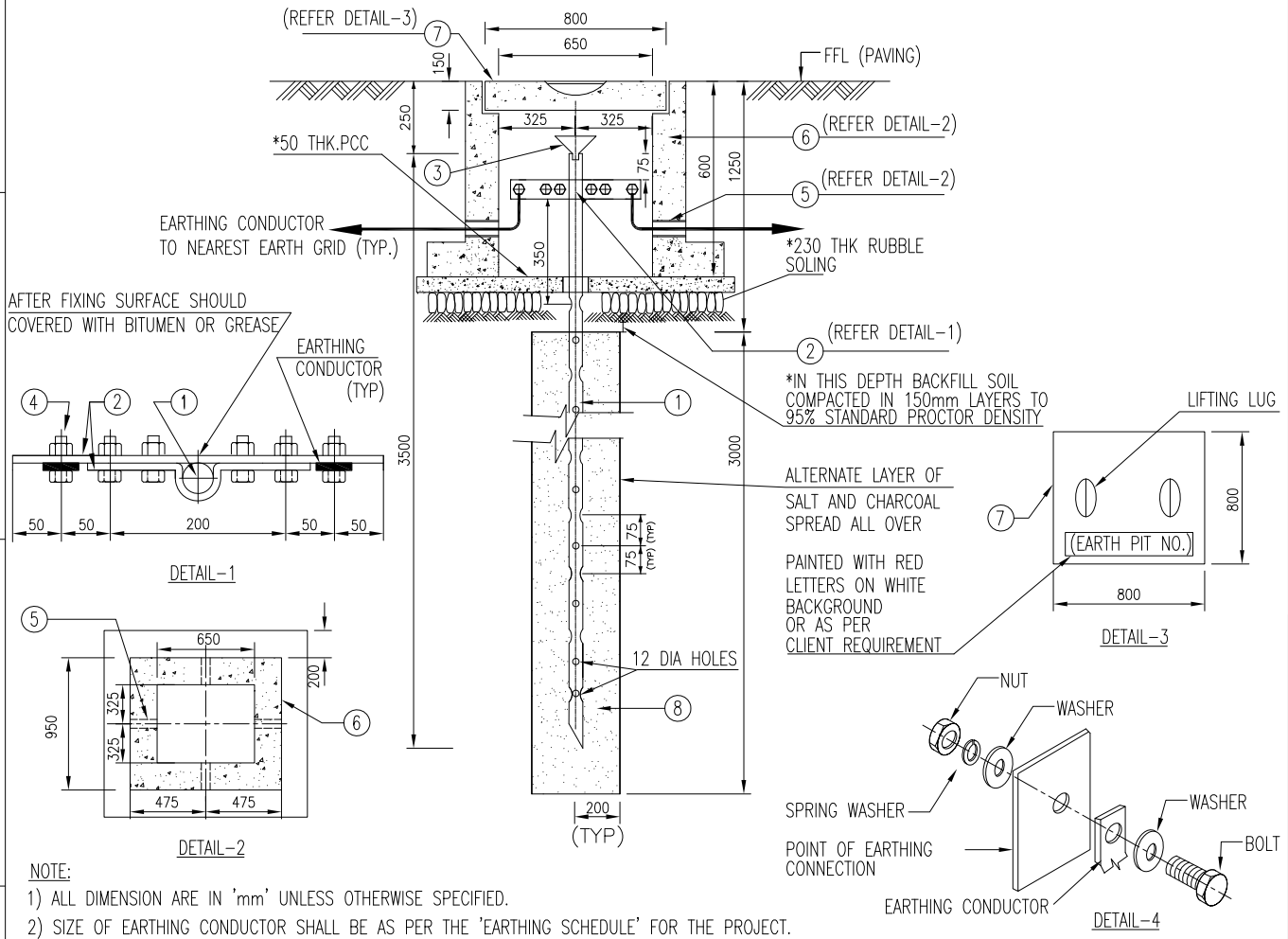

NOTE:

1) ALL DIMENSION ARE IN 'mm' UNLESS OTHERWISE SPECIFIED.
2) SIZE OF EARTHING CONDUCTOR SHALL BE AS PER THE 'EARTHING SCHEDULE' FOR THE PROJECT.
3) FOR EARTHING PIT CHAMBER & EARTH PIT COVER DETAIL REFER CIVIL STANDARD DRG.NO. PIN–LEP–CVC–1013.

DRAWING NOT TO SCALE

Code	Contract No.	Document ID	Part	Rev.
		PIN–LEP–ELT–4002		00

Rev.	Date	Name (Drawn/Prepared)	Date	Name (Checked)	Date	Name (Approved)	Description	Acc. Code	Cat. Code	Acc. Code	Status
00	24/11/15	RDK	ANK	24/11/15	RPM	24/11/15	RPM	ISSUED AS STANDARD			

BAR–Code

Store Location: Server/Share

Store Location: Folder

Store Name
EEP15

Pro. Unit	TON	Group	Type of Document	Sheet
				1 / 1

Con. Unit	Scale	Order No.
	NTS	

thyssenkrupp

	Date	Name
Drawn	24/11/15	RDK
Prepared	24/11/15	ANK
Checked	24/11/15	RPM
Approved	24/11/15	RPM

Description
INSTALLATION STANDARDS – EARTHING
EARTH PIT WITH CI PIPE ELECTRODE
FOR PAVED AREA
WITH 2T CAPACITY FORKLIFT (EEP15)

ISO A4

UH_BO_ISO_A4_P_E_tktSIndia.dwg / AG03_UH_BO_ISO_A4_P.dwg / 14.12.2016

© thyssenkrupp Industrial Solutions (India) Private Limited 2017. All rights reserved

ITEM	DESCRIPTION	MATERIAL	QTY.	SUPPLY BY	INSTALLATION BY
1	EARTHING PLATE-600(L)X600(W)X3(T), WITH 50 DIA HOLE AT CENTRE.	CU	1 NO	ELECTRICAL CONTRACTOR	ELECTRICAL CONTRACTOR
2	EARTHING STRIP-35(W)X6(T), WITH 12 DIA HOLES.	CU	AS REQUIRED	ELECTRICAL CONTRACTOR	ELECTRICAL CONTRACTOR
3	PIPE - 50 DIA N.B., CLASS-B, TAPERED AT ONE END, WITH 12 DIA THROUGH HOLES AT EVERY 75mm.	HDGI	AS REQUIRED	ELECTRICAL CONTRACTOR	ELECTRICAL CONTRACTOR
4	TEST LINK ASSEMBLY-35(W)X6(T), STRIP, BENT TO SHAPE OF ITEM-1, WITH 2 NOs 12 DIA HOLES AND ANOTHER STRIP WITH 6NOs 12 DIA HOLES(REFER DETAIL-1)	CU	1 SET	ELECTRICAL CONTRACTOR	ELECTRICAL CONTRACTOR
5	FUNNEL, WITH WIRE MESH-SUITABLE FOR TACK WELDED TO TIP OF ITEM-3.	HDGI	1 NO	ELECTRICAL CONTRACTOR	ELECTRICAL CONTRACTOR
6	CLAMPS-25(W)X4(T) STRIP BENT TO SHAPE OF ITEM-3, WITH 2 NOs 12 DIA HOLES.	CU	4 NOs	ELECTRICAL CONTRACTOR	ELECTRICAL CONTRACTOR
7	CLAMPS-25(W)X4(T) STRIP BENT TO SHAPE OF ITEM-3, WITH 2 NOs 10 DIA HOLES.	CU	2 NOs	ELECTRICAL CONTRACTOR	ELECTRICAL CONTRACTOR
8	12 DIA HEXAGONAL HEAD BOLTS-40mm LONG, WITH NUTS & WASHERS, SUITABLE FOR CONNECTIONS SHOWN IN THIS DRAWING (REFER DETAIL-6)	BRASS		ELECTRICAL CONTRACTOR	ELECTRICAL CONTRACTOR
9	10 DIA HEXAGONAL HEAD BOLTS-30mm LONG WITH NUTS & WASHERS, SUITABLE FOR CONNECTIONS SHOWN IN THIS DRAWING (REFER DETAIL-6)	BRASS		ELECTRICAL CONTRACTOR	ELECTRICAL CONTRACTOR
10	PIPE SLEEVE-150 DIA, FOR ENTRY OF EARTHING CONDUCTOR (REFER DETAIL-2)	PVC	0.8 MTRS	*CIVIL/ELECTRICAL CONTRACTOR	*CIVIL/ELECTRICAL CONTRACTOR
11	EARTH PIT CHAMBER (TYPE A) FOR DETAIL REFER CIVIL STANDARD DRG.NO. PIN-LEP-CVC-1013.	REINFORCED CONCERETE	1 NO	*CIVIL/ELECTRICAL CONTRACTOR	*CIVIL/ELECTRICAL CONTRACTOR
12	EARTH PIT COVER (TYPE A) FOR DETAIL REFER CIVIL STANDARD DRG.NO. PIN-LEP-CVC-1013.	REINFORCED CONCERETE	1 NO	*CIVIL/ELECTRICAL CONTRACTOR	*CIVIL/ELECTRICAL CONTRACTOR
13	CHARCOAL AND SALT	-	1 LOT	ELECTRICAL CONTRACTOR	ELECTRICAL CONTRACTOR

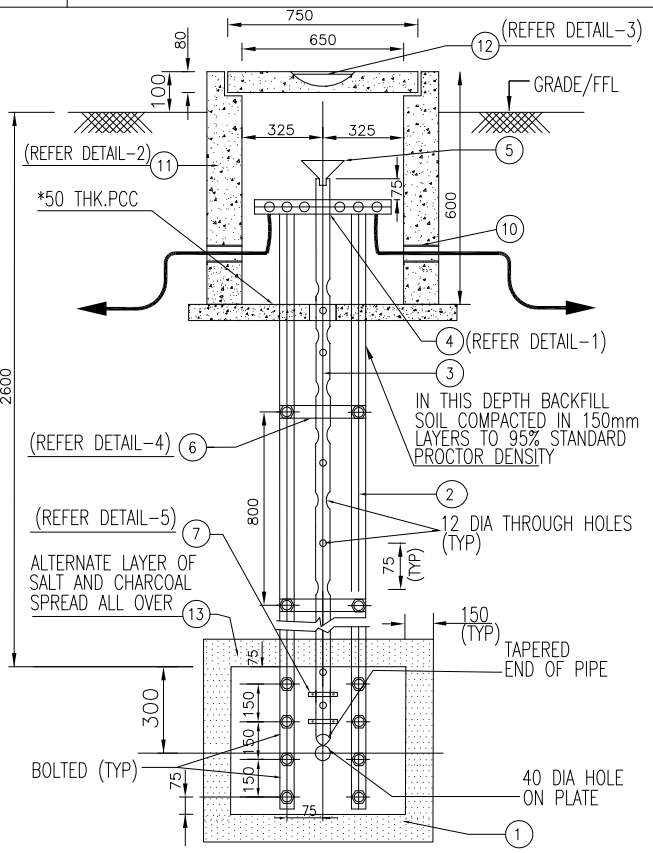

* CIVIL/ELECTRICAL SCOPE SHALL BE DECIDED PROJECT SPECIFIC

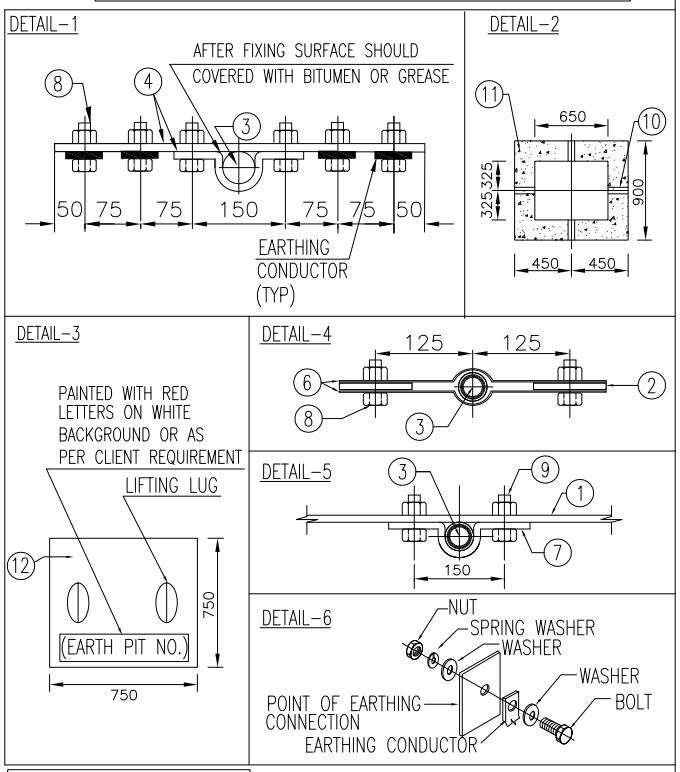

DRAWING NOT TO SCALE

Code	Contract No.	Document ID	Part	Rev.
		PIN-LEP-ELT-4002		00

Rev.	Date	Name (Drawn/Prepared)	Date	Name (Checked)	Date	Name (Approved)	Description	Acc. Code	Cat. Code	Acc. Code	Status
00	24/11/15	RDK ANK	24/11/15	RPM	24/11/15	RPM	ISSUED AS STANDARD				

BAR-Code

Store Location: Server/Share

Store Location: Folder

Store Name: EEP16

Pro. Unit	TON	Group	Type of Document	Sheet
				1 / 1

Con. Unit	Scale	Order No.
	NTS	

thyssenkrupp

	Date	Name
Drawn	24/11/15	RDK
Prepared	24/11/15	ANK
Checked	24/11/15	RPM
Approved	24/11/15	RPM

Description: INSTALLATION STANDARDS - EARTHING EARTH PIT WITH CU PLATE ELECTRODE FOR UNPAVED AREA (EEP16)

ISO A4

UH_BO_ISO_A4_P_E_tkIS India.dwg / AG03_UH_BO_ISO_A4_P.dwg / 14.12.2016

© thyssenkrupp Industrial Solutions (India) Private Limited 2017. All rights reserved

ITEM	DESCRIPTION	MATERIAL	QTY.	SUPPLY BY	INSTALLATION BY
1	EARTHING PLATE-600(L)X600(W)X3(T), WITH 50 DIA HOLE AT CENTRE.	CU	1 NO	ELECTRICAL CONTRACTOR	ELECTRICAL CONTRACTOR
2	EARTHING STRIP-35(W)X6(T), WITH 12 DIA HOLES.	CU	AS REQUIRED	ELECTRICAL CONTRACTOR	ELECTRICAL CONTRACTOR
3	PIPE - 50 DIA N.B., CLASS-B, TAPERED AT ONE END, WITH 12 DIA THROUGH HOLES AT EVERY 75mm.	HDGI	AS REQUIRED	ELECTRICAL CONTRACTOR	ELECTRICAL CONTRACTOR
4	TEST LINK ASSEMBLY-35(W)X6(T), STRIP, BENT TO SHAPE OF ITEM-1, WITH 2 NOs 12 DIA HOLES AND ANOTHER STRIP WITH 6NOs 12 DIA HOLES(REFER DETAIL-1)	CU	1 SET	ELECTRICAL CONTRACTOR	ELECTRICAL CONTRACTOR
5	FUNNEL, WITH WIRE MESH-SUITABLE FOR TACK WELDED TO TIP OF ITEM-3.	HDGI	1 NO	ELECTRICAL CONTRACTOR	ELECTRICAL CONTRACTOR
6	CLAMPS-25(W)X4(T) STRIP BENT TO SHAPE OF ITEM-3, WITH 2 NOs 12 DIA HOLES.	CU	4 NOs	ELECTRICAL CONTRACTOR	ELECTRICAL CONTRACTOR
7	CLAMPS-25(W)X4(T) STRIP BENT TO SHAPE OF ITEM-3, WITH 2 NOs 10 DIA HOLES.	CU	2 NOs	ELECTRICAL CONTRACTOR	ELECTRICAL CONTRACTOR
8	12 DIA HEXAGONAL HEAD BOLTS-40mm LONG, WITH NUTS & WASHERS, SUITABLE FOR CONNECTIONS SHOWN IN THIS DRAWING (REFER DETAIL-6)	BRASS	AS REQUIRED	ELECTRICAL CONTRACTOR	ELECTRICAL CONTRACTOR
9	10 DIA HEXAGONAL HEAD BOLTS-30mm LONG WITH NUTS & WASHERS, SUITABLE FOR CONNECTIONS SHOWN IN THIS DRAWING (REFER DETAIL-6)	BRASS	AS REQUIRED	ELECTRICAL CONTRACTOR	ELECTRICAL CONTRACTOR
10	PIPE SLEEVE-150 DIA, FOR ENTRY OF EARTHING CONDUCTOR (REFER DETAIL-2)	PVC	0.8 MTRS	*CIVIL/ELECTRICAL CONTRACTOR	*CIVIL/ELECTRICAL CONTRACTOR
11	EARTH PIT CHAMBER (TYPE A) FOR DETAIL REFER CIVIL STANDARD DRG.NO. PIN-LEP-CVC-1013.	REINFORCED CONCERETE	1 NO	*CIVIL/ELECTRICAL CONTRACTOR	*CIVIL/ELECTRICAL CONTRACTOR
12	EARTH PIT COVER (TYPE A) FOR DETAIL REFER CIVIL STANDARD DRG.NO. PIN-LEP-CVC-1013.	REINFORCED CONCERETE	1 NO	*CIVIL/ELECTRICAL CONTRACTOR	*CIVIL/ELECTRICAL CONTRACTOR
13	CHARCOAL AND SALT	-	1 LOT	ELECTRICAL CONTRACTOR	ELECTRICAL CONTRACTOR

* CIVIL/ELECTRICAL SCOPE SHALL BE DECIDED PROJECT SPECIFIC

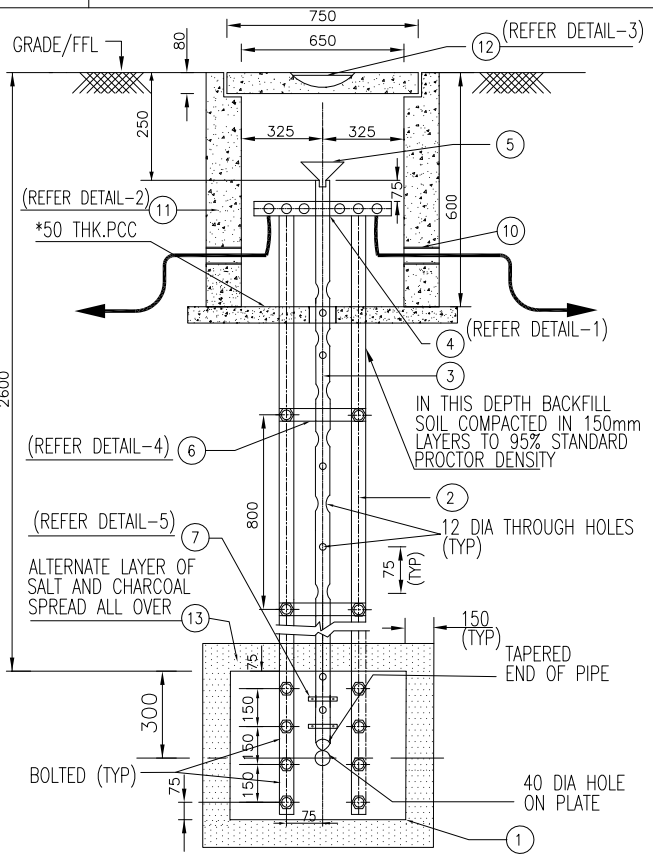

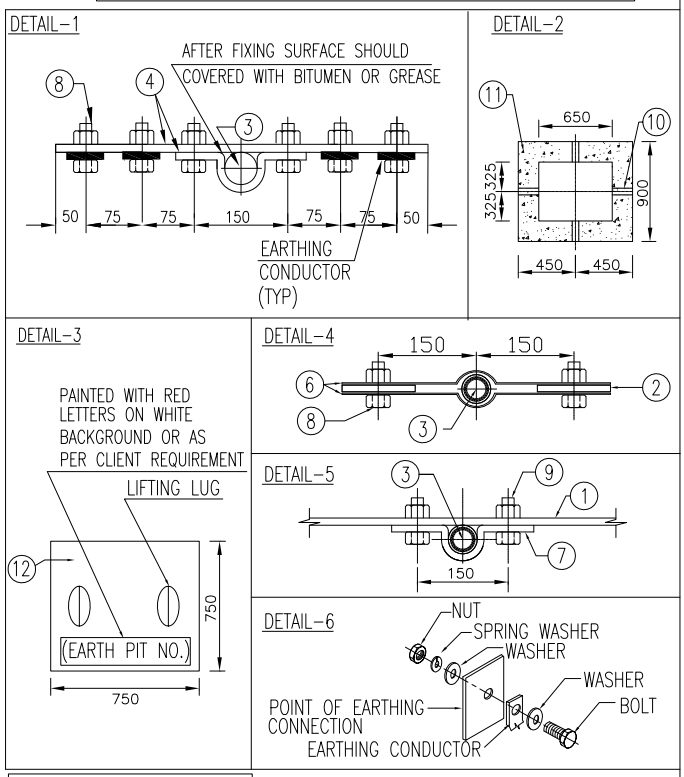

DRAWING NOT TO SCALE

Code	Contract No.	Document ID	Part	Rev.
		09EL-L43-A03		00

Rev.	Date	Name (Drawn/Prepared)		Date	Name (Checked)		Date	Name (Approved)	Description	Acc. Code	Cat. Code	Acc. Code	Status
00	15/11/16	RDK	ANK	15/11/16	RPM		15/11/16	RPM	ISSUED AS STANDARD				

BAR-Code

Store Location: Server/Share

Store Location: Folder

Store Name: EEP17

Pro. Unit	TON	Group	Type of Document	Sheet
				1 / 1

Con. Unit	Scale	Order No.
	NTS	

thyssenkrupp

	Date	Name
Drawn	15/11/16	RDK
Prepared	15/11/16	ANK
Checked	15/11/16	RPM
Approved	15/11/16	RPM

Description
INSTALLATION STANDARDS - EARTHING
EARTH PIT WITH CU PLATE ELECTRODE
FOR PAVED AREA
WITHOUT FORKLIFT MOVEMENT (EEP17)

ISO A4

UH_BO_ISO_A4_P_E_tktSIndia.dwg / AG03_UH_BO_ISO_A4_P.dwg / 14.12.2016

© thyssenkrupp Industrial Solutions (India) Private Limited 2017. All rights reserved

ITEM	DESCRIPTION	MATERIAL	QTY.	SUPPLY BY	INSTALLATION BY
1	EARTHING PLATE-600(L)X600(W)X3(T), WITH 50 DIA HOLE AT CENTRE.	CU	1 NO	ELECTRICAL CONTRACTOR	ELECTRICAL CONTRACTOR
2	EARTHING STRIP-35(W)X6(T), WITH 12 DIA HOLES.	CU	AS REQUIRED	ELECTRICAL CONTRACTOR	ELECTRICAL CONTRACTOR
3	PIPE - 50 DIA N.B., CLASS-B, TAPERED AT ONE END, WITH 12 DIA THROUGH HOLES AT EVERY 75mm.	HDGI	AS REQUIRED	ELECTRICAL CONTRACTOR	ELECTRICAL CONTRACTOR
4	TEST LINK ASSEMBLY-35(W)X6(T), STRIP, BENT TO SHAPE OF ITEM-1, WITH 2 NOs 12 DIA HOLES AND ANOTHER STRIP WITH 6NOs 12 DIA HOLES(REFER DETAIL-1)	CU	1 SET	ELECTRICAL CONTRACTOR	ELECTRICAL CONTRACTOR
5	FUNNEL, WITH WIRE MESH-SUITABLE FOR TACK WELDED TO TIP OF ITEM-3.	HDGI	1 NO	ELECTRICAL CONTRACTOR	ELECTRICAL CONTRACTOR
6	CLAMPS-25(W)X4(T) STRIP BENT TO SHAPE OF ITEM-3, WITH 2 NOs 12 DIA HOLES.	CU	4 NOs	ELECTRICAL CONTRACTOR	ELECTRICAL CONTRACTOR
7	CLAMPS-25(W)X4(T) STRIP BENT TO SHAPE OF ITEM-3, WITH 2 NOs 10 DIA HOLES.	CU	2 NOs	ELECTRICAL CONTRACTOR	ELECTRICAL CONTRACTOR
8	12 DIA HEXAGONAL HEAD BOLTS-40mm LONG, WITH NUTS & WASHERS, SUITABLE FOR CONNECTIONS SHOWN IN THIS DRAWING (REFER DETAIL-6)	BRASS	AS REQUIRED	ELECTRICAL CONTRACTOR	ELECTRICAL CONTRACTOR
9	10 DIA HEXAGONAL HEAD BOLTS-30mm LONG WITH NUTS & WASHERS, SUITABLE FOR CONNECTIONS SHOWN IN THIS DRAWING (REFER DETAIL-6)	BRASS	AS REQUIRED	ELECTRICAL CONTRACTOR	ELECTRICAL CONTRACTOR
10	PIPE SLEEVE-150 DIA, FOR ENTRY OF EARTHING CONDUCTOR (REFER DETAIL-2)	PVC	0.8 MTRS	*CIVIL/ELECTRICAL CONTRACTOR	*CIVIL/ELECTRICAL CONTRACTOR
11	EARTH PIT CHAMBER (TYPE C) FOR DETAIL REFER CIVIL STANDARD DRG.NO. PIN-LEP-CVC-1013.	REINFORCED CONCERETE	1 NO	*CIVIL/ELECTRICAL CONTRACTOR	*CIVIL/ELECTRICAL CONTRACTOR
12	EARTH PIT COVER (TYPE C) FOR DETAIL REFER CIVIL STANDARD DRG.NO. PIN-LEP-CVC-1013.	REINFORCED CONCERETE	1 NO	*CIVIL/ELECTRICAL CONTRACTOR	*CIVIL/ELECTRICAL CONTRACTOR
13	CHARCOAL AND SALT	-	1 LOT	ELECTRICAL CONTRACTOR	ELECTRICAL CONTRACTOR

* CIVIL/ELECTRICAL SCOPE SHALL BE DECIDED PROJECT SPECIFIC

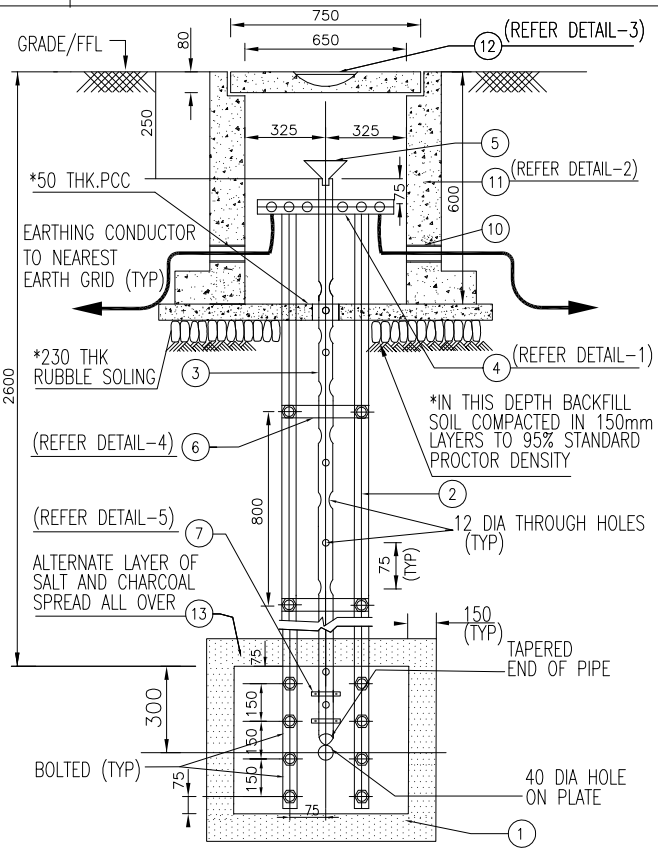

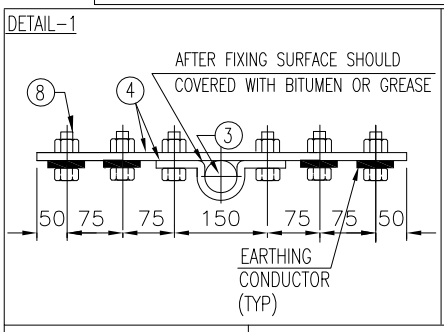

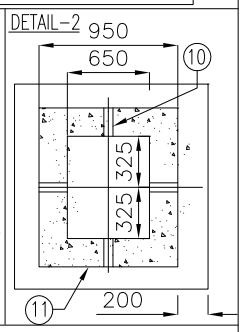

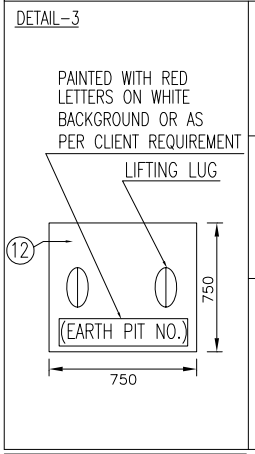

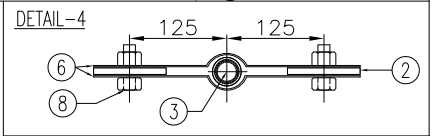

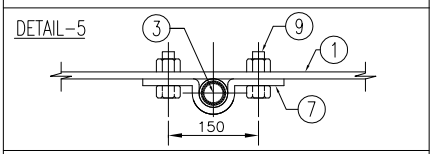

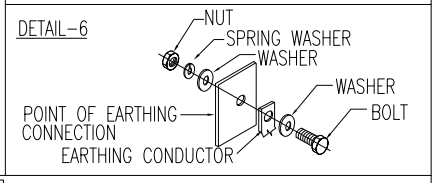

DRAWING NOT TO SCALE

Code	Contract No.	Document ID	Part	Rev.
		09EL-L43-A03		00

Rev.	Date	Name (Drawn/Prepared)	Date	Name (Checked)	Date	Name (Approved)	Description	Acc. Code	Cat. Code	Acc. Code	Status
00	15/11/16	RDK	ANK	15/11/16	RPM	15/11/16	RPM	ISSUED AS STANDARD			

BAR-Code

Store Location: Server/Share

Store Location: Folder

Store Name: EEP18

Pro. Unit	TON	Group	Type of Document	Sheet
				1 / 1

Con. Unit	Scale	Order No.
	NTS	

thyssenkrupp

	Date	Name
Drawn	15/11/16	RDK
Prepared	15/11/16	ANK
Checked	15/11/16	RPM
Approved	15/11/16	RPM

Description

INSTALLATION STANDARDS - EARTHING EARTH PIT WITH CU PLATE ELECTRODE FOR PAVED AREA WITH 2T CAPACITY FORKLIFT MOVEMENT(EEP18)

ISO A4

UH_BO_ISO_A4_P_E_tkiIsIndia.dwg / AG03_UH_BO_ISO_A4_P.dwg / 14.12.2016

© thyssenkrupp Industrial Solutions (India) Private Limited 2017. All rights reserved

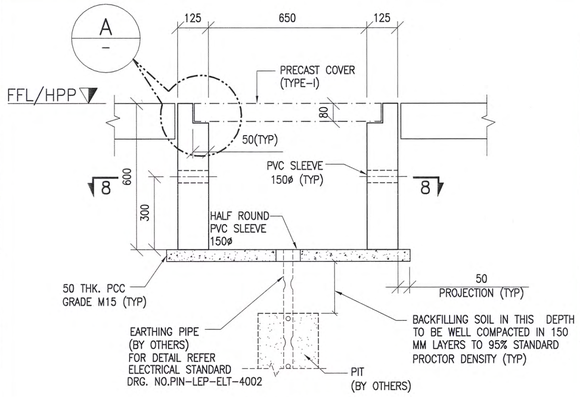

TYPICAL SECTION OF EARTH PIT CHAMBER IN PAVED AREA (TYPE A)

(WITHOUT FORKLIFT LOADING) (REFER NOTE 7)
SELF WEIGHT OF PRECAST CHAMBER = 582kg(EXCLUDING WEIGHT OF PRECAST COVER)

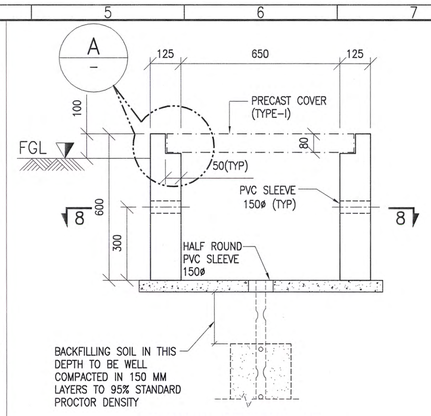

TYPICAL SECTION OF EARTH PIT CHAMBER IN UNPAVED AREA (TYPE B)

(WITHOUT FORKLIFT LOADING) (REFER NOTE 7)
SELF WEIGHT OF PRECAST CHAMBER = 582kg
(EXCLUDING WEIGHT OF PRECAST COVER)

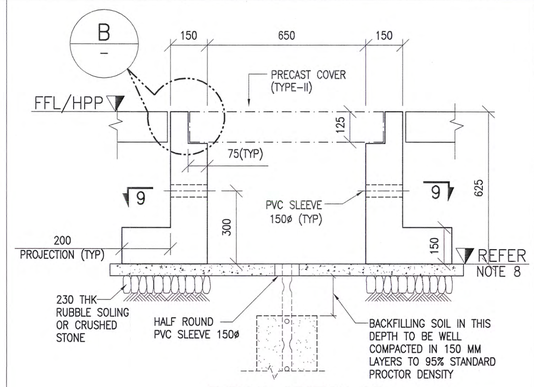

TYPICAL SECTION OF EARTH PIT CHAMBER IN PAVED AREA (TYPE C)

(WITH 2T CAPACITY FORKLIFT) (REFER NOTE 7)
SELF WEIGHT OF PRECAST CHAMBER = 2475kg
(EXCLUDING WEIGHT OF PRECAST COVER)

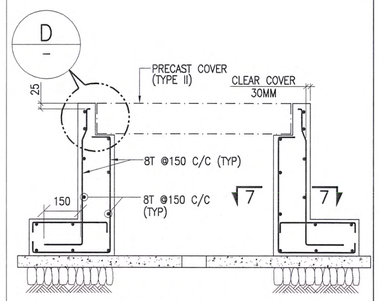

REINFORCEMENT DETAILS OF EARTH PIT CHAMBER (TYPE C)

NOTES:

1. ALL DIMENSIONS ARE IN MILLIMETERS.
2. GRADE OF CONCRETE FOR PRECAST CONCRETE COVER IS M30.
   GRADE OF CONCRETE FOR RCC PIT IS
   (A) M25 FOR CAST IN SITU RCC PIT.
   (B) M30 FOR PRECAST RCC PIT.
   IF DUE TO PROJECT REQUIREMENT, HIGHER CONCRETE GRADES ARE TO BE USED, THEN, SAME SHALL BE FOLLOWED.
3. GRADE OF REINFORCEMENT SHALL BE TOR STEEL Fe 500D AS PER IS 1786: 2008.
4. MINIMUM GRADE OF STEEL FOR LIFTING HOOK SHOULD BE MILD STEEL Fe 250 AS PER IS432(PART I). ALTERNATIVELY TOR STEEL FE 415D AS PER IS 1786: 2008 CAN BE USED, IF MILD STEEL IS NOT AVAILABLE.
5. CONTRACTOR MAY MAKE THIS EARTH PITS AS PRECAST UNITS.CONTRACTER CAN USE SLEEVE OPENINGS TO FIX THE LIFTING ASSEMBLY.
6. PRECAST CONCRETE COVER(TYPE II) IS DESIGNED TO SUPPORT 2T CAPACITY FORKLIFT, FOR FORKLIFT LOADS, REFER DRAWING PIN-LEP-CVC-1011.
7. LAYING OF PCC AND CONSTRUCTION OF PIT CHAMBER SHALL BE CARRIED OUT AFTER CARRYING OF FOLLOWING ACTIVITIES:
   (a) MAKING OF HOLE IN THE GROUND & FILLING THE SAME WITH CHARCOAL,SALT & SAND AS GIVEN IN ELECTRICAL DWG. NO. PIN-LEP-ELT-4002.
   (b) BACK FILLING UPTO BOTTOM OF PCC & COMPACTING THE SAME AS SHOWN IN THE DRAWING.
8. MINIMUM SAFE BEARING CAPACITY OF SOIL AT THIS LEVEL SHALL BE 6T/M².

LEGEND:

HPP – HIGH POINT PAVING
FFL – FINISHED FLOOR LEVEL
FGL – FINISHED GRADE LEVEL

SYMBOL:

T – TOR STEEL
R – MILD STEEL

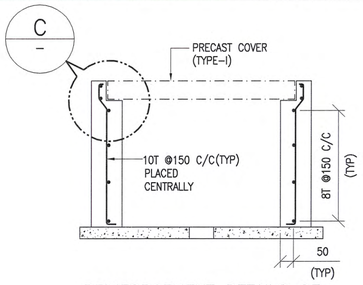

REINFORCEMENT DETAILS OF EARTH PIT CHAMBER TYPE A & B

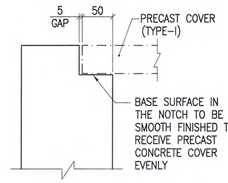

DETAIL A

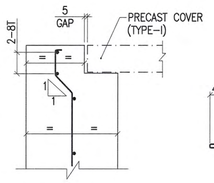

DETAIL C

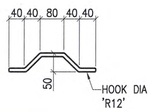

HOOK DETAILS PRECAST COVER (TYPE-I)

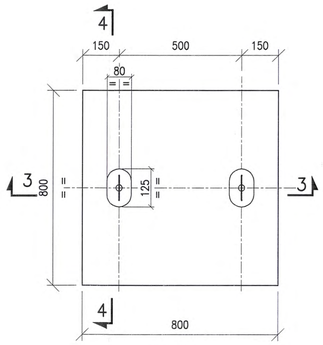

PLAN PRECAST COVER(TYPE-II)
(SELF WEIGHT OF PRECAST COVER = 240kg)

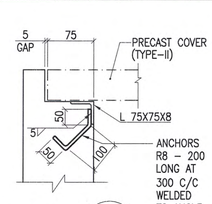

DETAIL B

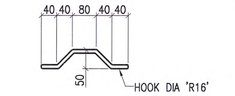

HOOK DETAILS PRECAST COVER (TYPE-II)

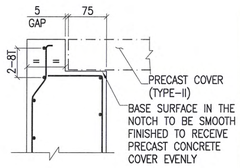

DETAIL D

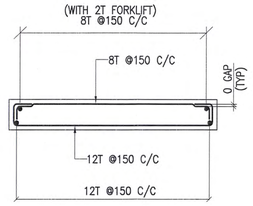

SECTION 5-5

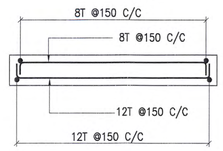

SECTION 6-6

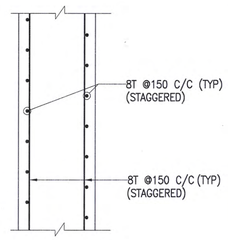

SECTION 7-7

TYPICAL CROSS SECTION OF WALL

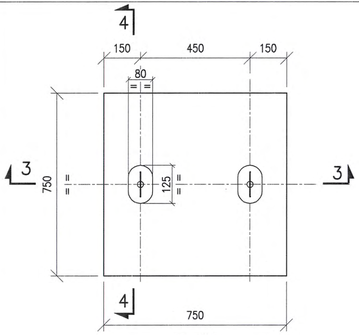

PLAN PRECAST COVER(TYPE-I)
(SELF WEIGHT OF PRECAST COVER = 113kg)

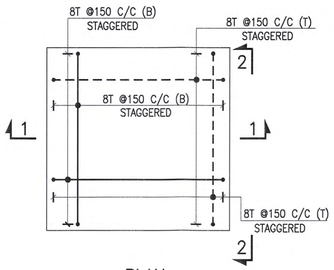

PLAN REINFORCEMENT (TYPE-I)

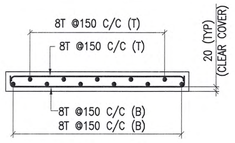

SECTION 1-1

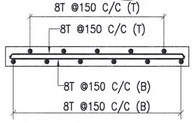

SECTION 2-2

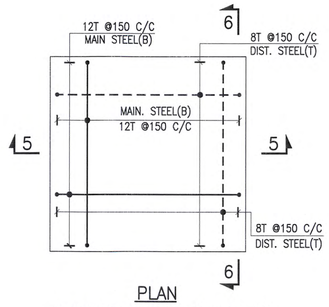

PLAN REINFORCEMENT (TYPE-II)

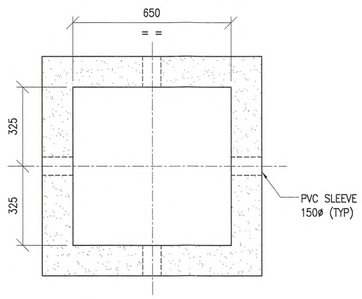

SECTION 8-8

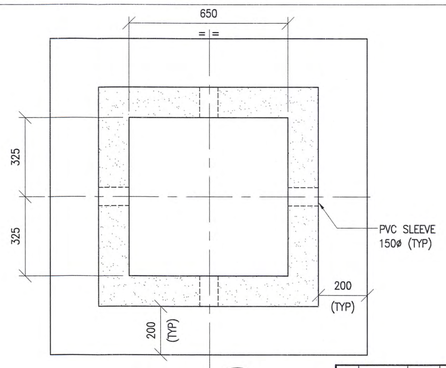

SECTION 9-9

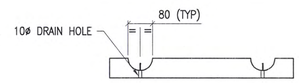

SECTION 3-3

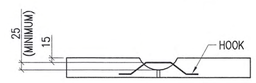

SECTION 4-4

Rev.	Date	Drawn/Prepared Name		Checked Date	Checked Name	Approved Date	Approved Name	Description	Acc. Code
00	3/12/15	RLP	ADY	3/12/15	PPS	3/12/15	RSD	ISSUED AS STANDARD	

BASED ON PIN-LEP-CVC-1013_Rev.00

Category Codes (Submission purpose)
- TKIS - India / Owner/Client
- ☐ 1 For Approval
- ☐ 2 For Review / Comments
- ☐ 3 For Information
- ☐ 4 For Engineering
- ☐ 5 For Enquiry
- ☐ 6 For Order Placement
- ☐ 7 Final & Approved
- ☐ 8 Released for Construction

Acceptance Codes (Approval Codes)
- TKIS - India / Owner/Client
- ☐ 1 Approved
- ☐ 2 Approved for Manufacturing/ Fabrication With Comments as Marked
- ☐ 3 Not Approved/Resubmit
- ☐ 4 Retained for Information/Records
- ☐ 5 Reviewed
- ☐ 6 Reviewed as Noted/Resubmit

Date : __/__/____ Name : _____

Contract No.	Code: Document ID	Part	Rev.
	PIN-LEP-CVC-1013		00

Store Location: Server/Share: \\KUMUS671\REFER\CIVIL\
Store Location: Folder: VOLUME-6
Store Name: PIN-LEP-CVC-1013_00.dwg
BAR-Code

Pro. Unit	Con. Unit	TON	Group	Order No.	Type of Document	Sheet

ThyssenKrupp Industrial Solutions (India)

© Copyright 2015 : All rights reserved ThyssenKrupp Industrial Solutions (India) Private Limited

	Date	Name
Drawn	3/12/15	RLP
Prepared	3/12/15	ADY
Checked	3/12/15	PPS
Approved	3/12/15	RSD

Description: STANDARD DETAILS OF EARTH PIT CHAMBER

Scale 1:50 | Cat. Code | Acc. Code | Status

ISO A1 — 50 mm — 14

INSTALLATION DETAIL-LIGHTING

LIST OF INSTALLATION STANDARDS

Sr. No.	Description	Typical No.	No. of Sheets	Rev
1	AVIATION LIGHT FIXTURE MOUNTED ON BRACKET, ON CONCRETE/ BRICK WALL	LAVC1	1	0
2	AVIATION LIGHT FIXTURE ON POLE ON STRUCTURAL STEEL RAILING	LAVR1	1	0
3	CONTROL GEAR BOX/JUNCTION BOX MOUNTED ON CONCRETE WALL/COLUMN	LCGC1	1	0
4	CONTROL GEAR BOX/JUNCTION BOX MOUNTED ON POLE/HANDRAIL	LCGR1	1	0
5	CONTROL GEAR BOX/JUNCTION BOX MOUNTED ON STEEL COLUMN	LCGS1	1	0
6	EXIT SIGN FIXTURE ON CONCRETE/BRICK WALL: TYPE 1	LESC1	1	0
7	EXIT SIGN FIXTURE ON CONCRETE/BRICK WALL: TYPE 2	LESC2	1	0
8	EXIT SIGN FIXTURE ON CEILING/SIDE OF CONCRETE COLUMN	LESC3	1	0
9	EXIT SIGN FIXTURE ON STEEL BEAM/COLUMN	LESS1	1	0
10	DECORATIVE TYPE EXIT SIGN FIXTURE AT FALSE CEILING/RECESS MOUNTED	LESZ1	1	0
11	DECORATIVE TYPE EXIT SIGN FIXTURE ON GYPSUM/BRICK WALL	LESZ2	1	0
12	FLOOD LIGHT FIXTURE ON BRACKET,ON CONCRETE CEILING/BEAM	LFDC1	1	0
13	FLOOD LIGHT FIXTURE ON BRACKET,ON CONCRETE WALL/COLUMN	LFDC2	1	0
14	FLOOD LIGHT FIXTURE ON POLE AT GROUND LEVEL	LFDP1	1	0
15	FLOOD LIGHT FIXTURE ON POLE,ON STRUCTURAL STEEL RAILING	LFDR1	1	0
16	FLOOD LIGHT FIXTURE ON BRACKET,ON STRUCTURAL STEEL COLUMN	LFDS1	1	0
17	FLOOD LIGHT FIXTURE ON BRACKET,ON STRUCTURAL STEEL BEAM	LFDS2	1	0
18	FLUORESCENT/LED LIGHTING FIXTURE MOUNTED ON CONCRETE CEILING	LFLC1	1	0
19	FLUORESCENT/LED LIGHTING FIXTURE SUSPENDED FROM CONCRETE CEILING	LFLC2	1	0
20	FLUORESCENT/LED LIGHTING FIXTURE ON POLE BRACKET ON WALL/COLUMN	LFLC3	1	0
21	FLUORESCENT/LED LIGHTING FIXTURE MOUNTED ON CONCRETE WALL/COLUMN	LFLC4	1	0
22	FLUORESCENT/LED LIGHTING FIXTURE RECESSED IN FALSE CEILING	LFLF1	1	0
23	FLUORESCENT/LED LIGHTING FIXTURE (SQUARE TILE) RECESSED IN FALSE CEILING	LFLF2	1	0
24	FLUORESCENT/LED LIGHTING FIXTURE FOR CELLRACK ILLUMINATION	LFLK1	1	0
25	FLUORESCENT/LED LIGHTING FIXTURE ON POLE ON STRUCTURAL STEEL RAILING	LFLR1	1	0
26	FLUORESCENT/LED LIGHTING FIXTURE MOUNTED UNDER STEEL CEILING	LFLS1	1	0
27	FLUORESCENT/LED LIGHTING FIXTURE SUSPENDED FROM STEEL CEILING	LFLS2	1	0
28	FLUORESCENT/LED LIGHTING FIXTURE ON POLE BRACKET ON STEEL COLUMN	LFLS3	1	0
29	FLUORESCENT/LED LIGHTING FIXTURE SUPPORTED FROM CABLE TRAY	LFLT1	1	0
30	HIGH/MEDIUM/LOW BAY FIXTURE ON BRACKET, ON CONCRETE CEILING	LHBC1	1	0
31	HIGH/MEDIUM/LOW BAY FIXTURE ON BRACKET, ON STRUCTURAL STEEL BEAM	LHBS1	1	0

Sr. No.	Description	Typical No.	No. of Sheets	Rev
32	STREET LIGHTING FIXTURE ON CONCRETE COLUMN/WALL	LSTC1	1	0
33	STREET LIGHTING FIXTURE ON STREET LIGHT POLE	LSTP1	1	0
34	STREET LIGHTING FIXTURE ON STRUCTURAL STEEL COLUMN	LSTS1	1	0
35	WELL GLASS FIXTURE ON BRACKET, ON CONCRETE WALL/COLUMN	LWGC1	1	0
36	WELL GLASS FIXTURE ON BRACKET, ON CONCRETE CEILING	LWGC2	1	0
37	WELL GLASS FIXTURE ON LONG BRACKET, ON CONCRETE CEILING	LWGC3	1	0
38	WELL GLASS FIXTURE ON POLE ON CONCRETE FLOOR	LWGP1	1	0
39	WELL GLASS FIXTURE ON POLE ON STRUCTURE STEEL RAILING	LWGR1	1	0
40	WELL GLASS FIXTURE ON BRACKET, ON STRUCTURAL COLUMN	LWGS1	1	0
41	WELL GLASS FIXTURE ON SHORT BRACKET, ON STRUCTURAL STEEL BEAM	LWGS2	1	0
42	WELL GLASS FIXTURE ON LONG BRACKET, ON STRUCTURAL STEEL BEAM	LWGS3	1	0
43	SWITCH SOCKET ON CONCRETE COLUMN/BRICK WALL	LSSC1	1	0
44	SWICTH SOCKET ON SLEF-STANDING PEDESTAL	LSSP1	1	0
45	SWITCH SOCKET ON STEEL PLATFORM/GRATING	LSSP2	1	0
46	SWITCH SOCKET ON RAILING	LSSR1	1	0
47	SWITCH SOCKET ON STEEL STRUCTURE	LSSS1	1	0
48	JUNCTION BOX ON WALL/CONCRETE COLUMN: TYPE 1	LJBC1	1	0
49	JUNCTION BOX ON WALL/CONCRETE COLUMN: TYPE 2	LJBC2	1	0
50	JUNCTION BOX ON RAILING	LJBR1	1	0
51	JUNCTION BOX ON STEEL STRUCTURE	LJBS1	1	0

1. General:

a. The documents/drawings as indicated below shall be prepared by the LSTK Contractor as a part of detail Engineering.

b. These notes shall be read and construed in conjunction with Lighting layout drawings and Installation Standards - Lighting.

2. Installation of Light Fixtures:

a. Light fixtures shall be mounted as per mounting type indicated in the layout drawing and as detailed in installation standard. Fabrication of supports for fixtures shall be done as per installation standard. Where insert plates are not provided, contractor shall provide the same using anchor fasteners.

b. Installation of light fixtures includes assembly of accessories of light fixture and internal wiring, if supplied loose, and installation of control gear boxes for non-integral type fixtures.

c. Before installation of light fixtures, Inspection of internal assembly of light fixture shall be done by contractor as per manufacturer's instructions.

d. Clearance for installation of light fixtures and their supports shall be obtained from electrical site engineer before commencement of the work.

e. The control gear boxes for non-integral fixtures shall be grouped and installed at accessible location as close to the fixture as possible, if not already indicated in layout.

f. SLDBs, JBs, Control gear boxes, Single phase switch socket outlets etc. shall be mounted at 1.2 meter elevation measured from finished floor level to the bottom of the equipment unless otherwise specified.

g. In some Installation types bottom elevation of every fixture is indicated in the Installation Standards – Lighting. In case the same is not included in the Installation standards or is different, then the bottom elevation of the fixture (from FFL) is included in the layout drawing.

h. Lamps shall be installed after installation of light fixtures and completion of circuit cabling.

i. Installation of supports for lighting fixtures, sockets, junction boxes, etc. shall be completed prior to fireproofing on steel beam/ column wherever applicable.

j. For fire proofed structures, the bracket of light fittings shall be suitably decided such that fixture lies outside fire proofed column.

k. Symbols shown in broken lines represent equipment installed below platforms/ under steel.

3. Laying of Lighting cable:

a. All looping cables for lighting and sockets shall be routed in LV cable trays wherever available. Otherwise looping cables with multiple runs (>3) shall preferably be routed in 50/ 100/ 150 width perforated cable trays with prior consultation of Engineer-In-Charge. Single or double looping cables shall preferably be cleated on wall/ steel structure using GI spacers (min. 3 mm thick) and saddles (min. 2.5 mm thick) at every interval of 300 mm.

b. Lighting cable shall be laid through hume pipe at the road crossing. Cables crossing storm water drain, shall be laid 300 mm below drain, in hume pipe.

4. Street Lighting:

a. The cabling from street lighting distribution board to street lighting JB on pole shall be carried out with 4C (armoured) cable buried underground and wiring from JB on street lighting pole to light fixture shall be carried out with 3C flexible (unarmoured) cable.

b. Junction box on street lighting pole shall be earthed along with pole at two distinct points.

c. Street lighting cable shall be laid along the road 750 mm (min) below ground.

d. In general the street light pole foundations are designed and constructed by civil group. Alternatively the same could be Electrical contractor's scope as defined in the project specific Installation standard. Based on the project specific Installation standard, concrete grade & reinforcement details for the street lighting pole foundation shall be provided by erection contractor for approval after consultation with the pole vendor.

5. <u>Miscellaneous:</u>

a. After the lighting installation is completed, load on individual circuits shall be checked and further balancing of load if required shall be done as per the instructions of Engineer-In-Charge. The details of the same shall be indicated on all the corresponding as-built drawings.

ITEM	DESCRIPTION	MATERIAL	QTY.	SUPPLY BY	INSTALLATION BY
1	AVIATION LIGHTING FIXTURE	–	1 NO.	CLIENT	ELECTRICAL CONTRACTOR
2	ISMC 75	M.S. PAINTED	AS REQUIRED	REFER NOTE–3 & 4	
3	HEXAGONAL HEAD BOLT M10 X 30mm LONG, THREADS UPTO HEAD, WITH NUTS & WASHERS SUITABLE FOR CONNECTIONS SHOWN IN THIS DRAWING	H.D.G.I.	3 SETS	ELECTRICAL CONTRACTOR	ELECTRICAL CONTRACTOR
4	HEXAGONAL HEAD BOLT M10 X 30mm LONG, THREADS UPTO HEAD, WITH NUTS & WASHERS SUITABLE FOR ORDERED LIGHTING FIXTURE (REFER NOTE–3)	H.D.G.I.	2 SETS	ELECTRICAL CONTRACTOR	ELECTRICAL CONTRACTOR
5	M10 x 75mm LONG ANCHOR FASTENER, WITH SUITABLE NUT & WASHERS	GALVANISED STEEL/SS	2 SETS	ELECTRICAL CONTRACTOR	ELECTRICAL CONTRACTOR

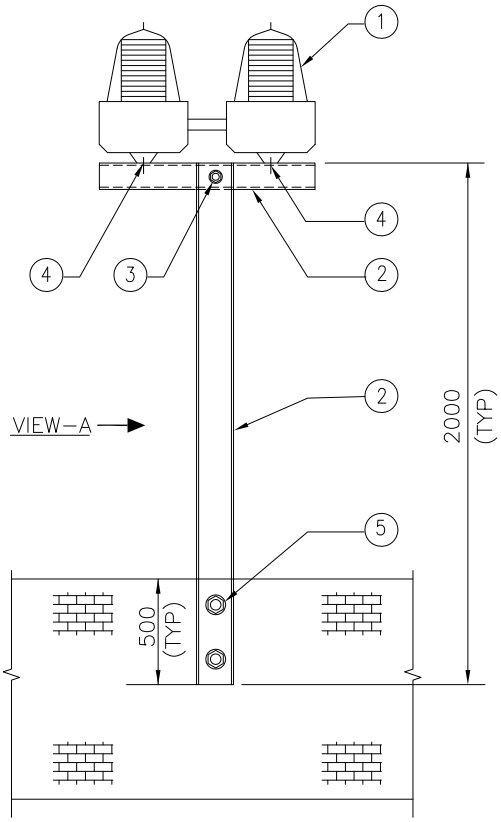

FRONT VIEW

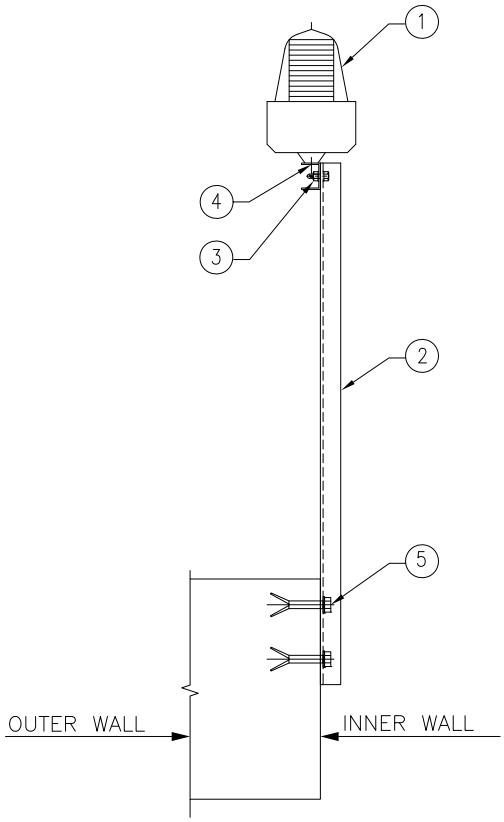

VIEW–A

DRAWING NOT TO SCALE

NOTES:–

1) ALL DIMENSION ARE IN 'mm' UNLESS OTHERWISE SPECIFIED.
2) THE SUPPORT SHALL BE PREFABRICATED AND PAINTED BEFORE INSTALLATION.
3) THE DETAILS (SIZE AND DIMENSIONS) SHALL BE VERIFIED WITH ORDERED LIGHTING FIXTURE.
4) SUPPLY & INSTALLATION OF STEEL IS NOT PART OF THIS INSTALLATION ARRANGEMENT. SAME IS COVERED ELSEWHERE.

Code	Contract No.	Document ID	Part	Rev.
		PIN–LEP–ELT–4003		00

Rev.	Date	Name (Drawn/Prepared)		Date	Name (Checked)		Date	Name (Approved)		Description	Acc. Code	Cat. Code	Acc. Code	Status
00	01/08/16	RDK	ANK	01/08/16	RPM		01/08/16	RPM		ISSUED AS STANDARD				

BAR–Code

Store Location: Server/Share

Store Location: Folder

Store Name LAVC1

Pro. Unit	TON	Group	Type of Document	Sheet
				1 / 1

Con. Unit	Scale	Order No.
	NTS	

thyssenkrupp

	Date	Name
Drawn	01/08/16	RDK
Prepared	01/08/16	ANK
Checked	01/08/16	RPM
Approved	01/08/16	RPM

Description
INSTALLATION STANDARDS – LIGHTING AVIATION LIGHT FIXTURE ON BRACKET, ON CONCRETE/ BRICK WALL (LAVC1)

ISO A4

UH_BO_ISO_A4_P_E_tktSIndia.dwg / AG03_UH_BO_ISO_A4_P.dwg / 14.12.2016

© thyssenkrupp Industrial Solutions (India) Private Limited 2017. All rights reserved

UH_BO_ISO_A4_P_E_tktSIndia.dwg / AG03_UH_BO_ISO_A4_P.dwg / 14.12.2016

ITEM	DESCRIPTION	MATERIAL	QTY.	SUPPLY BY	INSTALLATION BY
1	AVIATION LIGHTING FIXTURE	–	1 NO.	CLIENT	ELECTRICAL CONTRACTOR
2	ISMC 75	M.S. PAINTED	AS REQUIRED	REFER NOTE–3 & 4	
3	HEXAGONAL HEAD BOLT M10 X 30mm LONG, THREADS UPTO HEAD, WITH NUTS & WASHERS SUITABLE FOR CONNECTIONS SHOWN IN THIS DRAWING	H.D.G.I.	3 SETS	ELECTRICAL CONTRACTOR	ELECTRICAL CONTRACTOR
4	HEXAGONAL HEAD BOLT M10 X 30mm LONG, THREADS UPTO HEAD, WITH NUTS & WASHERS SUITABLE FOR ORDERED LIGHTING FIXTURE (REFER NOTE–3)	H.D.G.I.	2 SETS	ELECTRICAL CONTRACTOR	ELECTRICAL CONTRACTOR
5	U BOLT M10 SIZE THREADED AT THE END SUITABLE FOR POLE / HANDRAIL WITH NUT & WASHERS.	H.D.G.I.	2 SETS	ELECTRICAL CONTRACTOR	ELECTRICAL CONTRACTOR

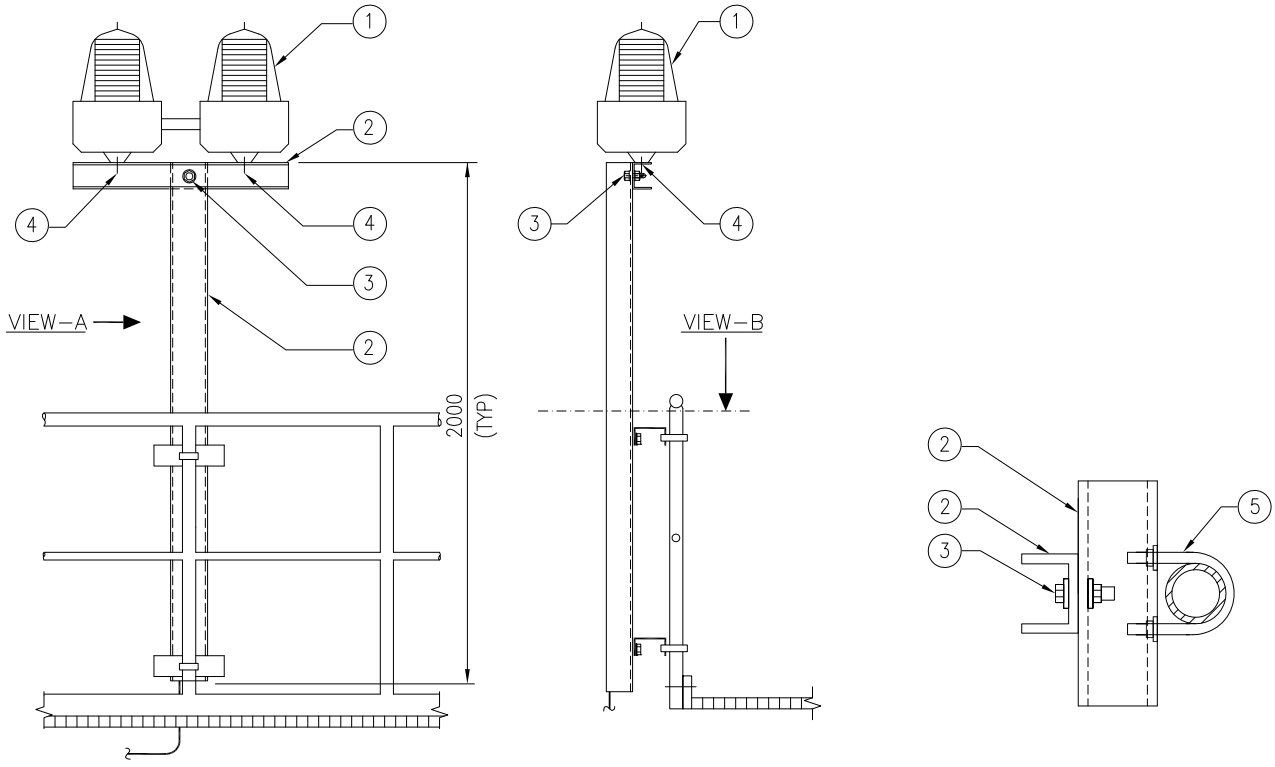

DRAWING NOT TO SCALE

NOTES:–

1) ALL DIMENSION ARE IN 'mm' UNLESS OTHERWISE SPECIFIED.
2) THE SUPPORT SHALL BE PREFABRICATED AND PAINTED BEFORE INSTALLATION.
3) THE DETAILS (SIZE AND DIMENSIONS) SHALL BE VERIFIED WITH ORDERED LIGHTING FIXTURE.
4) SUPPLY & INSTALLATION OF STEEL IS NOT PART OF THIS INSTALLATION ARRANGEMENT. SAME IS COVERED ELSEWHERE.

Code	Contract No.	Document ID	Part	Rev.
		PIN–LEP–ELT–4003		00

Rev.	Date	Name (Drawn/Prepared)	Date	Name (Checked)	Date	Name (Approved)	Description	Acc. Code	Cat. Code	Acc. Code	Status
00	01/08/16	RDK	01/08/16	RPM	01/08/16	RPM	ISSUED AS STANDARD				

BAR–Code

Store Location: Server/Share

Store Location: Folder

Store Name LAVR1

Pro. Unit	TON	Group	Type of Document	Sheet
				1 / 1

Con. Unit	Scale	Order No.
	NTS	

thyssenkrupp

	Date	Name
Drawn	01/08/16	RDK
Prepared	01/08/16	ANK
Checked	01/08/16	RPM
Approved	01/08/16	RPM

Description
INSTALLATION STANDARDS – LIGHTING AVIATION LIGHTING FIXTURE ON POLE ON STRUCTURAL STEEL RAILING (LAVR1)

ISO A4

© thyssenkrupp Industrial Solutions (India) Private Limited 2017. All rights reserved

ITEM	DESCRIPTION	MATERIAL	QTY.	SUPPLY BY	INSTALLATION BY
1	CONTROL GEAR BOX	PROJECT SPECIFIC	AS PER LAYOUT	CLIENT	ELECTRICAL CONTRACTOR
2	ISMC 75	M.S. PAINTED	AS REQUIRED	REFER NOTE-3 & 4	
3	HEXAGONAL HEAD BOLT M10 X 30mm LONG, THREADS UPTO HEAD, WITH NUTS & WASHERS SUITABLE FOR CONNECTIONS SHOWN IN THIS DRAWING (REFER NOTE-3)	H.D.G.I.	4 SETS	ELECTRICAL CONTRACTOR	ELECTRICAL CONTRACTOR
4	M8 x 60mm LONG ANCHOR FASTENER, WITH SUITABLE NUT & WASHERS	GALVANISED STEEL/SS	4 SETS	ELECTRICAL CONTRACTOR	ELECTRICAL CONTRACTOR

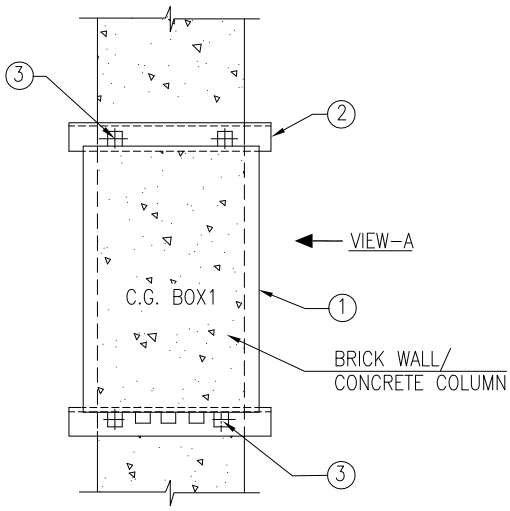

FRONT VIEW

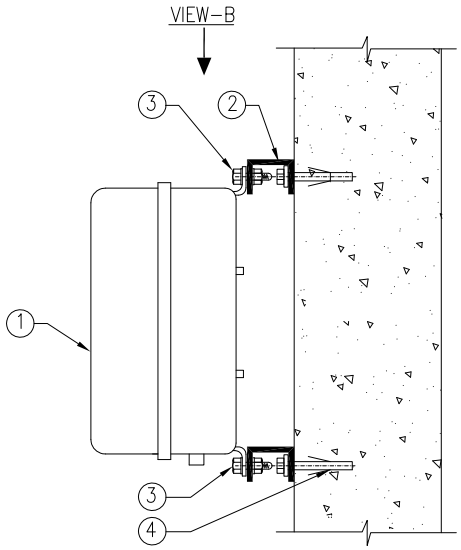

VIEW-A

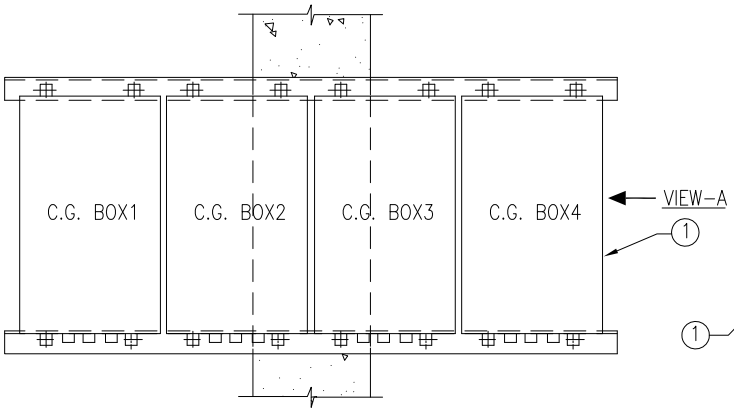

FRONT VIEW FOR MULTIPLE C.G. BOXES

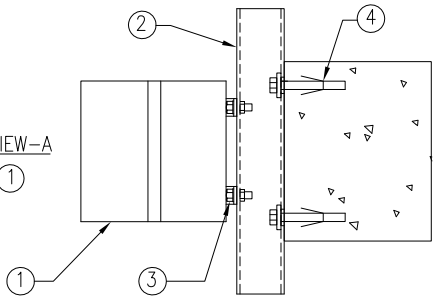

VIEW-B

DRAWING NOT TO SCALE

NOTES:-

1) ALL DIMENSION ARE IN 'mm' UNLESS OTHERWISE SPECIFIED.
2) THE SUPPORT SHALL BE PREFABRICATED AND PAINTED BEFORE INSTALLATION.
3) THE DETAILS (SIZE AND DIMENSIONS) SHALL BE VERIFIED WITH ORDERED C.G. BOX.
4) SUPPLY & INSTALLATION OF STEEL IS NOT PART OF THIS INSTALLATION ARRANGEMENT. SAME IS COVERED ELSEWHERE.

Code	Contract No.	Document ID	Part	Rev.
		PIN-LEP-ELT-4003		00

Rev.	Date	Name (Drawn/Prepared)		Date	Name (Checked)		Date	Name (Approved)		Description	Acc. Code	Cat. Code	Acc. Code	Status
00	01/08/16	RDK	ANK	01/08/16	RPM		01/08/16	RPM		ISSUED AS STANDARD				

BAR-Code

Store Location: Server/Share

Store Location: Folder

Store Name LCGC1

Pro. Unit	TON	Group	Type of Document	Sheet
				1 / 1

Con. Unit	Scale	Order No.
	NTS	

thyssenkrupp

	Date	Name
Drawn	01/08/16	RDK
Prepared	01/08/16	ANK
Checked	01/08/16	RPM
Approved	01/08/16	RPM

Description

INSTALLATION STANDARDS – LIGHTING CONTROL GEAR BOX MOUNTED ON BRICK WALL/CONCRTE COLUMN (LCGC1)

ISO A4

UH_BO_ISO_A4_P_E_tktSIndia.dwg / AG03_UH_BO_ISO_A4_P.dwg / 14.12.2016

© thyssenkrupp Industrial Solutions (India) Private Limited 2017. All rights reserved

ITEM	DESCRIPTION	MATERIAL	QTY.	SUPPLY BY	INSTALLATION BY
1	CONTROL GEAR BOX	PROJECT SPECIFIC	1 NO.	CLIENT	ELECTRICAL CONTRACTOR
2	ISMC 75	M.S. PAINTED	AS REQUIRED	REFER NOTE-3 & 4	
3	HEXAGONAL HEAD BOLT M10 X 30mm LONG, THREADS UPTO HEAD, WITH NUTS & WASHERS SUITABLE FOR CONNECTIONS SHOWN IN THIS DRAWING (REFER NOTE-3)	H.D.G.I.	4 SETS	ELECTRICAL CONTRACTOR	ELECTRICAL CONTRACTOR
4	U BOLT M10 SIZE THREADED AT THE END SUITABLE FOR POLE / HANDRAIL WITH NUT & WASHERS.	H.D.G.I.	2 SETS	ELECTRICAL CONTRACTOR	ELECTRICAL CONTRACTOR

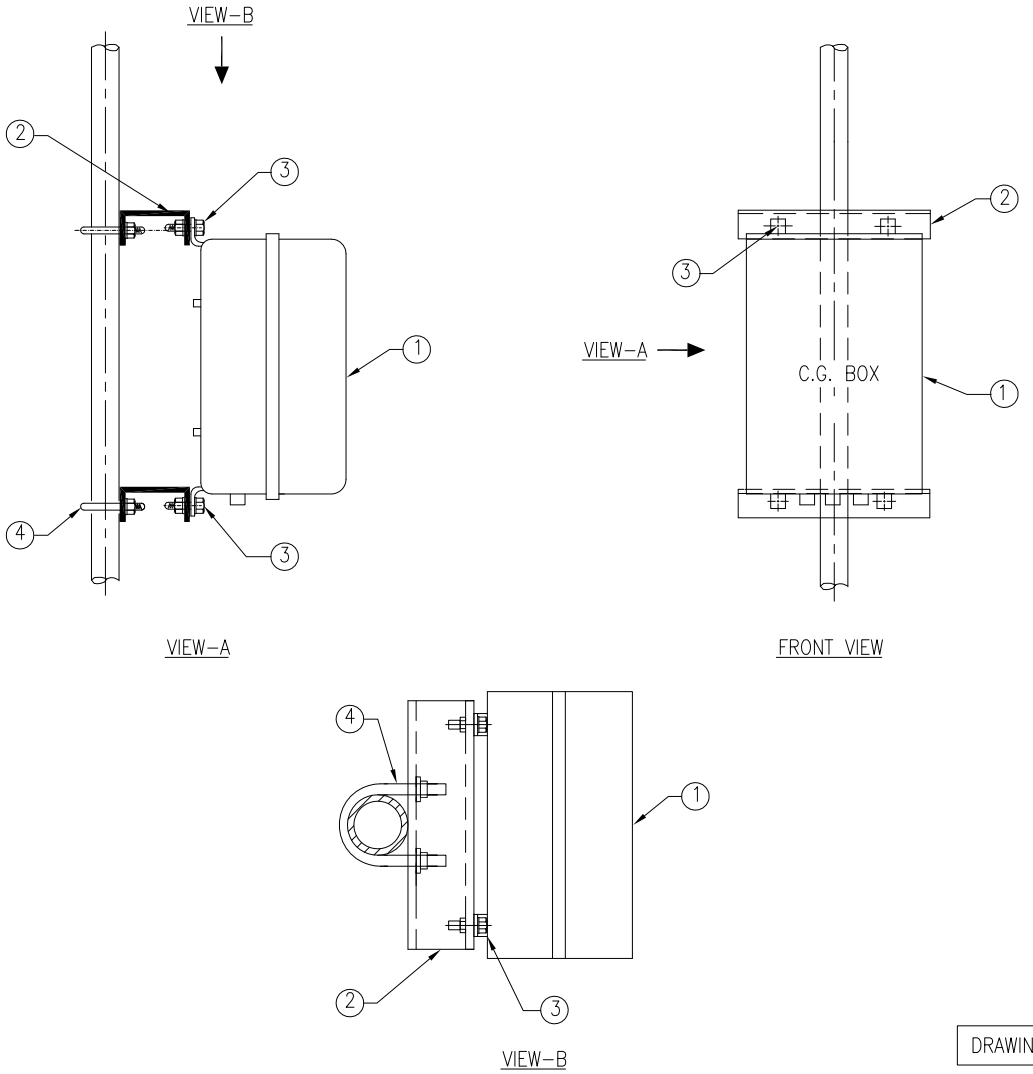

DRAWING NOT TO SCALE

NOTES:-

1) ALL DIMENSION ARE IN 'mm' UNLESS OTHERWISE SPECIFIED.
2) THE SUPPORT SHALL BE PREFABRICATED AND PAINTED BEFORE INSTALLATION. AREA AFFECTED DUE TO SITE WELDING SHALL BE CLEANED AND PAINTED.
3) THE DETAILS (SIZE AND DIMENSIONS) SHALL BE VERIFIED WITH ORDERED C.G. BOX.
4) SUPPLY & INSTALLATION OF STEEL IS NOT PART OF THIS INSTALLATION ARRANGEMENT. SAME IS COVERED ELSEWHERE.

Code	Contract No.	Document ID	Part	Rev.
		PIN-LEP-ELT-4003		00

Rev.	Date	Name (Drawn/Prepared)		Date	Name (Checked)		Date	Name (Approved)		Description	Acc. Code	Cat. Code	Acc. Code	Status
00	01/08/16	RDK	ANK	01/08/16	RPM		01/08/16	RPM		ISSUED AS STANDARD				

BAR-Code

Store Location: Server/Share

Store Location: Folder

Store Name LCGR1

Pro. Unit	TON	Group	Type of Document	Sheet
				1 / 1

Con. Unit	Scale	Order No.
	NTS	

thyssenkrupp

	Date	Name
Drawn	01/08/16	RDK
Prepared	01/08/16	ANK
Checked	01/08/16	RPM
Approved	01/08/16	RPM

Description
INSTALLATION STANDARDS – LIGHTING CONTROL GEAR BOX MOUNTED ON POLE/HANDRAIL (LCGR1)

ISO A4

UH_BO_ISO_A4_P_E_tktSIndia.dwg / AG03_UH_BO_ISO_A4_P.dwg / 14.12.2016

© thyssenkrupp Industrial Solutions (India) Private Limited 2017. All rights reserved

UH_BO_ISO_A4_P_E_tktSIndia.dwg / AG03_UH_BO_ISO_A4_P.dwg / 14.12.2016

ITEM	DESCRIPTION	MATERIAL	QTY.	SUPPLY BY	INSTALLATION BY
1	CONTROL GEAR BOX	PROJECT SPECIFIC	AS PER LAYOUT	CLIENT	ELECTRICAL CONTRACTOR
2	ISMC 75	M.S. PAINTED	AS REQUIRED	REFER NOTE-3 & 4	
3	HEXAGONAL HEAD BOLT M10 X 30mm LONG, THREADS UPTO HEAD, WITH NUTS & WASHERS SUITABLE FOR CONNECTIONS SHOWN IN THIS DRAWING (REFER NOTE-3)	H.D.G.I.	4 SETS	ELECTRICAL CONTRACTOR	ELECTRICAL CONTRACTOR

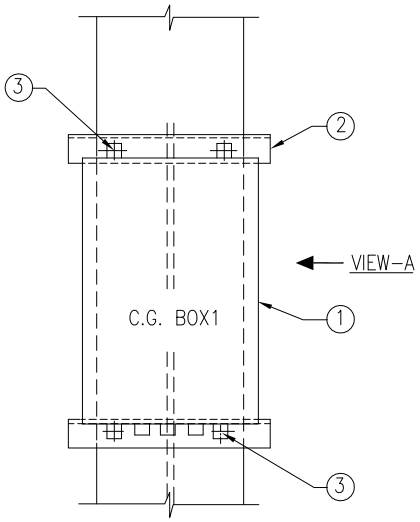

FRONT VIEW

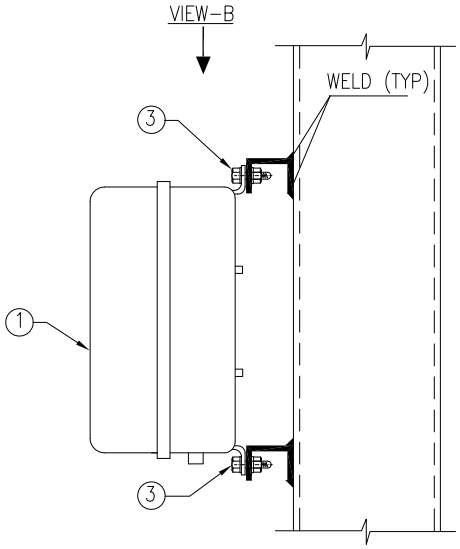

VIEW-A

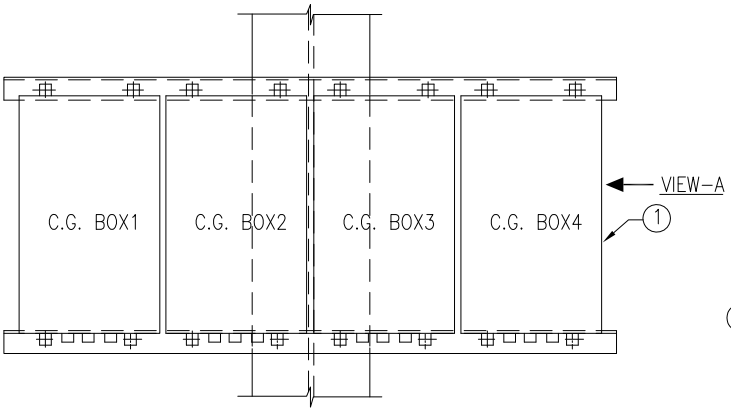

FRONT VIEW FOR MULTIPLE C.G. BOXES

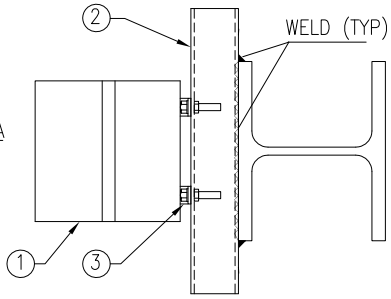

VIEW-B

NOTES:-

DRAWING NOT TO SCALE

1) ALL DIMENSION ARE IN 'mm' UNLESS OTHERWISE SPECIFIED.
2) THE SUPPORT SHALL BE PREFABRICATED AND PAINTED BEFORE INSTALLATION. AREA AFFECTED DUE TO SITE WELDING SHALL BE CLEANED AND PAINTED.
3) THE DETAILS (SIZE AND DIMENSIONS) SHALL BE VERIFIED WITH ORDERED C.G. BOX.
4) SUPPLY & INSTALLATION OF STEEL IS NOT PART OF THIS INSTALLATION ARRANGEMENT. SAME IS COVERED ELSEWHERE.

Code	Contract No.	Document ID	Part	Rev.
		PIN-LEP-ELT-4003		00

Rev.	Date	Name (Drawn/Prepared)	Date	Name (Checked)	Date	Name (Approved)	Description	Acc. Code	Cat. Code	Acc. Code	Status
00	01/08/16	RDK ANK	01/08/16	RPM	01/08/16	RPM	ISSUED AS STANDARD				

BAR-Code

Store Location: Server/Share

Store Location: Folder

Store Name LCGS1

Pro. Unit	TON	Group	Type of Document	Sheet
				1 / 1

Con. Unit	Scale	Order No.
	NTS	

thyssenkrupp

	Date	Name
Drawn	01/08/16	RDK
Prepared	01/08/16	ANK
Checked	01/08/16	RPM
Approved	01/08/16	RPM

Description
INSTALLATION STANDARDS – LIGHTING CONTROL GEAR BOX MOUNTED ON STEEL COLUMN (LCGS1)

ISO A4

© thyssenkrupp Industrial Solutions (India) Private Limited 2017. All rights reserved

ITEM	DESCRIPTION	MATERIAL	QTY.	SUPPLY BY	INSTALLATION BY
1	EXIT SIGN FIXTURE	–	1 NO.	CLIENT	ELECTRICAL CONTRACTOR
2	ACCESSORIES TO FIX EXIT SIGN FIXTURE SUCH AS PLASTIC ANCHORS, M10 X 30 HDGI SCREWS ETC. (REFER NOTE–2)	–	4 SETS	ELECTRICAL CONTRACTOR	ELECTRICAL CONTRACTOR

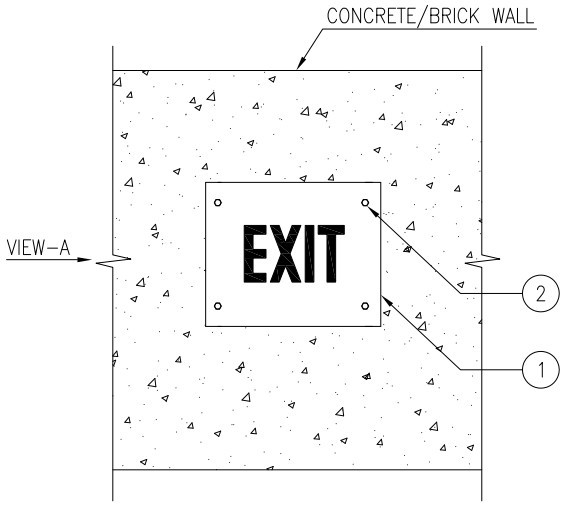

FRONT VIEW

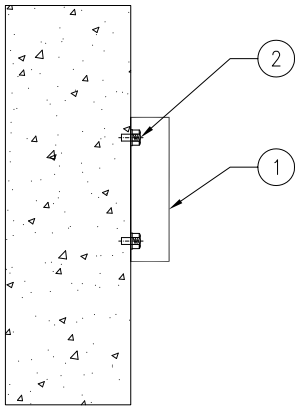

VIEW–A

DRAWING NOT TO SCALE

NOTES
1) ALL DIMENSION ARE IN 'mm' UNLESS OTHERWISE STATED.
2) THESE DETAILS SHALL BE VERIFIED WITH ORDERED LIGHTING FIXTURE.

Code	Contract No.	Document ID	Part	Rev.
		PIN–LEP–ELT–4003		00

Rev.	Date	Name (Drawn/Prepared)	Date	Name (Checked)	Date	Name (Approved)	Description	Acc. Code	Cat. Code	Acc. Code	Status
00	01.08.2017	KRP	01.08.2017	MLD	01.08.2017	RPM	01.08.2017	RPM	ISSUED AS STANDARD				

BAR–Code

Store Location: Server/Share
Store Location: Folder
Store Name LESC1

Pro. Unit	TON	Group	Type of Document	Sheet
				1 / 1

Con. Unit	Scale	Order No.
	NTS	

thyssenkrupp

	Date	Name
Drawn	01.08.2017	KRP
Prepared	01.08.2017	MLD
Checked	01.08.2017	RPM
Approved	01.08.2017	RPM

Description
INSTALLATION STANDARDS – LIGHTING EXIT SIGN FIXTURE ON CONCRETE/BRICK WALL: TYPE–1 (LESC1)

ISO A4

UH_BO_ISO_A4_P_E_tktSIndia.dwg / AG03_UH_BO_ISO_A4_P.dwg / 14.12.2016

© thyssenkrupp Industrial Solutions (India) Private Limited 2017. All rights reserved

ITEM	DESCRIPTION	MATERIAL	QTY.	SUPPLY BY	INSTALLATION BY
1	EXIT SIGN FIXTURE	–	1 NO.	CLIENT	ELECTRICAL CONTRACTOR
2	HEXAGONAL HEAD BOLT M10 X 30mm LONG, THREADS UPTO HEAD, WITH SUITABLE NUTS & WASHERS (REFER NOTE–3)	H.D.G.I.	4 SETS	ELECTRICAL CONTRACTOR	ELECTRICAL CONTRACTOR
3	ISMC 75	M.S. PAINTED	AS REQUIRED	(REFER NOTE–3 & 4)	
4	ANCHOR FASTENER M8 x 60mm LONG WITH SUITABLE NUT & WASHER	GALVANISED STEEL / SS	2 SETS	ELECTRICAL CONTRACTOR	ELECTRICAL CONTRACTOR

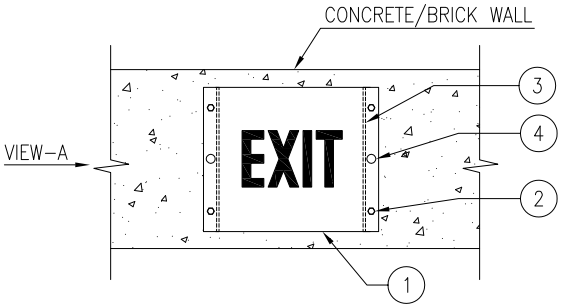

FRONT VIEW

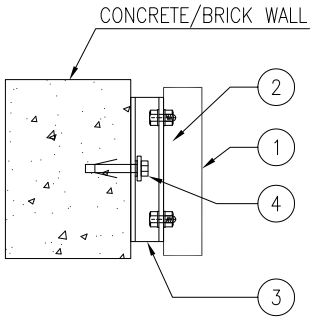

VIEW–A

DRAWING NOT TO SCALE

NOTES

1) ALL DIMENSION ARE IN 'mm' UNLESS OTHERWISE STATED.
2) STEEL SECTIONS SHALL BE PREFABRICATED & PAINTED BEFORE INSTALLATION.
3) THESE DETAILS SHALL BE VERIFIED WITH ORDERED LIGHTING FIXTURE.
4) SUPPLY & INSTALLATION OF STEEL IS NOT PART OF THIS INSTALLATION ARRANGEMENT. SAME IS COVERED ELSEWHERE.

Code	Contract No.	Document ID	Part	Rev.
		PIN–LEP–ELT–4003		00

Rev.	Date	Name (Drawn/Prepared)		Date	Name (Checked)		Date	Name (Approved)	Description	Acc. Code	Cat. Code	Acc. Code	Status
00	01.08.2017	KRP	MLD	01.08.2017	RPM		01.08.2017	RPM	ISSUED AS STANDARD				

BAR–Code

Store Location: Server/Share

Store Location: Folder

Store Name LESC2

Pro. Unit	TON	Group	Type of Document	Sheet
				1 / 1

Con. Unit	Scale	Order No.
	NTS	

thyssenkrupp

	Date	Name
Drawn	01.08.2017	KRP
Prepared	01.08.2017	MLD
Checked	01.08.2017	RPM
Approved	01.08.2017	RPM

Description
INSTALLATION STANDARDS – LIGHTING EXIT SIGN FIXTURE ON CONCRETE/BRICK WALL: TYPE 2 (LESC2)

ISO A4

UH_BO_ISO_A4_P_E_tktSIndia.dwg / AG03_UH_BO_ISO_A4_P.dwg / 14.12.2016

© thyssenkrupp Industrial Solutions (India) Private Limited 2017. All rights reserved

ITEM	DESCRIPTION	MATERIAL	QTY.	SUPPLY BY	INSTALLATION BY
1	EXIT SIGN FIXTURE	–	1 NO.	CLIENT	ELECTRICAL CONTRACTOR
2	HEXAGONAL HEAD BOLT M10 X 30mm LONG, THREADS UPTO HEAD, WITH SUITABLE NUTS & WASHERS (REFER NOTE–3)	H.D.G.I.	4 SETS	ELECTRICAL CONTRACTOR	ELECTRICAL CONTRACTOR
3	ISA 50 (50x50x6)	M.S. PAINTED	AS REQUIRED	(REFER NOTE–3 & 4)	
4	ANCHOR FASTENER M8 x 60mm LONG WITH SUITABLE NUT & WASHER	GALVANISED STEEL / SS	2 SETS	ELECTRICAL CONTRACTOR	ELECTRICAL CONTRACTOR
5	250 x 100 X 10mm THK PLATE	M.S. PAINTED	1 NO.	(REFER NOTE–4)	

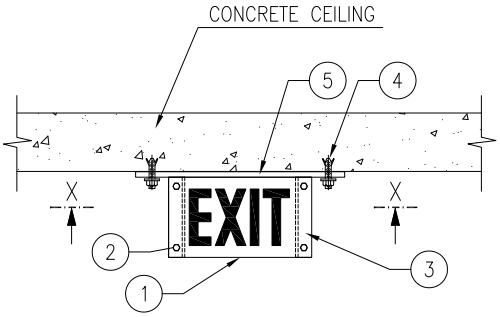

FRONT VIEW

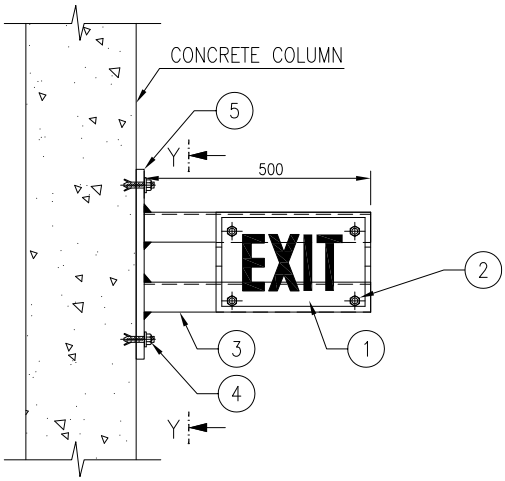

FRONT VIEW

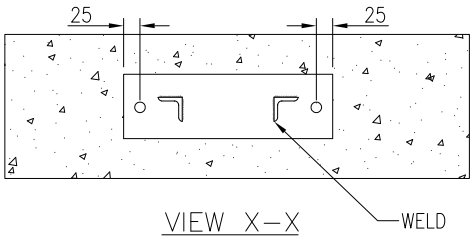

VIEW X–X

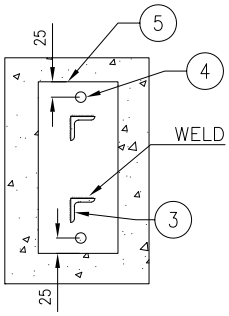

VIEW Y–Y

NOTES

1) ALL DIMENSION ARE IN 'mm' UNLESS OTHERWISE STATED.
2) STEEL SECTIONS SHALL BE PREFABRICATED & PAINTED BEFORE INSTALLATION.
3) THESE DETAILS SHALL BE VERIFIED WITH ORDERED EQUIPMENT DRAWING.
4) SUPPLY & INSTALLATION OF STEEL IS NOT PART OF THIS INSTALLATION ARRANGEMENT. SAME IS COVERED ELSEWHERE.

DRAWING NOT TO SCALE

Code	Contract No.	Document ID	Part	Rev.
		PIN–LEP–ELT–4003		00

Rev.	Date	Name (Drawn/Prepared)		Date	Name (Checked)		Date	Name (Approved)	Description	Acc. Code	Cat. Code	Acc. Code	Status
00	01.08.2017	KRP	MLD	01.08.2017	RPM		01.08.2017	RPM	ISSUED AS STANDARD				

BAR–Code

Store Location: Server/Share

Store Location: Folder

Store Name LESC3

Pro. Unit	TON	Group	Type of Document	Sheet
				1 / 1

Con. Unit	Scale	Order No.
	NTS	

thyssenkrupp

	Date	Name
Drawn	01.08.2017	KRP
Prepared	01.08.2017	MLD
Checked	01.08.2017	RPM
Approved	01.08.2017	RPM

Description
INSTALLATION STANDARDS – LIGHTING EXIT SIGN ON CEILING/ SIDE OF CONCRETE COLUMN (LESC3)

ISO A4

UH_BO_ISO_A4_P_E_tktSIndia.dwg / AG03_UH_BO_ISO_A4_P.dwg / 14.12.2016

© thyssenkrupp Industrial Solutions (India) Private Limited 2017. All rights reserved

ITEM	DESCRIPTION	MATERIAL	QTY.	SUPPLY BY	INSTALLATION BY
1	EXIT SIGN FIXTURE	–	1 NO.	CLIENT	ELECTRICAL CONTRACTOR
2	HEXAGONAL HEAD BOLT M10 X 30mm LONG, THREADS UPTO HEAD, WITH SUITABLE NUTS & WASHERS (REFER NOTE-3)	H.D.G.I.	4 SETS	ELECTRICAL CONTRACTOR	ELECTRICAL CONTRACTOR
3	ISA 50 (50x50x6)	M.S. PAINTED	AS REQUIRED	(REFER NOTE-3 & 4)	

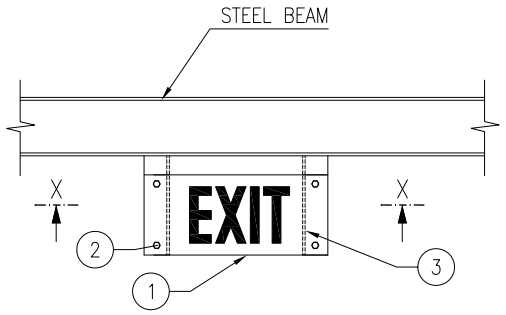

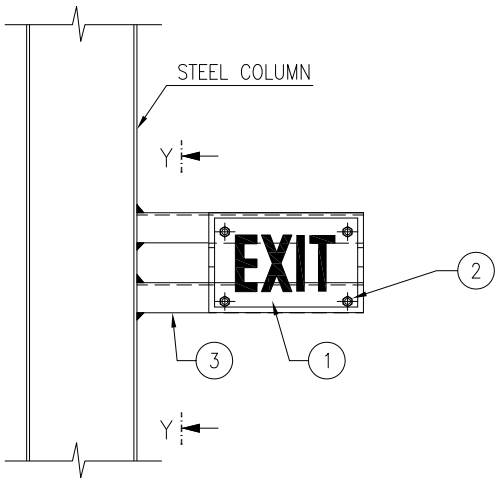

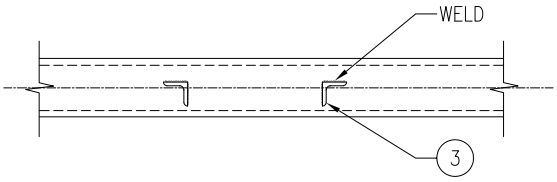

VIEW X–X

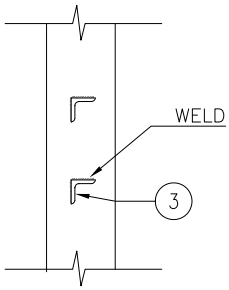

VIEW Y–Y

DRAWING NOT TO SCALE

NOTES

1) ALL DIMENSION ARE IN 'mm' UNLESS OTHERWISE STATED.
2) STEEL SECTIONS SHALL BE PREFABRICATED & PAINTED BEFORE INSTALLATION.
3) THESE DETAILS SHALL BE VERIFIED WITH ORDERED EQUIPMENT DRAWING.
4) SUPPLY & INSTALLATION OF STEEL IS NOT PART OF THIS INSTALLATION ARRANGEMENT. SAME IS COVERED ELSEWHERE.

Code	Contract No.	Document ID	Part	Rev.
		PIN–LEP–ELT–4003		00

Rev.	Date	Name (Drawn/Prepared)	Date	Name (Checked)	Date	Name (Approved)	Description	Acc. Code	Cat. Code	Acc. Code	Status
00	01.08.2017	KRP	01.08.2017	MLD	01.08.2017	RPM	01.08.2017	RPM	ISSUED AS STANDARD				

BAR–Code

Store Location: Server/Share

Store Location: Folder

Store Name LESS1

Pro. Unit	TON	Group	Type of Document	Sheet
				1 / 1

Con. Unit	Scale	Order No.
	NTS	

thyssenkrupp

	Date	Name
Drawn	01.08.2017	KRP
Prepared	01.08.2017	MLD
Checked	01.08.2017	RPM
Approved	01.08.2017	RPM

Description

INSTALLATION STANDARDS – LIGHTING EXIT SIGN ON STEEL BEAM/COLUMN (LESS1)

ISO A4

UH_BO_ISO_A4_P_E_tktSIndia.dwg / AG03_UH_BO_ISO_A4_P.dwg / 14.12.2016

© thyssenkrupp Industrial Solutions (India) Private Limited 2017. All rights reserved

ITEM	DESCRIPTION	MATERIAL	QTY.	SUPPLY BY	INSTALLATION BY
1	DECORATIVE TYPE EXIT SIGN FIXTURE	–	1 NO.	CLIENT	ELECTRICAL CONTRACTOR
2	ACCESSORIES REQUIRED TO FIX EXIT SIGN FIXTURE AS PER MOUNTING TYPE INDICATED IN DRAWING (ACCESSORIES SUCH AS SELF THREADED SCREWS, NUT, BOLTS, WASHERS, GI CHAIN LINKS ETC. OF SUITABLE SIZE) (REFER NOTE–2)	–	AS REQUIRED	ELECTRICAL CONTRACTOR	ELECTRICAL CONTRACTOR

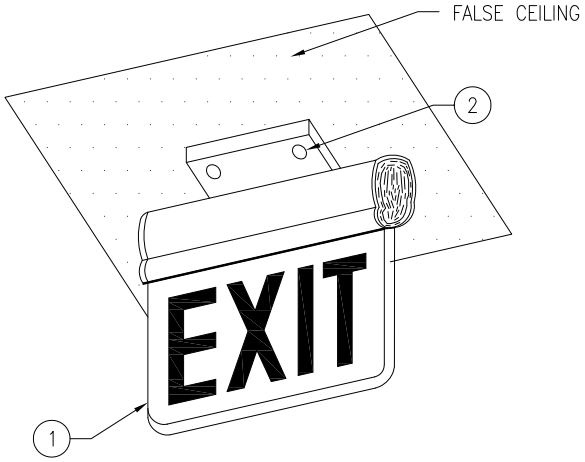

DRAWING NOT TO SCALE

NOTES

1) ALL DIMENSION ARE IN 'mm' UNLESS OTHERWISE STATED.
2) THESE DETAILS SHALL BE VERIFIED WITH ORDERED EQUIPMENT.

Code	Contract No.	Document ID	Part	Rev.
		PIN–LEP–ELT–4003		00

Rev.	Date	Name (Drawn/Prepared)		Date	Name (Checked)		Date	Name (Approved)	Description	Acc. Code	Cat. Code	Acc. Code	Status
00	01.08.2017	KRP	MLD	01.08.2017	RPM		01.08.2017	RPM	ISSUED AS STANDARD				

BAR–Code

Store Location: Server/Share

Store Location: Folder

Store Name LESZ1

Pro. Unit	TON	Group	Type of Document	Sheet
				1 / 1

Con. Unit	Scale	Order No.
	NTS	

thyssenkrupp

	Date	Name
Drawn	01.08.2017	KRP
Prepared	01.08.2017	MLD
Checked	01.08.2017	RPM
Approved	01.08.2017	RPM

Description
INSTALLATION STANDARDS – LIGHTING DECORATIVE TYPE EXIT SIGN AT FALSE CEILING/RECESS MOUNTED (LESZ1)

ISO A4

UH_BO_ISO_A4_P_E_tktSIndia.dwg / AG03_UH_BO_ISO_A4_P.dwg / 14.12.2016

© thyssenkrupp Industrial Solutions (India) Private Limited 2017. All rights reserved

ITEM	DESCRIPTION	MATERIAL	QTY.	SUPPLY BY	INSTALLATION BY
1	DECORATIVE TYPE EXIT SIGN FIXTURE	–	1 NO.	CLIENT	ELECTRICAL CONTRACTOR
2	ACCESSORIES REQUIRED TO FIX EXIT SIGN FIXTURE AS PER MOUNTING TYPE INDICATED IN DRAWING (ACCESSORIES SUCH AS SELF THREADED SCREWS, NUT, BOLTS, WASHERS ETC. OF SUITABLE SIZE) (REFER NOTE–2)	–	AS REQUIRED	ELECTRICAL CONTRACTOR	ELECTRICAL CONTRACTOR

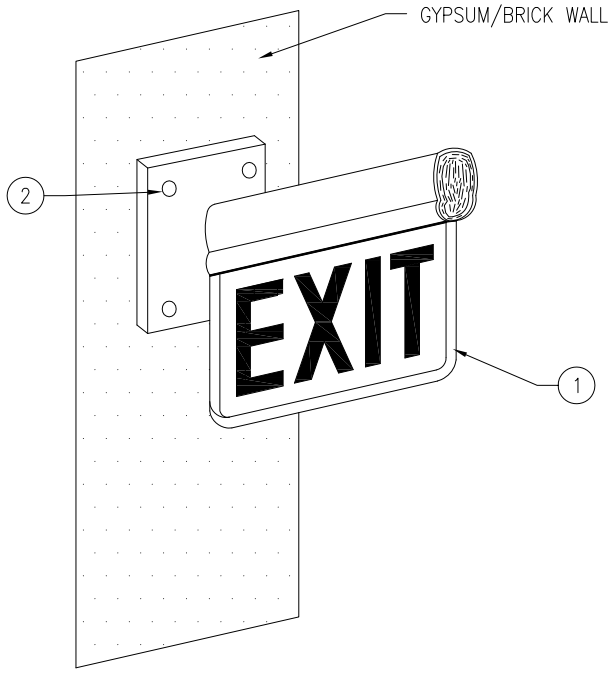

DRAWING NOT TO SCALE

NOTES

1) ALL DIMENSION ARE IN 'mm' UNLESS OTHERWISE STATED.
2) THESE DETAILS SHALL BE VERIFIED WITH ORDERED EQUIPMENT.

Code	Contract No.	Document ID	Part	Rev.
		PIN–LEP–ELT–4003		00

Rev.	Date	Name (Drawn/Prepared)	Date	Name (Checked)	Date	Name (Approved)	Description	Acc. Code	Cat. Code	Acc. Code	Status
00	01.08.2017	KRP / MLD	01.08.2017	RPM	01.08.2017	RPM	ISSUED AS STANDARD				

BAR–Code

Store Location: Server/Share

Store Location: Folder

Store Name LESZ2

Pro. Unit	TON	Group	Type of Document	Sheet
				1 / 1

Con. Unit	Scale	Order No.
	NTS	

thyssenkrupp

	Date	Name
Drawn	01.08.2017	KRP
Prepared	01.08.2017	MLD
Checked	01.08.2017	RPM
Approved	01.08.2017	RPM

Description
INSTALLATION STANDARDS – LIGHTING
DECORATIVE TYPE EXIT SIGN
ON GYPSUM/BRICK WALL
(LESZ2)

ISO A4

UH_BO_ISO_A4_P_E_tktSIndia.dwg / AG03_UH_BO_ISO_A4_P.dwg / 14.12.2016

© thyssenkrupp Industrial Solutions (India) Private Limited 2017. All rights reserved

ITEM	DESCRIPTION	MATERIAL	QTY.	SUPPLY BY	INSTALLATION BY
1	FLOOD LIGHT FIXTURE	–	1 NO.	CLIENT	ELECTRICAL CONTRACTOR
2	150 x 150 X 10mm THK PLATE	M.S. PAINTED	1 NO.	REFER NOTE–4	
3	ISMC 75	M.S. PAINTED	AS REQUIRED	REFER NOTE–3 & 4	
4	M8 x 60mm LONG ANCHOR FASTENER, WITH SUITABLE NUT & WASHERS	GALVANISED STEEL/SS	4 SETS	ELECTRICAL CONTRACTOR	ELECTRICAL CONTRACTOR
5	HEXAGONAL HEAD BOLT M12 X 30mm LONG, THREADS UPTO HEAD, WITH NUTS & WASHERS SUITABLE FOR CONNECTIONS SHOWN IN THIS DRAWING	H.D.G.I.	1 SET	ELECTRICAL CONTRACTOR	ELECTRICAL CONTRACTOR
6	HEXAGONAL HEAD BOLT M10 X 30mm LONG, THREADS UPTO HEAD, WITH NUTS & WASHERS SUITABLE FOR ORDERED LIGHTING FIXTURE (REFER NOTE–3)	H.D.G.I.	2 SETS	ELECTRICAL CONTRACTOR	ELECTRICAL CONTRACTOR

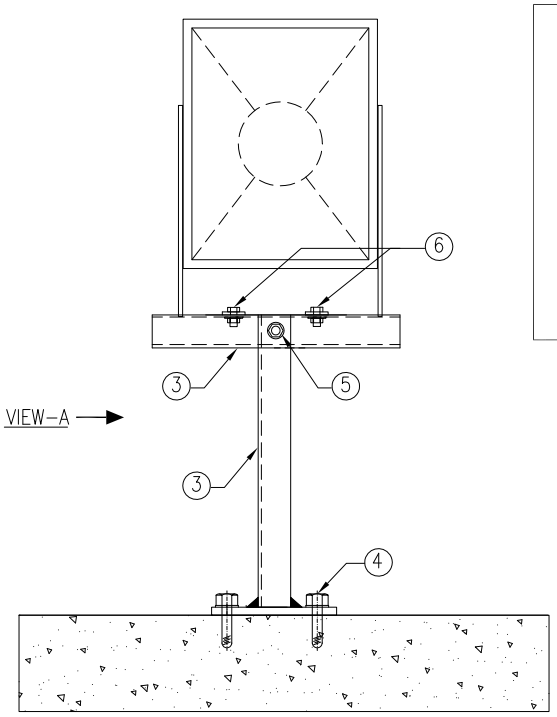

FRONT VIEW

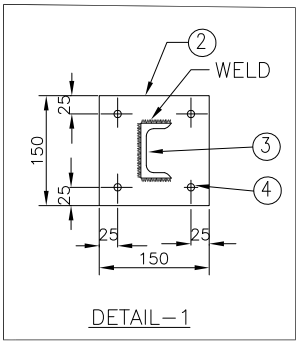

DETAIL–1

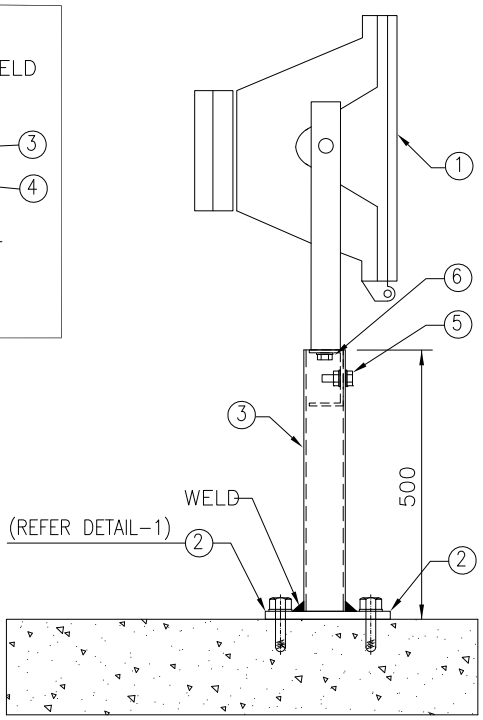

VIEW–A

DRAWING NOT TO SCALE

NOTES:–

1) ALL DIMENSION ARE IN 'mm' UNLESS OTHERWISE SPECIFIED.
2) THE SUPPORT SHALL BE PREFABRICATED AND PAINTED BEFORE INSTALLATION. AREA AFFECTED DUE TO SITE WELDING SHALL BE CLEANED AND PAINTED.
3) THE DETAILS (SIZE AND DIMENSIONS) SHALL BE VERIFIED WITH ORDERED LIGHTING FIXTURE.
4) SUPPLY & INSTALLATION OF STEEL IS NOT PART OF THIS INSTALLATION ARRANGEMENT. SAME IS COVERED ELSEWHERE.

Code	Contract No.	Document ID	Part	Rev.
		PIN–LEP–ELT–4003		00

Rev.	Date	Name (Drawn/Prepared)		Date	Name (Checked)		Date	Name (Approved)		Description	Acc. Code	Cat. Code	Acc. Code	Status
00	01/08/16	RDK	ANK	01/08/16	RPM		01/08/16	RPM		ISSUED AS STANDARD				

BAR–Code

Store Location: Server/Share

Store Location: Folder

Store Name LFDC1

Pro. Unit	TON	Group	Type of Document	Sheet
				1 / 1

Con. Unit	Scale	Order No.
	NTS	

thyssenkrupp

	Date	Name
Drawn	01/08/16	RDK
Prepared	01/08/16	ANK
Checked	01/08/16	RPM
Approved	01/08/16	RPM

Description

INSTALLATION STANDARDS – LIGHTING FLOOD LIGHT FIXTURE ON BRACKET, ON CONCRETE FLOOR/BEAM. (LFDC1)

ISO A4

UH_BO_ISO_A4_P_E_tktSIndia.dwg / AG03_UH_BO_ISO_A4_P.dwg / 14.12.2016

© thyssenkrupp Industrial Solutions (India) Private Limited 2017. All rights reserved

UH_BO_ISO_A4_P_E_tktSIndia.dwg / AG03_UH_BO_ISO_A4_P.dwg / 14.12.2016

ITEM	DESCRIPTION	MATERIAL	QTY.	SUPPLY BY	INSTALLATION BY
1	FLOOD LIGHT FIXTURE	–	1 NO.	CLIENT	ELECTRICAL CONTRACTOR
2	150 x 150 X 10mm THK PLATE	M.S. PAINTED	1 NO.	REFER NOTE–4	
3	ISMC 75	M.S. PAINTED	AS REQUIRED	REFER NOTE–3 & 4	
4	M8 x 60mm LONG ANCHOR FASTENER, WITH SUITABLE NUT & WASHERS	GALVANISED STEEL/SS	4 SETS	ELECTRICAL CONTRACTOR	ELECTRICAL CONTRACTOR
5	HEXAGONAL HEAD BOLT M12 X 30mm LONG, THREADS UPTO HEAD, WITH NUTS & WASHERS SUITABLE FOR CONNECTIONS SHOWN IN THIS DRAWING	H.D.G.I.	1 SET	ELECTRICAL CONTRACTOR	ELECTRICAL CONTRACTOR
6	HEXAGONAL HEAD BOLT M10 X 30mm LONG, THREADS UPTO HEAD, WITH NUTS & WASHERS SUITABLE FOR ORDERED LIGHTING FIXTURE (REFER NOTE–3)	H.D.G.I.	2 SETS	ELECTRICAL CONTRACTOR	ELECTRICAL CONTRACTOR

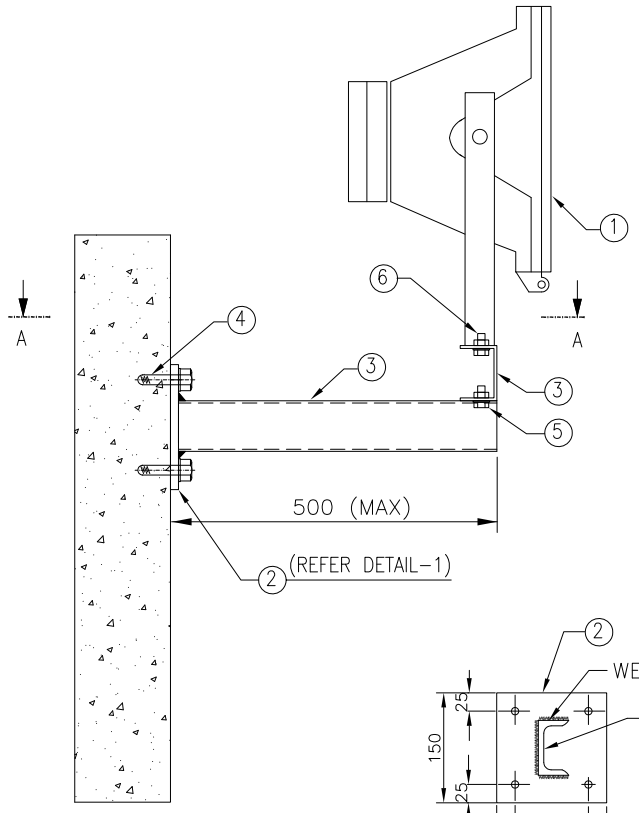

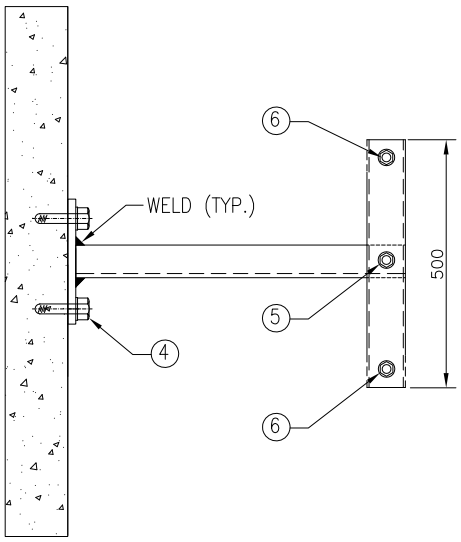

SECTION A–A

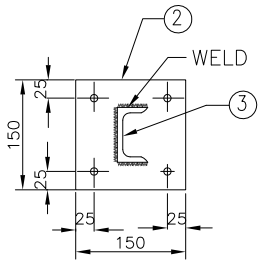

DETAIL–1

NOTES:–

1) ALL DIMENSION ARE IN 'mm' UNLESS OTHERWISE SPECIFIED.
2) THE SUPPORT SHALL BE PREFABRICATED AND PAINTED BEFORE INSTALLATION. AREA AFFECTED DUE TO SITE WELDING SHALL BE CLEANED AND PAINTED.
3) THE DETAILS (SIZE AND DIMENSIONS) SHALL BE VERIFIED WITH ORDERED LIGHTING FIXTURE.
4) SUPPLY & INSTALLATION OF STEEL IS NOT PART OF THIS INSTALLATION ARRANGEMENT. SAME IS COVERED ELSEWHERE.

Code	Contract No.	Document ID	Part	Rev.
		PIN–LEP–ELT–4003		00

Rev.	Date	Name (Drawn/Prepared)		Date	Name (Checked)		Date	Name (Approved)	Description	Acc. Code	Cat. Code	Acc. Code	Status
00	01/08/16	RDK	ANK	01/08/16	RPM		01/08/16	RPM	ISSUED AS STANDARD				

BAR–Code

Store Location: Server/Share

Store Location: Folder

Store Name LFDC2

Pro. Unit	TON	Group	Type of Document	Sheet
				1 / 1

Con. Unit	Scale	Order No.
	NTS	

thyssenkrupp

	Date	Name
Drawn	01/08/16	RDK
Prepared	01/08/16	ANK
Checked	01/08/16	RPM
Approved	01/08/16	RPM

Description

INSTALLATION STANDARDS – LIGHTING FLOOD LIGHT FIXTURE ON BRACKET, ON CONCRETE WALL/COLUMN (LFDC2)

ISO A4

© thyssenkrupp Industrial Solutions (India) Private Limited 2017. All rights reserved

UH_BO_ISO_A4_P_E_tktSIndia.dwg / AG03_UH_BO_ISO_A4_P.dwg / 14.12.2016

ITEM	DESCRIPTION	MATERIAL	QTY.	SUPPLY BY	INSTALLATION BY
1	FLOOD LIGHT LUMINAIRE	–	1 NO.	CLIENT	ELECTRICAL CONTRACTOR
2	PRE–FABRICATED NB100 PIPE (MEDIUM CLASS)	H.D.G.I.	5 METERS	ELECTRICAL CONTRACTOR	ELECTRICAL CONTRACTOR
3	ISMC 75	M.S. PAINTED	AS REQUIRED	REFER NOTE 3 & 4	
4	HEXAGONAL HEAD BOLT M10 X 30mm LONG, THREADS UPTO HEAD, WITH NUTS & WASHERS SUITABLE FOR CONNECTIONS SHOWN IN THIS DRAWING (REFER NOTE–3)	H.D.G.I.	2 SETS	ELECTRICAL CONTRACTOR	CONTRACTOR
5	U BOLT M10 SIZE THREADED AT THE END SUITABLE FOR NB100 PIPE DIA. WITH NUT & WASHERS.	H.D.G.I.	1 SET	ELECTRICAL CONTRACTOR	ELECTRICAL CONTRACTOR
6	25mm ø 750mm LONG EARTHING ROD	H.D.G.I.	1 NO.	ELECTRICAL CONTRACTOR	ELECTRICAL CONTRACTOR
7	50mm ø PIPE SLEEVE 1800 LONG (INCLUSIVE OF EDGE PROTECTION FOR CABLES)	H.D.G.I.	2 NOS.	ELECTRICAL CONTRACTOR	ELECTRICAL CONTRACTOR
8	EARTHING CONDUCTOR WITH LUG AND FIXING HARDWARE. SIZE OF EARTHING CONDUTOR & MATERIAL SHALL BE AS PER THE 'EARTHING SCHEDULE' FOR THE PROJECT.	–	AS REQUIRED	ELECTRICAL CONTRACTOR	ELECTRICAL CONTRACTOR
9	200 x 200 x 10mm THK. PLATE	M.S. PAINTED	1 NO.	REFER NOTE 4	
10	CONCRETE MATERIAL AS INDICATED FOR BASE & SQUARE SHAPE FOUNDATION, BITUMEN & MISCELLANEOUS MATERIAL AS REQUIRED	–	1 LOT	ELECTRICAL CONTRACTOR	ELECTRICAL CONTRACTOR
11	EDGE PROTECTION FOR CABLE	RUBBER	1 NO.	ELECTRICAL CONTRACTOR	ELECTRICAL CONTRACTOR

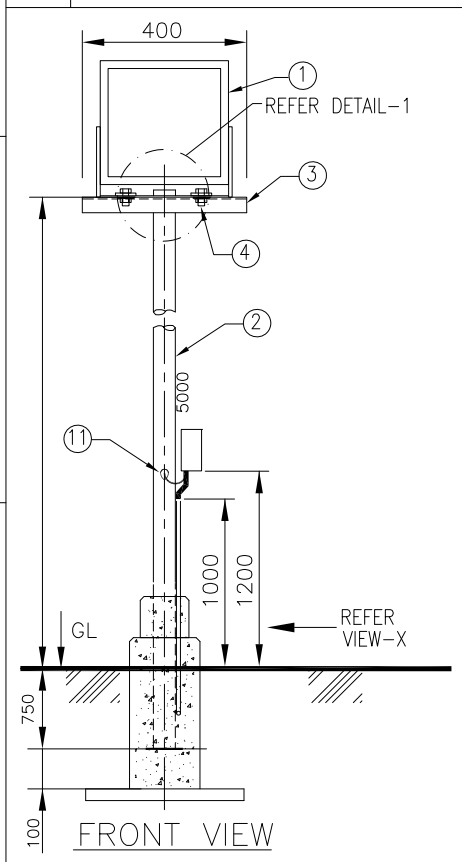

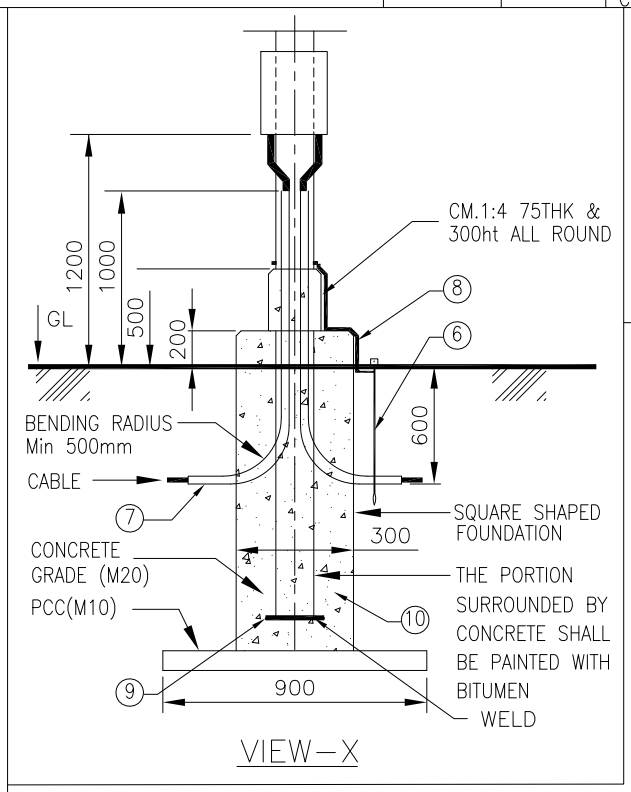

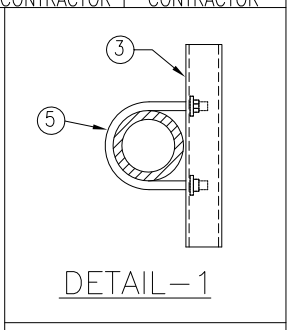

DRAWING NOT TO SCALE

NOTES:

1) ALL DIMENSION ARE IN 'mm' UNLESS OTHERWISE SPECIFIED.
2) THE SUPPORT SHALL BE PREFABRICATED AND PAINTED BEFORE INSTALLATION.
3) THE DETAILS (SIZE AND DIMENSIONS) SHALL BE VERIFIED WITH ORDERED LIGHTING FIXTURE.
4) SUPPLY & INSTALLATION OF STEEL IS NOT PART OF THIS INSTALLATION ARRANGEMENT. SAME IS COVERED ELSEWHERE.
5) REQUIRED CIVIL WORK AS SHOWN IN DRAWING SHALL BE IN ELECTRICAL CONTRACTORS SCOPE

Code	Contract No.	Document ID	Part	Rev.
		PIN–LEP–ELT–4003		00

Rev.	Date	Name (Drawn/Prepared)		Date	Name (Checked)		Date	Name (Approved)	Description	Acc. Code	Cat. Code	Acc. Code	Status
00	01/08/16	RDK	ANK	01/08/16	RPM		01/08/16	RPM	ISSUED AS STANDARD				

BAR–Code

Store Location: Server/Share

Store Location: Folder

Store Name LFDP1

Pro. Unit	TON	Group	Type of Document	Sheet
				1 / 1

Con. Unit	Scale	Order No.
	NTS	

thyssenkrupp

	Date	Name
Drawn	01/08/16	RDK
Prepared	01/08/16	ANK
Checked	01/08/16	RPM
Approved	01/08/16	RPM

Description

INSTALLATION STANDARDS – LIGHTING FLOOD LIGHT FIXTURE ON POLE AT GROUND LEVEL (LFDP1)

ISO A4

© thyssenkrupp Industrial Solutions (India) Private Limited 2017. All rights reserved

ITEM	DESCRIPTION	MATERIAL	QTY.	SUPPLY BY	INSTALLATION BY
1	FLOOD LIGHT FIXTURE	–	1 NO.	CLIENT	ELECTRICAL CONTRACTOR
2	PREFABRICATED NB 50 (MEDIUM CLASS) PIPE (REFER NOTE–5)	M.S. PAINTED	1.8 MTRS.	ELECTRICAL CONTRACTOR	ELECTRICAL CONTRACTOR
3	ISMC 75	H.D.G.I.	AS REQUIRED	REFER NOTE–3 & 4	
4	HEXAGONAL HEAD BOLT M10 X 30mm LONG, THREADS UPTO HEAD, WITH NUTS & WASHERS SUITABLE FOR ORDERED LIGHTING FIXTURE (REFER NOTE–3)	H.D.G.I.	2 SETS	ELECTRICAL CONTRACTOR	ELECTRICAL CONTRACTOR
5	U BOLT M10 SIZE THREADED AT THE END SUITABLE FOR FOR NB 50 PIPE WITH NUT & WASHERS.	H.D.G.I.	5 SETS	ELECTRICAL CONTRACTOR	ELECTRICAL CONTRACTOR

DRAWING NOT TO SCALE

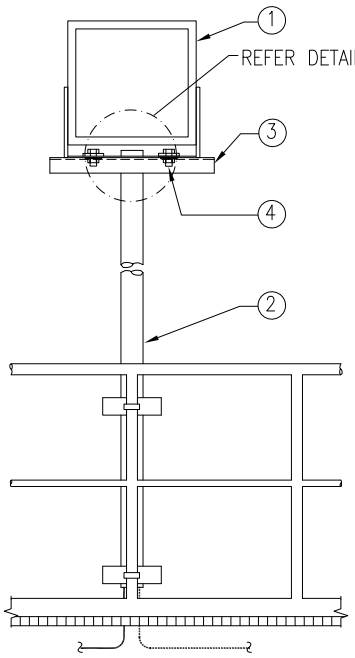

FRONT VIEW

VIEW–A

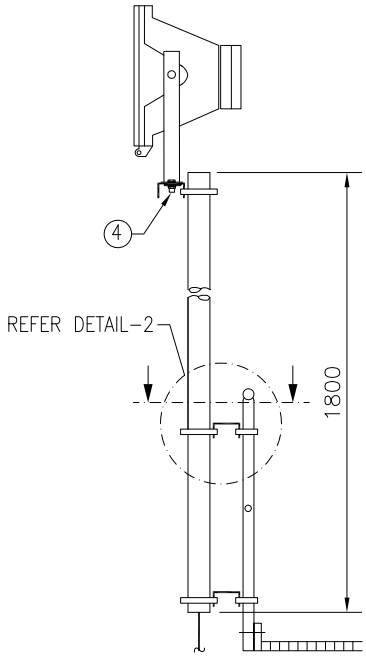

VIEW–A

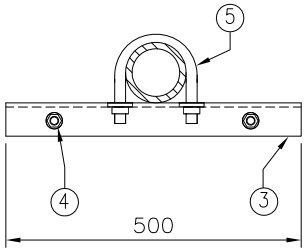

DETAIL–1

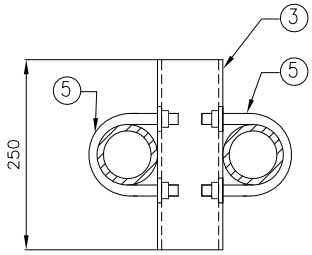

DETAIL–2

NOTES:–

1) ALL DIMENSION ARE IN 'mm' UNLESS OTHERWISE SPECIFIED.
2) THE SUPPORT SHALL BE PREFABRICATED AND PAINTED BEFORE INSTALLATION.
3) THE DETAILS (SIZE AND DIMENSIONS) SHALL BE VERIFIED WITH ORDERED LIGHTING FIXTURE.
4) SUPPLY & INSTALLATION OF STEEL IS NOT PART OF THIS INSTALLATION ARRANGEMENT. SAME IS COVERED ELSEWHERE.
5) THE DETAILS (SIZE AND DIMENSIONS) SHALL BE VERIFIED WITH NB 50 PIPE & HANDRAILING.

Code	Contract No.	Document ID	Part	Rev.
		PIN–LEP–ELT–4003		00

Rev.	Date	Name (Drawn/Prepared)		Date	Name (Checked)		Date	Name (Approved)		Description	Acc. Code	Cat. Code	Acc. Code	Status
00	01/08/16	RDK	ANK	01/08/16	RPM		01/08/16	RPM		ISSUED AS STANDARD				

BAR–Code

Store Location: Server/Share

Store Location: Folder

Store Name LFDR1

Pro. Unit	TON	Group	Type of Document	Sheet
				1 / 1

Con. Unit	Scale	Order No.
	NTS	

thyssenkrupp

	Date	Name
Drawn	01/08/16	RDK
Prepared	01/08/16	ANK
Checked	01/08/16	RPM
Approved	01/08/16	RPM

Description
INSTALLATION STANDARDS – LIGHTING FLOOD LIGHT FIXTURE ON POLE, ON STRUCTURAL STEEL RAILING (LFDR1)

ISO A4

UH_BO_ISO_A4_P_E_tktSIndia.dwg / AG03_UH_BO_ISO_A4_P.dwg / 14.12.2016

© thyssenkrupp Industrial Solutions (India) Private Limited 2017. All rights reserved

ITEM	DESCRIPTION	MATERIAL	QTY.	SUPPLY BY	INSTALLATION BY
1	FLOOD LIGHT FIXTURE	–	1 NO.	CLIENT	ELECTRICAL CONTRACTOR
2	ISMC 75	M.S. PAINTED	AS REQUIRED	REFER NOTE–3 & 4	
3	HEXAGONAL HEAD BOLT M12 X 30mm LONG, THREADS UPTO HEAD, WITH NUTS & WASHERS SUITABLE FOR CONNECTIONS SHOWN IN THIS DRAWING	H.D.G.I.	1 SET	ELECTRICAL CONTRACTOR	ELECTRICAL CONTRACTOR
4	HEXAGONAL HEAD BOLT M12 X 30mm LONG, THREADS UPTO HEAD, WITH NUTS & WASHERS SUITABLE FOR ORDERED LIGHTING FIXTURE (REFER NOTE–3)	H.D.G.I.	2 SETS	ELECTRICAL CONTRACTOR	ELECTRICAL CONTRACTOR

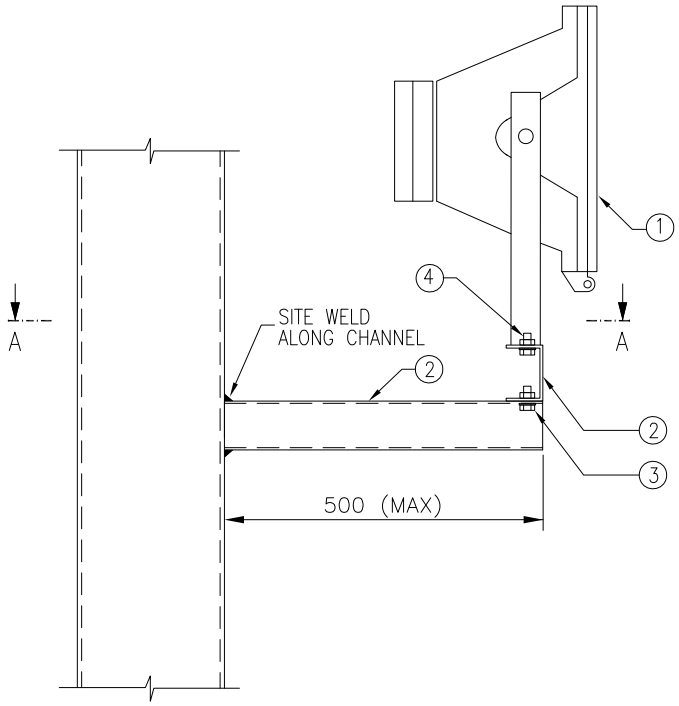

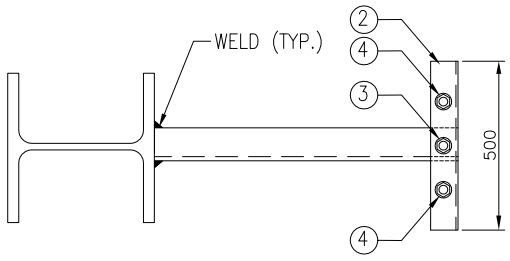

SECTION A–A

DRAWING NOT TO SCALE

NOTES:–

1) ALL DIMENSION ARE IN 'mm' UNLESS OTHERWISE SPECIFIED.
2) THE SUPPORT SHALL BE PREFABRICATED AND PAINTED BEFORE INSTALLATION.
3) THE DETAILS (SIZE AND DIMENSIONS) SHALL BE VERIFIED WITH ORDERED LIGHTING FIXTURE.
4) SUPPLY & INSTALLATION OF STEEL IS NOT PART OF THIS INSTALLATION ARRANGEMENT. SAME IS COVERED ELSEWHERE.

Code	Contract No.	Document ID	Part	Rev.
		PIN–LEP–ELT–4003		00

Rev.	Date	Name (Drawn/Prepared)		Date	Name (Checked)		Date	Name (Approved)	Description	Acc. Code	Cat. Code	Acc. Code	Status
00	01/08/16	RDK	ANK	01/08/16	RPM		01/08/16	RPM	ISSUED AS STANDARD				

BAR–Code

Store Location: Server/Share

Store Location: Folder

Store Name LFDS1

Pro. Unit	TON	Group	Type of Document	Sheet
				1 / 1

Con. Unit	Scale	Order No.
	NTS	

thyssenkrupp

	Date	Name
Drawn	01/08/16	RDK
Prepared	01/08/16	ANK
Checked	01/08/16	RPM
Approved	01/08/16	RPM

Description

INSTALLATION STANDARDS – LIGHTING FLOOD LIGHT FIXTURE ON BRACKET, ON STRUCTURAL STEEL COLUMN (LFDS1)

ISO A4

UH_BO_ISO_A4_P_E_tktSIndia.dwg / AG03_UH_BO_ISO_A4_P.dwg / 14.12.2016

© thyssenkrupp Industrial Solutions (India) Private Limited 2017. All rights reserved

ITEM	DESCRIPTION	MATERIAL	QTY.	SUPPLY BY	INSTALLATION BY
1	FLOOD LIGHT FIXTURE	–	1 NO.	CLIENT	ELECTRICAL CONTRACTOR
2	ISMC 75	M.S. PAINTED	AS REQUIRED	REFER NOTE–3 & 4	
3	HEXAGONAL HEAD BOLT M12 X 30mm LONG, THREADS UPTO HEAD, WITH NUTS & WASHERS SUITABLE FOR CONNECTIONS SHOWN IN THIS DRAWING	H.D.G.I.	1 SET	ELECTRICAL CONTRACTOR	ELECTRICAL CONTRACTOR
4	HEXAGONAL HEAD BOLT M10 X 30mm LONG, THREADS UPTO HEAD, WITH NUTS & WASHERS SUITABLE FOR ORDERED LIGHTING FIXTURE (REFER NOTE–3)	H.D.G.I.	2 SETS	ELECTRICAL CONTRACTOR	ELECTRICAL CONTRACTOR

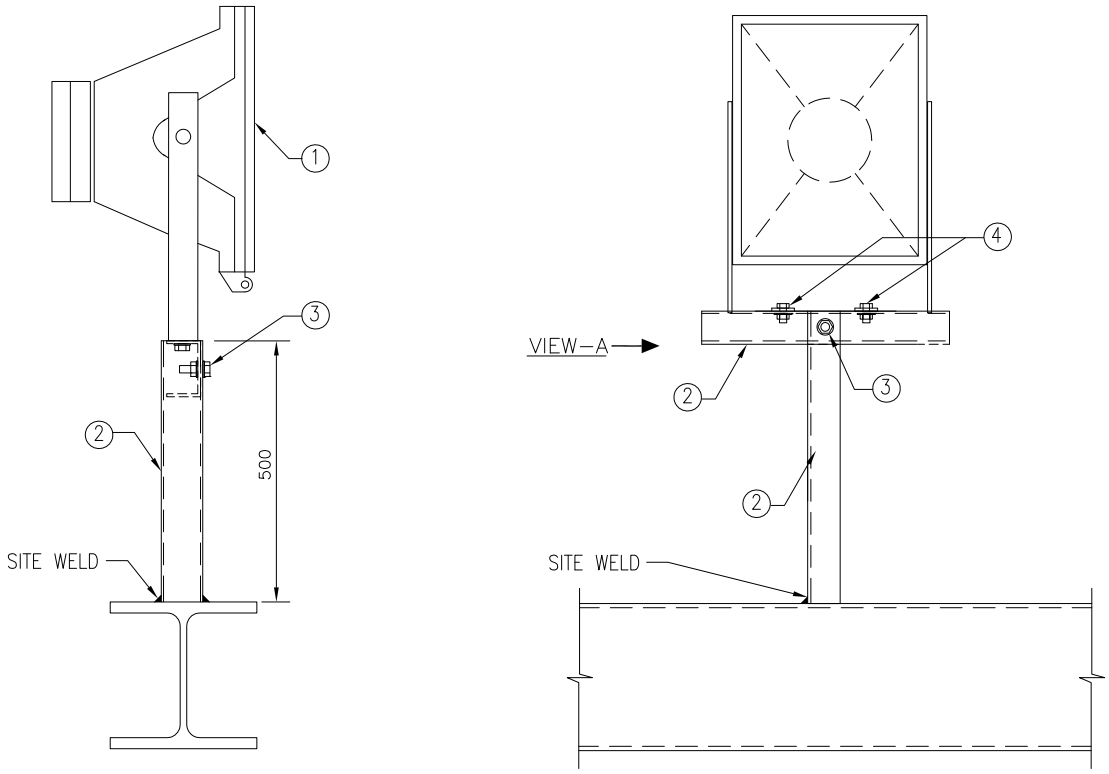

VIEW–A

FRONT VIEW

DRAWING NOT TO SCALE

NOTES:–

1) ALL DIMENSION ARE IN 'mm' UNLESS OTHERWISE SPECIFIED.
2) THE SUPPORT SHALL BE PREFABRICATED AND PAINTED BEFORE INSTALLATION.
3) THE DETAILS (SIZE AND DIMENSIONS) SHALL BE VERIFIED WITH ORDERED LIGHTING FIXTURE.
4) SUPPLY & INSTALLATION OF STEEL IS NOT PART OF THIS INSTALLATION ARRANGEMENT. SAME IS COVERED ELSEWHERE.

Code	Contract No.	Document ID	Part	Rev.
		PIN–LEP–ELT–4003		00

Rev.	Date	Name (Drawn/Prepared)		Date	Name (Checked)		Date	Name (Approved)	Description	Acc. Code	Cat. Code	Acc. Code	Status
00	01/08/16	RDK	ANK	01/08/16	RPM		01/08/16	RPM	ISSUED AS STANDARD				

BAR–Code

Store Location: Server/Share

Store Location: Folder

Store Name LFDS2

Pro. Unit	TON	Group	Type of Document	Sheet
				1 / 1

Con. Unit	Scale	Order No.
	NTS	

thyssenkrupp

	Date	Name
Drawn	01/08/16	RDK
Prepared	01/08/16	ANK
Checked	01/08/16	RPM
Approved	01/08/16	RPM

Description

INSTALLATION STANDARDS – LIGHTING FLOOD LIGHT FIXTURE ON BRACKET, ON STRUCTURAL STEEL BEAM (LFDS2)

ISO A4

UH_BO_ISO_A4_P_E_tktSIndia.dwg / AG03_UH_BO_ISO_A4_P.dwg / 14.12.2016

© thyssenkrupp Industrial Solutions (India) Private Limited 2017. All rights reserved

UH_BO_ISO_A4_P_E_IktSIndia.dwg / AG03_UH_BO_ISO_A4_P.dwg / 14.12.2016

ITEM	DESCRIPTION	MATERIAL	QTY.	SUPPLY BY	INSTALLATION BY
1	FLUORESCENT / LED LIGHTING FIXTURE	–	1 NO.	CLIENT	ELECTRICAL CONTRACTOR
2	ISMC 75	M.S. PAINTED	AS REQUIRED	REFER NOTE–3 & 4	
3	HEXAGONAL HEAD BOLT M10 X 30mm LONG, THREADS UPTO HEAD, WITH NUTS & WASHERS SUITABLE FOR CONNECTIONS SHOWN IN THIS DRAWING (REFER NOTE–3)	H.D.G.I.	2 SETS	ELECTRICAL CONTRACTOR	ELECTRICAL CONTRACTOR
4	M8 x 60mm LONG ANCHOR FASTENER, WITH SUITABLE NUT & WASHERS	GALVANISED STEEL/SS	2 SETS	ELECTRICAL CONTRACTOR	ELECTRICAL CONTRACTOR

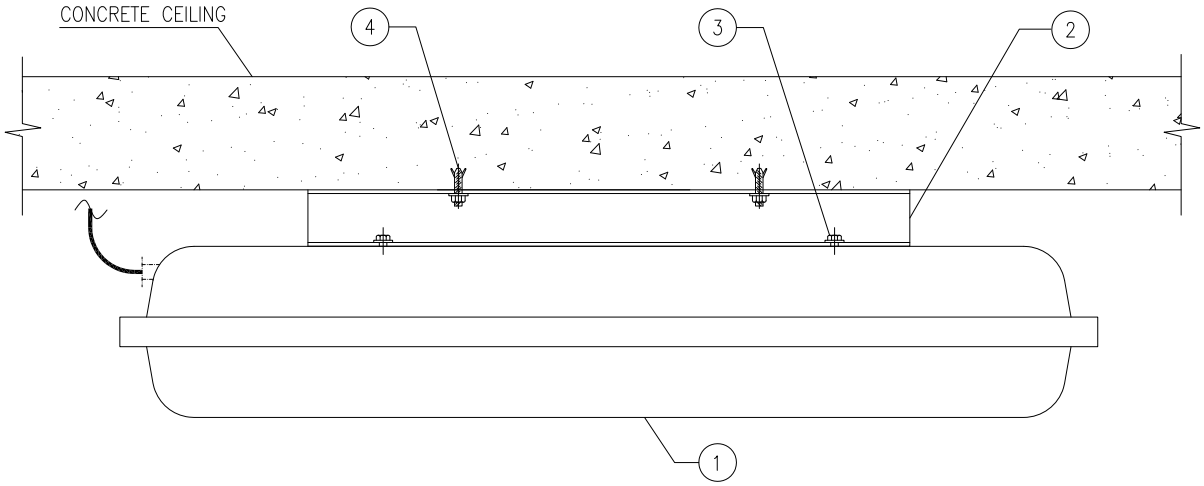

DRAWING NOT TO SCALE

NOTES:–

1) ALL DIMENSION ARE IN 'mm' UNLESS OTHERWISE SPECIFIED.
2) THE SUPPORT SHALL BE PREFABRICATED AND PAINTED BEFORE INSTALLATION.
3) THE DETAILS (SIZE AND DIMENSIONS) SHALL BE VERIFIED WITH ORDERED LIGHTING FIXTURE.
4) SUPPLY & INSTALLATION OF STEEL IS NOT PART OF THIS INSTALLATION ARRANGEMENT. SAME IS COVERED ELSEWHERE.

Code	Contract No.	Document ID	Part	Rev.
		PIN–LEP–ELT–4003		00

Rev.	Date	Name (Drawn/Prepared)		Date	Name (Checked)		Date	Name (Approved)		Description	Acc. Code	Cat. Code	Acc. Code	Status
00	01/08/16	RDK	ANK	01/08/16	RPM		01/08/16	RPM		ISSUED AS STANDARD				

BAR–Code

Store Location: Server/Share

Store Location: Folder

Store Name LFLC1

Pro. Unit	TON	Group	Type of Document	Sheet
				1 / 1

Con. Unit	Scale	Order No.
	NTS	

thyssenkrupp

	Date	Name
Drawn	01/08/16	RDK
Prepared	01/08/16	ANK
Checked	01/08/16	RPM
Approved	01/08/16	RPM

Description
INSTALLATION STANDARDS – LIGHTING FLUORESCENT/LED LIGHTING FIXTURE MOUNTED ON CONCRETE CEILING (LFLC1)

ISO A4

© thyssenkrupp Industrial Solutions (India) Private Limited 2017. All rights reserved

ITEM	DESCRIPTION	MATERIAL	QTY.	SUPPLY BY	INSTALLATION BY
1	FLUORESCENT / LED LIGHTING FIXTURE	–	1 NO.	CLIENT	ELECTRICAL CONTRACTOR
2	ISMC 75	M.S. PAINTED	AS REQUIRED	REFER NOTE–3 & 4	
3	HEXAGONAL HEAD BOLT M10 X 30mm LONG, THREADS UPTO HEAD, WITH NUTS & WASHERS SUITABLE FOR CONNECTIONS SHOWN IN THIS DRAWING	H.D.G.I.	2 SETS	ELECTRICAL CONTRACTOR	ELECTRICAL CONTRACTOR
4	HEXAGONAL HEAD BOLT M10 X 30mm LONG, THREADS UPTO HEAD, WITH NUTS & WASHERS SUITABLE FOR ORDERED LIGHTING FIXTURE (REFER NOTE–3)	H.D.G.I.	2 SETS	ELECTRICAL CONTRACTOR	ELECTRICAL CONTRACTOR
5	M8 x 60mm LONG ANCHOR FASTENER, WITH SUITABLE NUT & WASHERS	GALVANISED STEEL/SS	2 SETS	ELECTRICAL CONTRACTOR	ELECTRICAL CONTRACTOR
6	ISMC 75	M.S. PAINTED	AS REQUIRED	REFER NOTE–4 & 5	

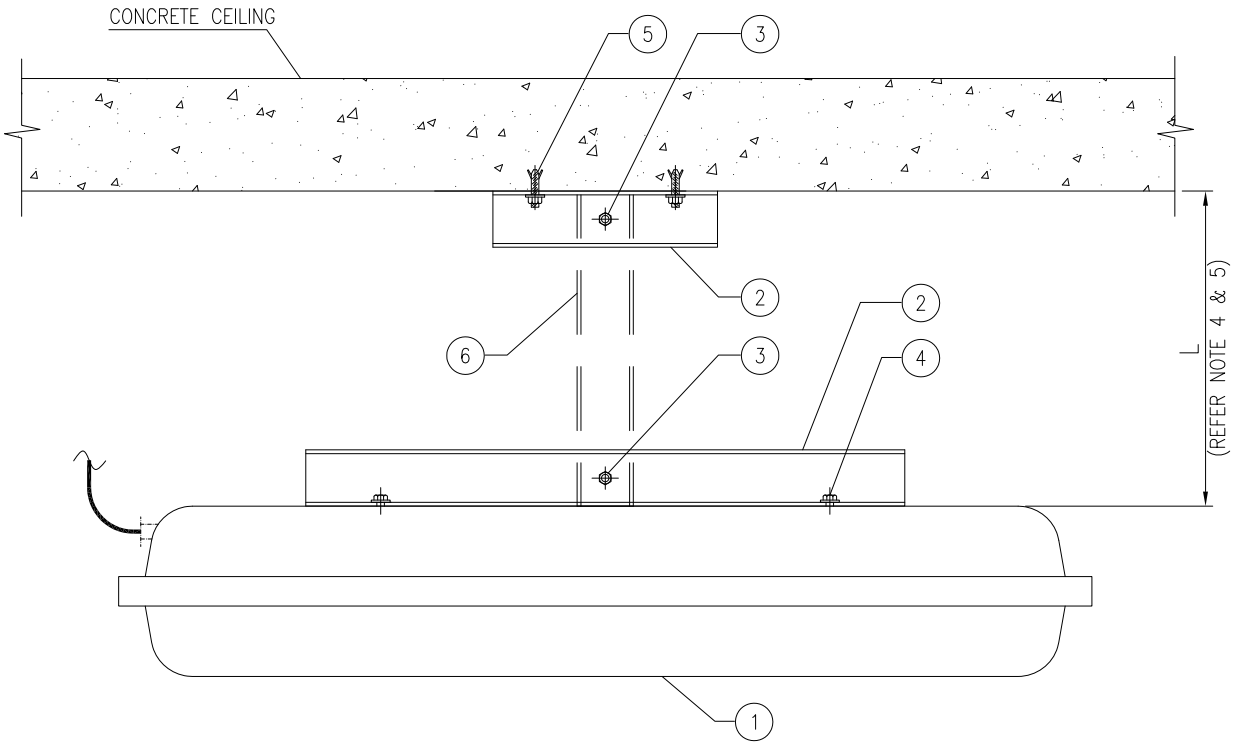

DRAWING NOT TO SCALE

NOTES:–

1) ALL DIMENSION ARE IN 'mm' UNLESS OTHERWISE SPECIFIED.
2) THE SUPPORT SHALL BE PREFABRICATED AND PAINTED BEFORE INSTALLATION.
3) THE DETAILS (SIZE AND DIMENSIONS) SHALL BE VERIFIED WITH ORDERED LIGHTING FIXTURE.
4) SUPPLY & INSTALLATION OF STEEL IS NOT PART OF THIS INSTALLATION ARRANGEMENT. SAME IS COVERED ELSEWHERE.
5) LENGTH OF ITEM 6 SHALL BE DECIDED WITH RESPECT TO LAYOUT DRAWING OR WITH CONSULTATION OF SITE ENGINEER. LENGTH SHALL BE RESTRICTED TO MAXIMUM 3 METERS.

Code	Contract No.	Document ID	Part	Rev.
		PIN–LEP–ELT–4003		00

Rev.	Date	Name (Drawn/Prepared)		Date	Name (Checked)		Date	Name (Approved)		Description	Acc. Code	Cat. Code	Acc. Code	Status
00	01/08/16	RDK	ANK	01/08/16	RPM		01/08/16	RPM		ISSUED AS STANDARD				

BAR–Code

Store Location: Server/Share

Store Location: Folder

Store Name LFLC2

Pro. Unit	TON	Group	Type of Document	Sheet
				1 / 1

Con. Unit	Scale	Order No.
	NTS	

thyssenkrupp

	Date	Name
Drawn	01/08/16	RDK
Prepared	01/08/16	ANK
Checked	01/08/16	RPM
Approved	01/08/16	RPM

Description
INSTALLATION STANDARDS – LIGHTING FLUORESCENT/LED LIGHTING FIXTURE SUSPENDED FROM CONCRETE CEILING (LFLC2)

ISO A4

UH_BO_ISO_A4_P_E_tktSIndia.dwg / AG03_UH_BO_ISO_A4_P.dwg / 14.12.2016

© thyssenkrupp Industrial Solutions (India) Private Limited 2017. All rights reserved

UH_BO_ISO_A4_P_E_tktSIndia.dwg / AG03_UH_BO_ISO_A4_P.dwg / 14.12.2016

ITEM	DESCRIPTION	MATERIAL	QTY.	SUPPLY BY	INSTALLATION BY
1	FLUORESCENT/LED LIGHT FIXTURE	–	1 NO.	CLIENT	ELECTRICAL CONTRACTOR
2	PREFABRICATED NB 50 (MEDIUM CLASS) PIPE (REFER NOTE–5)	H.D.G.I.	2 METERS	ELECTRICAL CONTRACTOR	ELECTRICAL CONTRACTOR
3	PIPE CLAMP FOR NB 50 PIPE WITH M6x20 HEXAGONAL BOLT, NUTS & WASHERS	H.D.G.I.	2 SETS	ELECTRICAL CONTRACTOR	ELECTRICAL CONTRACTOR
4	ISMC 75	M.S. PAINTED	AS REQUIRED	REFER NOTE–3 & 4	
5	M8 x 60mm LONG ANCHOR FASTENER, WITH SUITABLE NUT & WASHERS	GALVANISED STEEL/SS	4 SETS	ELECTRICAL CONTRACTOR	ELECTRICAL CONTRACTOR
6	U BOLT M10 SIZE THREADED AT THE END SUITABLE FOR NB 50 PIPE WITH NUT AND WASHERS	H.D.G.I.	2 SETS	ELECTRICAL CONTRACTOR	ELECTRICAL CONTRACTOR
7	HEXAGONAL HEAD BOLT M10 X 30mm LONG, THREADS UPTO HEAD, WITH NUTS & WASHERS SUITABLE FOR ORDERED LIGHTING FIXTURE (REFER NOTE–3)	H.D.G.I.	2 SETS	ELECTRICAL CONTRACTOR	ELECTRICAL CONTRACTOR
8	EDGE PROTECTION FOR CABLE	RUBBER	1 NO.	ELECTRICAL CONTRACTOR	ELECTRICAL CONTRACTOR

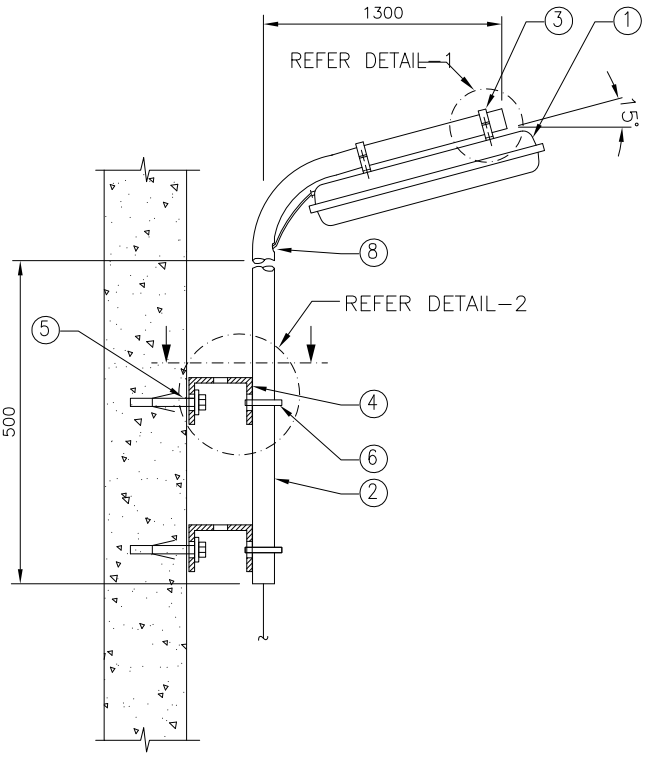

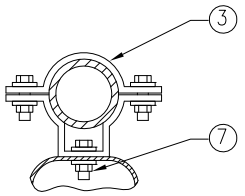

DETAIL–1

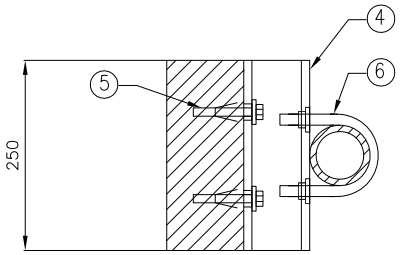

DETAIL–2

DRAWING NOT TO SCALE

NOTES:–

1) ALL DIMENSION ARE IN 'mm' UNLESS OTHERWISE SPECIFIED.
2) THE SUPPORT SHALL BE PREFABRICATED AND PAINTED BEFORE INSTALLATION.
3) THE DETAILS (SIZE AND DIMENSIONS) SHALL BE VERIFIED WITH ORDERED LIGHTING FIXTURE.
4) SUPPLY & INSTALLATION OF STEEL IS NOT PART OF THIS INSTALLATION ARRANGEMENT. SAME IS COVERED ELSEWHERE.
5) THE DETAILS (SIZE AND DIMENSIONS) SHALL BE VERIFIED WITH NB 50 & NB 80 PIPE.

Code	Contract No.	Document ID	Part	Rev.
		PIN–LEP–ELT–4003		00

Rev.	Date	Name (Drawn/Prepared)	Date	Name (Checked)	Date	Name (Approved)	Description	Acc. Code	Cat. Code	Acc. Code	Status
00	01/08/16	RDK	01/08/16	RPM	01/08/16	RPM	ISSUED AS STANDARD				

BAR–Code

Store Location: Server/Share

Store Location: Folder

Store Name LFLC3

Pro. Unit	TON	Group	Type of Document	Sheet
				1 / 1

Con. Unit	Scale	Order No.
	NTS	

thyssenkrupp

	Date	Name
Drawn	01/08/16	RDK
Prepared	01/08/16	ANK
Checked	01/08/16	RPM
Approved	01/08/16	RPM

Description
INSTALLATION STANDARDS – LIGHTING FLUORESCENT/LED LIGHTING FIXTURE ON POLE, BRACKET ON WALL/COLUMN (LFLC3)

ISO A4

© thyssenkrupp Industrial Solutions (India) Private Limited 2017. All rights reserved

UH_BO_ISO_A4_P_E_tktSIndia.dwg / AG03_UH_BO_ISO_A4_P.dwg / 14.12.2016

ITEM	DESCRIPTION	MATERIAL	QTY.	SUPPLY BY	INSTALLATION BY
1	FLUORESCENT/LED LIGHTING FIXTURE	–	1 NO.	CLIENT	ELECTRICAL CONTRACTOR
2	ISMC 75	M.S. PAINTED	AS REQUIRED	REFER NOTE–3 & 4	
3	HEXAGONAL HEAD BOLT M10 X 30mm LONG, THREADS UPTO HEAD, WITH NUTS & WASHERS SUITABLE FOR CONNECTIONS SHOWN IN THIS DRAWING	H.D.G.I.	4 SETS	ELECTRICAL CONTRACTOR	ELECTRICAL CONTRACTOR
4	M8 x 60mm LONG ANCHOR FASTENER, WITH SUITABLE NUT & WASHERS	GALVANISED STEEL/SS	2 SETS	ELECTRICAL CONTRACTOR	ELECTRICAL CONTRACTOR
5	ISA 65	M.S. PAINTED	AS REQUIRED	REFER NOTE–4	
6	HEXAGONAL HEAD BOLT M10 X 30mm LONG, THREADS UPTO HEAD, WITH NUTS & WASHERS SUITABLE FOR ORDERED LIGHTING FIXTURE (REFER NOTE–3)	H.D.G.I.	2 SETS	ELECTRICAL CONTRACTOR	ELECTRICAL CONTRACTOR

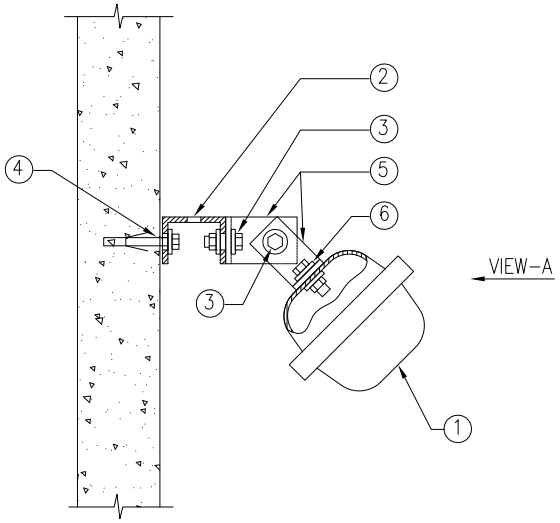

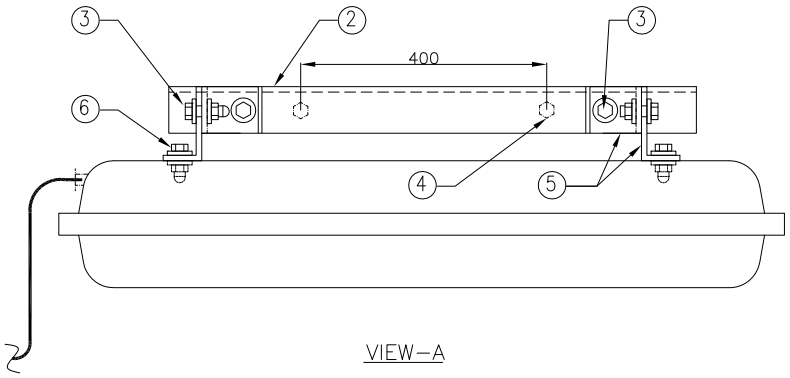

VIEW–A

DRAWING NOT TO SCALE

NOTES:–

1) ALL DIMENSION ARE IN 'mm' UNLESS OTHERWISE SPECIFIED.
2) THE SUPPORT SHALL BE PREFABRICATED AND PAINTED BEFORE INSTALLATION.
3) THE DETAILS (SIZE AND DIMENSIONS) SHALL BE VERIFIED WITH ORDERED LIGHTING FIXTURE.
4) SUPPLY & INSTALLATION OF STEEL IS NOT PART OF THIS INSTALLATION ARRANGEMENT. SAME IS COVERED ELSEWHERE.

Code	Contract No.	Document ID	Part	Rev.
		PIN–LEP–ELT–4003		00

Rev.	Date	Name (Drawn/Prepared)		Date	Name (Checked)		Date	Name (Approved)		Description	Acc. Code	Cat. Code	Acc. Code	Status
00	01/08/16	RDK	ANK	01/08/16	RPM		01/08/16	RPM		ISSUED AS STANDARD				

BAR–Code

Store Location: Server/Share

Store Location: Folder

Store Name LFLC4

Pro. Unit	TON	Group	Type of Document	Sheet
				1 / 1

Con. Unit	Scale	Order No.
	NTS	

thyssenkrupp

	Date	Name
Drawn	01/08/16	RDK
Prepared	01/08/16	ANK
Checked	01/08/16	RPM
Approved	01/08/16	RPM

Description
INSTALLATION STANDARDS – LIGHTING FLUORESCENT/LED LIGHTING FIXTURE MOUNTED ON CONCRETE WALL/COLUMN (LFLC4)

ISO A4

© thyssenkrupp Industrial Solutions (India) Private Limited 2017. All rights reserved

UH_BO_ISO_A4_P_E_tktSIndia.dwg / AG03_UH_BO_ISO_A4_P.dwg / 14.12.2016

ITEM	DESCRIPTION	MATERIAL	QTY.	SUPPLY BY	INSTALLATION BY
1	FLUORESCENT/LED LIGHTING FIXTURE	–	1 NO.	CLIENT	ELECTRICAL CONTRACTOR
2	CHAIN LINK WITH FAIL SAFE LOCKING ARRANGEMENT AT ENDS	H.D.G.I.	6 METERS	ELECTRICAL CONTRACTOR	ELECTRICAL CONTRACTOR
3	ISA 65 (65X65X6mm)	M.S. PAINTED	AS REQUIRED	REFER NOTE–3 & 4	
4	M8 x 60mm LONG ANCHOR FASTENER, WITH SUITABLE NUT & WASHERS	GALVANISED STEEL/SS	2 SETS	ELECTRICAL CONTRACTOR	ELECTRICAL CONTRACTOR
5	HEXAGONAL HEAD BOLT M10 X 30mm LONG, THREADS UPTO HEAD, WITH NUTS & WASHERS SUITABLE FOR ORDERED LIGHTING FIXTURE (REFER NOTE–3)	H.D.G.I.	2 SETS	ELECTRICAL CONTRACTOR	ELECTRICAL CONTRACTOR

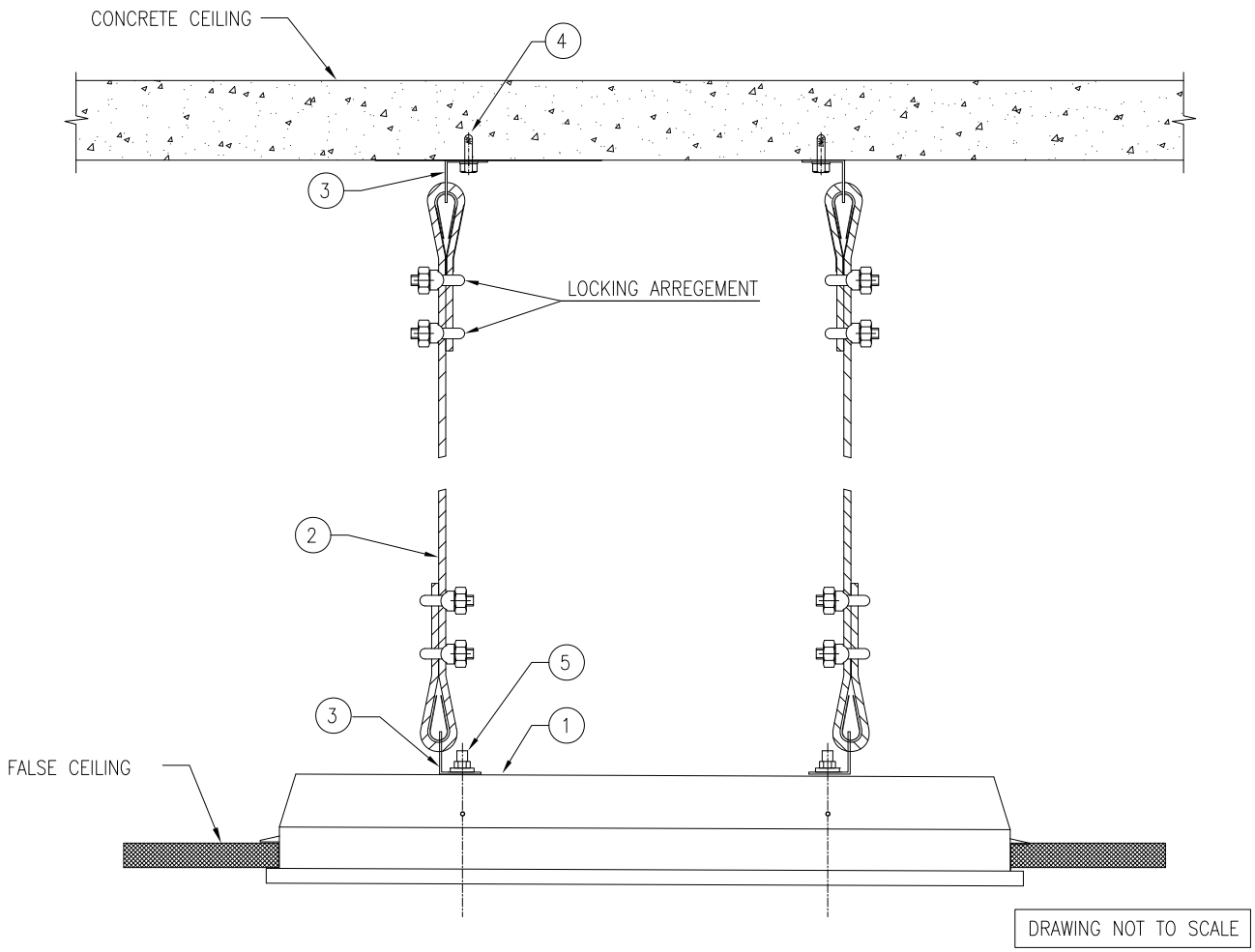

NOTES:–

1) ALL DIMENSION ARE IN 'mm' UNLESS OTHERWISE SPECIFIED.
2) THE SUPPORT SHALL BE PREFABRICATED AND PAINTED BEFORE INSTALLATION.
3) THE DETAILS (SIZE AND DIMENSIONS) SHALL BE VERIFIED WITH ORDERED LIGHTING FIXTURE.
4) SUPPLY & INSTALLATION OF STEEL IS NOT PART OF THIS INSTALLATION ARRANGEMENT. SAME IS COVERED ELSEWHERE.

Code	Contract No.	Document ID	Part	Rev.
		PIN–LEP–ELT–4003		00

Rev.	Date	Name (Drawn/Prepared)		Date	Name (Checked)		Date	Name (Approved)		Description	Acc. Code	Cat. Code	Acc. Code	Status
00	01/08/16	RDK	ANK	01/08/16	RPM		01/08/16	RPM		ISSUED AS STANDARD				

BAR–Code

Store Location: Server/Share

Store Location: Folder

Store Name LFLF1

Pro. Unit	TON	Group	Type of Document	Sheet
				1 / 1

Con. Unit	Scale	Order No.
	NTS	

thyssenkrupp

	Date	Name
Drawn	01/08/16	RDK
Prepared	01/08/16	ANK
Checked	01/08/16	RPM
Approved	01/08/16	RPM

Description
INSTALLATION STANDARDS – LIGHTING FLUORESCENT/LED LIGHTING FIXTURE RECESSED IN FALSE CEILING (LFLF1)

ISO A4

© thyssenkrupp Industrial Solutions (India) Private Limited 2017. All rights reserved

ITEM	DESCRIPTION	MATERIAL	QTY.	SUPPLY BY	INSTALLATION BY
1	FLUORESCENT/LED LIGHTING FIXTURE (SQUARE TILE)	–	1 NO.	CLIENT	ELECTRICAL CONTRACTOR
2	CHAIN LINK WITH FAIL SAFE LOCKING ARRANGEMENT AT ENDS (REFER NOTE–5)	H.D.G.I.	6 METERS	ELECTRICAL CONTRACTOR	ELECTRICAL CONTRACTOR
3	ISA 65 (65X65X6mm)	M.S. PAINTED	AS REQUIRED	REFER NOTE–3 & 4	
4	M8 x 60mm LONG ANCHOR FASTENER, WITH SUITABLE NUT & WASHERS	GALVANISED STEEL/SS	2 SETS	ELECTRICAL CONTRACTOR	ELECTRICAL CONTRACTOR
5	HEXAGONAL HEAD BOLT M10 X 30mm LONG, THREADS UPTO HEAD, WITH NUTS & WASHERS SUITABLE FOR ORDERED LIGHTING FIXTURE (REFER NOTE–3)	H.D.G.I.	2 SETS	ELECTRICAL CONTRACTOR	ELECTRICAL CONTRACTOR

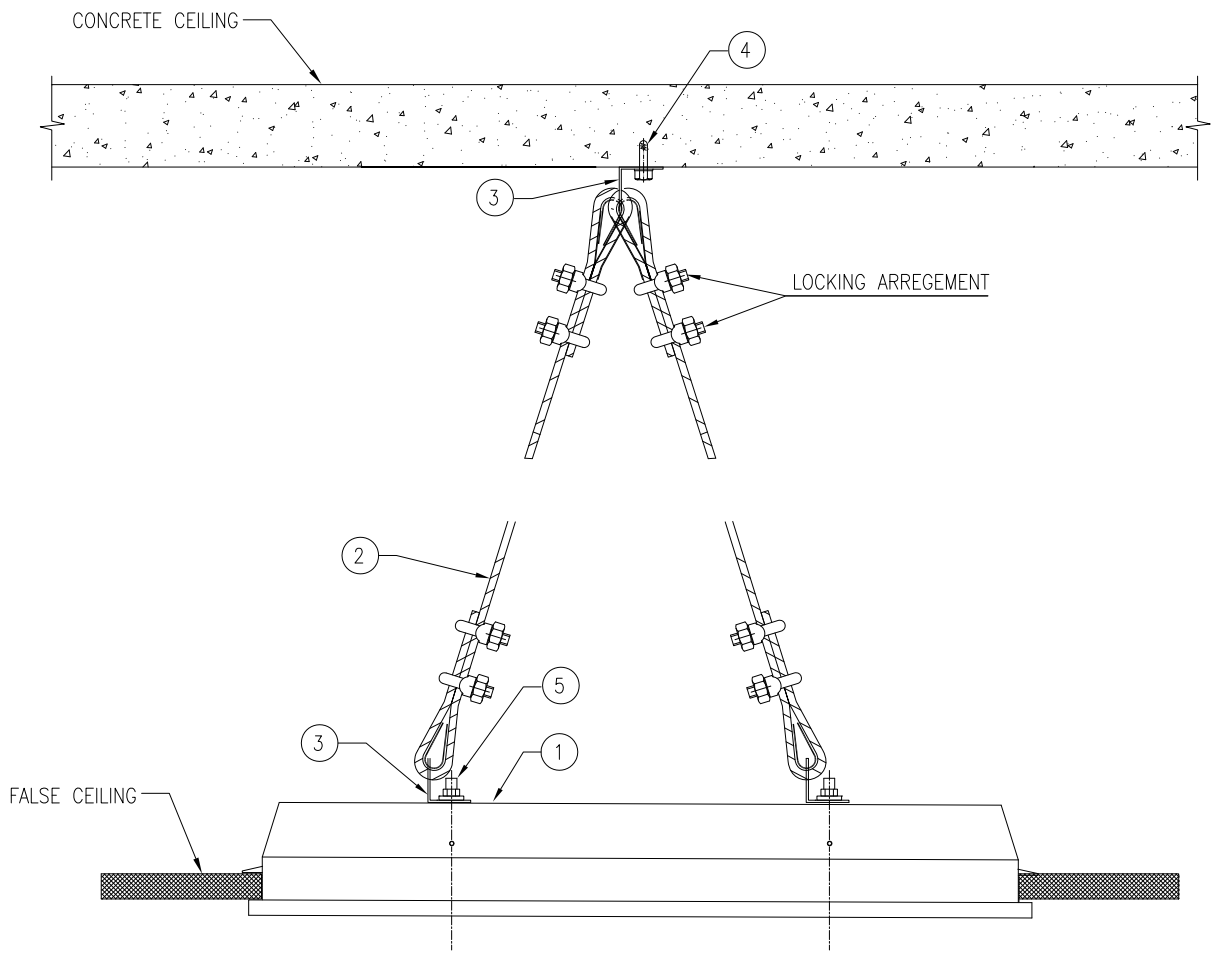

DRAWING NOT TO SCALE

NOTES:–

1) ALL DIMENSION ARE IN 'mm' UNLESS OTHERWISE SPECIFIED.
2) THE SUPPORT SHALL BE PREFABRICATED AND PAINTED BEFORE INSTALLATION.
3) THE DETAILS (SIZE AND DIMENSIONS) SHALL BE VERIFIED WITH ORDERED LIGHTING FIXTURE.
4) SUPPLY & INSTALLATION OF STEEL IS NOT PART OF THIS INSTALLATION ARRANGEMENT. SAME IS COVERED ELSEWHERE.
5) CHAIN LINKS SHALL BE INSTALLED ON DIAGONAL OPPOSITE ENDS.

Code	Contract No.	Document ID	Part	Rev.
		PIN–LEP–ELT–4003		00

Rev.	Date	Name (Drawn/Prepared)		Date	Name (Checked)		Date	Name (Approved)		Description	Acc. Code	Cat. Code	Acc. Code	Status
00	01/08/16	RDK	ANK	01/08/16	RPM		01/08/16	RPM		ISSUED AS STANDARD				

BAR–Code

Store Location: Server/Share

Store Location: Folder

Store Name LFLF2

Pro. Unit	TON	Group	Type of Document	Sheet
				1 / 1

Con. Unit	Scale	Order No.
	NTS	

thyssenkrupp

	Date	Name
Drawn	01/08/16	RDK
Prepared	01/08/16	ANK
Checked	01/08/16	RPM
Approved	01/08/16	RPM

Description

INSTALLATION STANDARDS – LIGHTING FLUORESCENT/LED (SQUARE TILE) LIGHTING FIXTURE RECESSED IN FALSE CEILING (LFLF2)

ISO A4

UH_BO_ISO_A4_P_E_tktSIndia.dwg / AG03_UH_BO_ISO_A4_P.dwg / 14.12.2016

© thyssenkrupp Industrial Solutions (India) Private Limited 2017. All rights reserved

ITEM	DESCRIPTION	MATERIAL	QTY.	SUPPLY BY	INSTALLATION BY
1	FLUORESCENT/LED LIGHTING FIXTURE	–	1 NO.	CLIENT	ELECTRICAL CONTRACTOR
2	ISMC 75	M.S. PAINTED	AS REQUIRED	REFER NOTE–3 & 4	
3	HEXAGONAL HEAD BOLT M10 X 30mm LONG, THREADS UPTO HEAD, WITH NUTS & WASHERS SUITABLE FOR ORDERED LIGHTING FIXTURE (REFER NOTE–3)	H.D.G.I.	2 SETS	ELECTRICAL CONTRACTOR	ELECTRICAL CONTRACTOR
4	1.1 KV INSULATOR, MINIMUM HEIGHT 50 mm WITH 2 SETS OF BOLTS TO SUIT INSULATOR	EPOXY	2 SETS	ELECTRICAL CONTRACTOR	ELECTRICAL CONTRACTOR

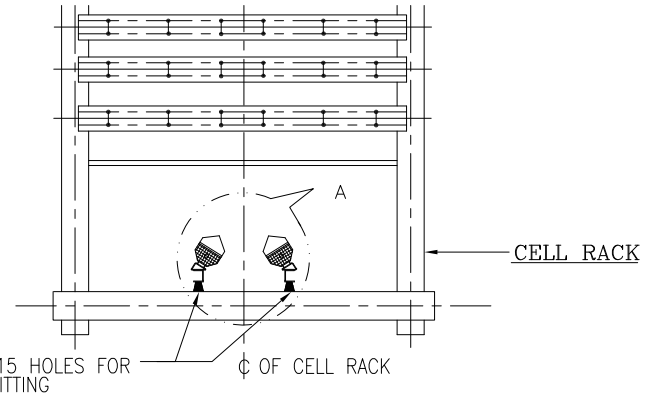

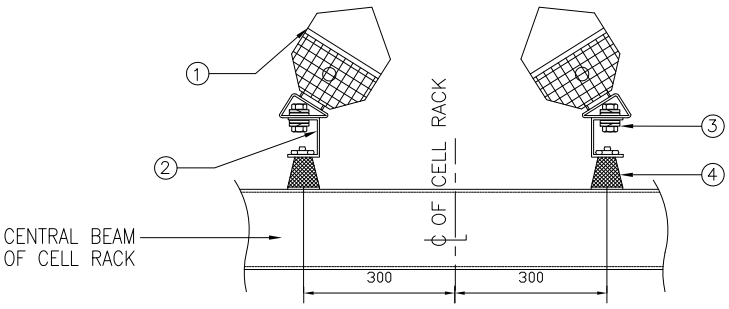

DETAIL 'A'

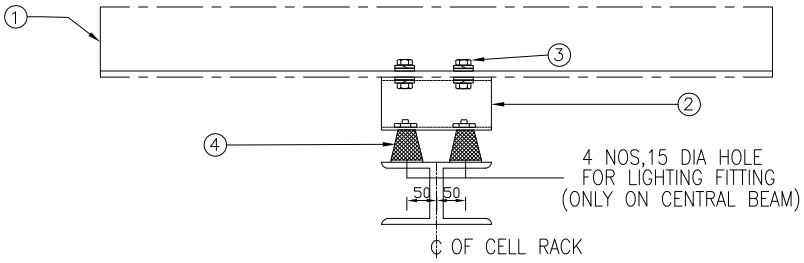

SUSPENSION OF FLUORESCENT LUMINAIRE

NOTE : INSULATORS SHALL HAVE ARRANGEMENT FOR BOLTING AT TOP & BOTTOM

DRAWING NOT TO SCALE

NOTES:–

1) ALL DIMENSION ARE IN 'mm' UNLESS OTHERWISE SPECIFIED.
2) THE SUPPORT SHALL BE PREFABRICATED AND PAINTED BEFORE INSTALLATION.
3) THE DETAILS (SIZE AND DIMENSIONS) SHALL BE VERIFIED WITH ORDERED LIGHTING FIXTURE.
4) SUPPLY & INSTALLATION OF STEEL IS NOT PART OF THIS INSTALLATION ARRANGEMENT. SAME IS COVERED ELSEWHERE.

Code	Contract No.	Document ID	Part	Rev.
		PIN–LEP–ELT–4003		00

Rev.	Date	Name (Drawn/Prepared)		Date	Name (Checked)		Date	Name (Approved)		Description	Acc. Code	Cat. Code	Acc. Code	Status
00	01/08/16	RDK	ANK	01/08/16	RPM		01/08/16	RPM		ISSUED AS STANDARD				

BAR–Code

Store Location: Server/Share

Store Location: Folder

Store Name LFLK1

Pro. Unit	TON	Group	Type of Document	Sheet
				1 / 1

Con. Unit	Scale	Order No.
	NTS	

thyssenkrupp

	Date	Name
Drawn	01/08/16	RDK
Prepared	01/08/16	ANK
Checked	01/08/16	RPM
Approved	01/08/16	RPM

Description

INSTALLATION STANDARDS – LIGHTING FLUORESCENT/LED LIGHTING FIXTURE FOR CELL RACK ILLUMINATION (LFLK1)

ISO A4

UH_BO_ISO_A4_P_E_tktSIndia.dwg / AG03_UH_BO_ISO_A4_P.dwg / 14.12.2016

© thyssenkrupp Industrial Solutions (India) Private Limited 2017. All rights reserved

ITEM	DESCRIPTION	MATERIAL	QTY.	SUPPLY BY	INSTALLATION BY
1	FLUORESCENT/LED LIGHT LUMINAIRE	–	1 NO.	CLIENT	ELECTRICAL CONTRACTOR
2	PREFABRICATED NB 80 (MEDIUM CLASS) PIPE (REFER NOTE–5)	H.D.G.I.	2.5 MTRS	ELECTRICAL CONTRACTOR	ELECTRICAL CONTRACTOR
3	PIPE CLAMP FOR NB 50 PIPE WITH M6x20 HEXAGONAL BOLT, NUTS & WASHERS	H.D.G.I.	2 SETS	ELECTRICAL CONTRACTOR	ELECTRICAL CONTRACTOR
4	ISMC 75	M.S. PAINTED	AS REQUIRED	REFER NOTE–4	
5	HEXAGONAL HEAD BOLT M10 X 30mm LONG, THREADS UPTO HEAD, WITH NUTS & WASHERS SUITABLE FOR ORDERED LIGHTING FIXTURE (REFER NOTE–3)	H.D.G.I.	2 SETS	ELECTRICAL CONTRACTOR	ELECTRICAL CONTRACTOR
6	U BOLT M10 SIZE THREADED AT THE END SUITABLE FOR NB 80 PIPE WITH NUT AND WASHERS	H.D.G.I.	4 SETS	ELECTRICAL CONTRACTOR	ELECTRICAL CONTRACTOR
7	80 NB x 50 NB REDUCER	H.D.G.I.	4 SETS	ELECTRICAL CONTRACTOR	ELECTRICAL CONTRACTOR
8	PREFABRICATED NB 50 (MEDIUM CLASS) PIPE (REFER NOTE–5)	H.D.G.I.	1.5 MTRS	ELECTRICAL CONTRACTOR	ELECTRICAL CONTRACTOR
9	EDGE PROTECTION FOR CABLE	RUBBER	1 NO.	ELECTRICAL CONTRACTOR	ELECTRICAL CONTRACTOR

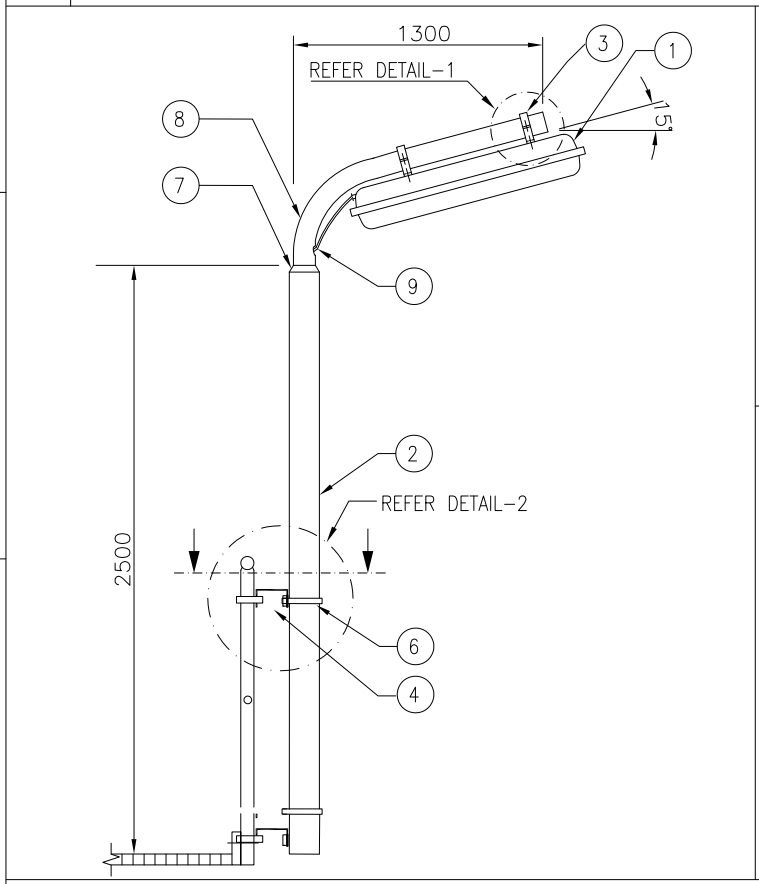

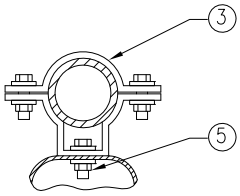

DETAIL–1

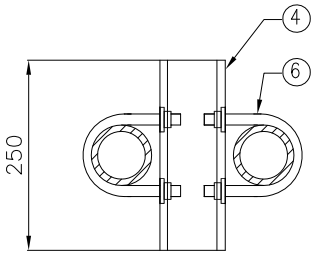

DETAIL–2

DRAWING NOT TO SCALE

NOTES:–

1) ALL DIMENSION ARE IN 'mm' UNLESS OTHERWISE SPECIFIED.
2) THE SUPPORT SHALL BE PREFABRICATED AND PAINTED BEFORE INSTALLATION.
3) THE DETAILS (SIZE AND DIMENSIONS) SHALL BE VERIFIED WITH ORDERED LIGHTING FIXTURE.
4) SUPPLY & INSTALLATION OF STEEL IS NOT PART OF THIS INSTALLATION ARRANGEMENT. SAME IS COVERED ELSEWHERE.
5) THE DETAILS (SIZE AND DIMENSIONS) SHALL BE VERIFIED WITH NB 50 & NB 80 PIPE.

Code	Contract No.	Document ID	Part	Rev.
		PIN–LEP–ELT–4003		00

Rev.	Date	Name (Drawn/Prepared)		Date	Name (Checked)		Date	Name (Approved)		Description	Acc. Code	Cat. Code	Acc. Code	Status
00	01/08/16	RDK	ANK	01/08/16	RPM		01/08/16	RPM		ISSUED AS STANDARD				

BAR–Code

Store Location: Server/Share

Store Location: Folder

Store Name LFLR1

Pro. Unit	TON	Group	Type of Document	Sheet
				1 / 1

Con. Unit	Scale	Order No.
	NTS	

thyssenkrupp

	Date	Name
Drawn	01/08/16	RDK
Prepared	01/08/16	ANK
Checked	01/08/16	RPM
Approved	01/08/16	RPM

Description
INSTALLATION STANDARDS – LIGHTING FLUORESCENT/LED LIGHTING FIXTURE ON POLE, ON STRUCTURAL STEEL RAILING (LFLR1)

ISO A4

© thyssenkrupp Industrial Solutions (India) Private Limited 2017. All rights reserved

UH_BO_ISO_A4_P_E_tkISIndia.dwg / AG03_UH_BO_ISO_A4_P.dwg / 14.12.2016
.2010... Uhde
document
50 mm

UH_BO_ISO_A4_P_E_tktSIndia.dwg / AG03_UH_BO_ISO_A4_P.dwg / 14.12.2016

ITEM	DESCRIPTION	MATERIAL	QTY.	SUPPLY BY	INSTALLATION BY
1	FLUORESCENT / LED LIGHTING FIXTURE	–	1 NO.	CLIENT	ELECTRICAL CONTRACTOR
2	ISMC 75	M.S. PAINTED	AS REQUIRED	REFER NOTE–3 & 4	
3	HEXAGONAL HEAD BOLT M10 X 30mm LONG, THREADS UPTO HEAD, WITH NUTS & WASHERS SUITABLE FOR CONNECTIONS SHOWN IN THIS DRAWING (REFER NOTE–3)	H.D.G.I.	2 SETS	ELECTRICAL CONTRACTOR	ELECTRICAL CONTRACTOR

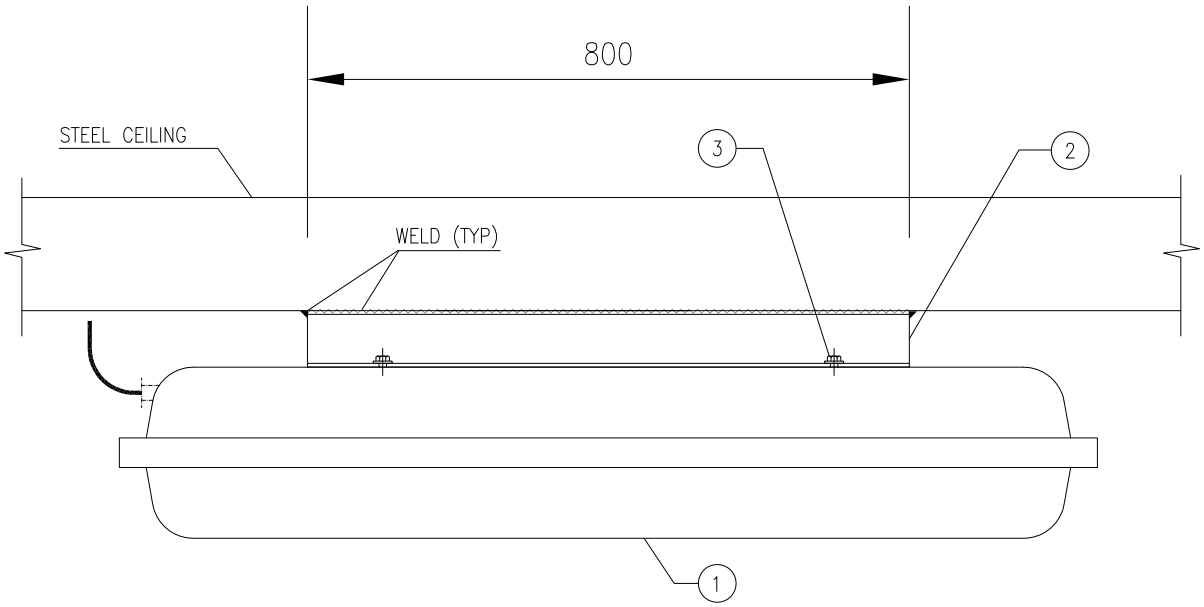

DRAWING NOT TO SCALE

NOTES:–

1) ALL DIMENSION ARE IN 'mm' UNLESS OTHERWISE SPECIFIED.
2) THE SUPPORT SHALL BE PREFABRICATED AND PAINTED BEFORE INSTALLATION. AREA AFFECTED DUE TO SITE WELDING SHALL BE CLEANED & PAINTED
3) THE DETAILS (SIZE AND DIMENSIONS) SHALL BE VERIFIED WITH ORDERED LIGHTING FIXTURE.
4) SUPPLY & INSTALLATION OF STEEL IS NOT PART OF THIS INSTALLATION ARRANGEMENT. SAME IS COVERED ELSEWHERE.

Code	Contract No.	Document ID	Part	Rev.
		PIN–LEP–ELT–4003		00

Rev.	Date	Name (Drawn/Prepared)		Date	Name (Checked)		Date	Name (Approved)	Description	Acc. Code	Cat. Code	Acc. Code	Status
00	01/08/16	RDK	ANK	01/08/16	RPM		01/08/16	RPM	ISSUED AS STANDARD				

BAR–Code

Store Location: Server/Share

Store Location: Folder

Store Name LFLS1

Pro. Unit	TON	Group	Type of Document	Sheet
				1 / 1

Con. Unit	Scale	Order No.
	NTS	

thyssenkrupp

	Date	Name
Drawn	01/08/16	RDK
Prepared	01/08/16	ANK
Checked	01/08/16	RPM
Approved	01/08/16	RPM

Description
INSTALLATION STANDARDS – LIGHTING FLUORESCENT/LED LIGHTING FIXTURE MOUNTED UNDER STEEL CEILING (LFLS1)

ISO A4

© thyssenkrupp Industrial Solutions (India) Private Limited 2017. All rights reserved

ITEM	DESCRIPTION	MATERIAL	QTY.	SUPPLY BY	INSTALLATION BY
1	FLUORESCENT / LED LIGHTING FIXTURE	–	1 NO.	CLIENT	ELECTRICAL CONTRACTOR
2	ISMC 75	M.S. PAINTED	AS REQUIRED	REFER NOTE–3 & 4	
3	HEXAGONAL HEAD BOLT M10 X 30mm LONG, THREADS UPTO HEAD, WITH NUTS & WASHERS SUITABLE FOR CONNECTIONS SHOWN IN THIS DRAWING	H.D.G.I.	2 SETS	ELECTRICAL CONTRACTOR	ELECTRICAL CONTRACTOR
4	HEXAGONAL HEAD BOLT M10 X 30mm LONG, THREADS UPTO HEAD, WITH NUTS & WASHERS SUITABLE FOR ORDERED LIGHTING FIXTURE (REFER NOTE–3)	H.D.G.I.	2 SETS	ELECTRICAL CONTRACTOR	ELECTRICAL CONTRACTOR
5	ISMC 75	M.S. PAINTED	AS REQUIRED	REFER NOTE–4 & 5	

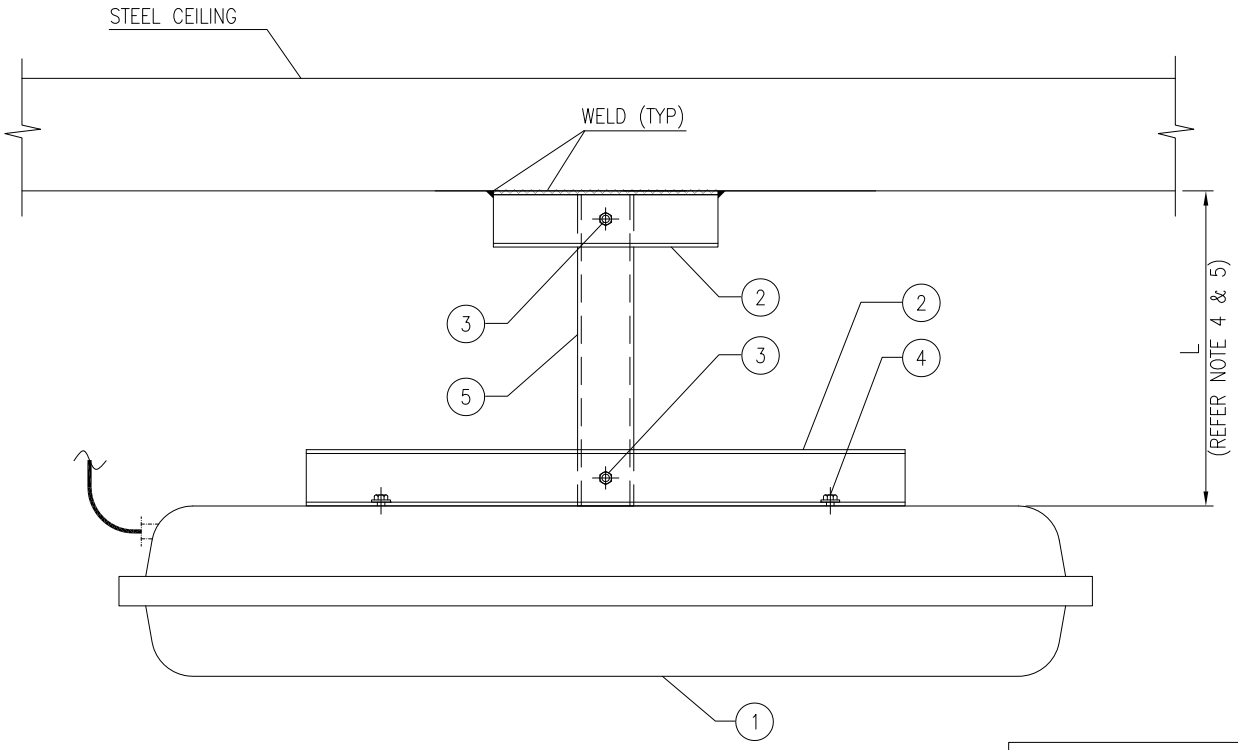

DRAWING NOT TO SCALE

NOTES:–

1) ALL DIMENSION ARE IN 'mm' UNLESS OTHERWISE SPECIFIED.
2) THE SUPPORT SHALL BE PREFABRICATED AND PAINTED BEFORE INSTALLATION. AREA AFFECTED DUE TO SITE WELDING SHALL BE CLEANED & PAINTED
3) THE DETAILS (SIZE AND DIMENSIONS) SHALL BE VERIFIED WITH ORDERED LIGHTING FIXTURE.
4) SUPPLY & INSTALLATION OF STEEL IS NOT PART OF THIS INSTALLATION ARRANGEMENT. SAME IS COVERED ELSEWHERE.
5) LENGTH OF ITEM 5 SHALL BE DECIDED WITH RESPECT TO LAYOUT DRAWING OR WITH CONSULTATION OF SITE ENGINEER. LENGTH SHALL BE RESTRICTED TO MAXIMUM 3 METERS.

Code	Contract No.	Document ID	Part	Rev.
		PIN–LEP–ELT–4003		00

Rev.	Date	Name (Drawn/Prepared)		Date	Name (Checked)		Date	Name (Approved)		Description	Acc. Code	Cat. Code	Acc. Code	Status
00	01/08/16	RDK	ANK	01/08/16	RPM		01/08/16	RPM		ISSUED AS STANDARD				

BAR–Code

Store Location: Server/Share

Store Location: Folder

Store Name LFLS2

Pro. Unit	TON	Group	Type of Document	Sheet
				1 / 1

Con. Unit	Scale	Order No.
	NTS	

thyssenkrupp

	Date	Name
Drawn	01/08/16	RDK
Prepared	01/08/16	ANK
Checked	01/08/16	RPM
Approved	01/08/16	RPM

Description
INSTALLATION STANDARDS – LIGHTING FLUORESCENT/LED LIGHTING FIXTURE SUSPENDED FROM STEEL CEILING (LFLS2)

ISO A4

UH_BO_ISO_A4_P_E_tktSIndia.dwg / AG03_UH_BO_ISO_A4_P.dwg / 14.12.2016

© thyssenkrupp Industrial Solutions (India) Private Limited 2017. All rights reserved

ITEM	DESCRIPTION	MATERIAL	QTY.	SUPPLY BY	INSTALLATION BY
1	FLUORESCENT/LED LIGHT LUMINAIRE	–	1 NO.	CLIENT	ELECTRICAL CONTRACTOR
2	PREFABRICATED NB 50 (MEDIUM CLASS) PIPE (REFER NOTE–5)	H.D.G.I.	2 METERS	ELECTRICAL CONTRACTOR	ELECTRICAL CONTRACTOR
3	PIPE CLAMP FOR NB 50 PIPE WITH M6x20 HEXAGONAL BOLT, NUTS & WASHERS	H.D.G.I.	2 SETS	ELECTRICAL CONTRACTOR	ELECTRICAL CONTRACTOR
4	ISMC 75	M.S. PAINTED	AS REQUIRED	REFER NOTE–3 & 4	
5	U BOLT M10 SIZE THREADED AT THE END SUITABLE FOR NB 50 PIPE WITH NUT AND WASHERS	H.D.G.I.	2 SETS	ELECTRICAL CONTRACTOR	ELECTRICAL CONTRACTOR
6	HEXAGONAL HEAD BOLT M10 X 30mm LONG, THREADS UPTO HEAD, WITH NUTS & WASHERS SUITABLE FOR ORDERED LIGHTING FIXTURE (REFER NOTE–3)	H.D.G.I.	2 SETS	ELECTRICAL CONTRACTOR	ELECTRICAL CONTRACTOR
7	EDGE PROTECTION FOR CABLE	RUBBER	1 NO.	ELECTRICAL CONTRACTOR	ELECTRICAL CONTRACTOR

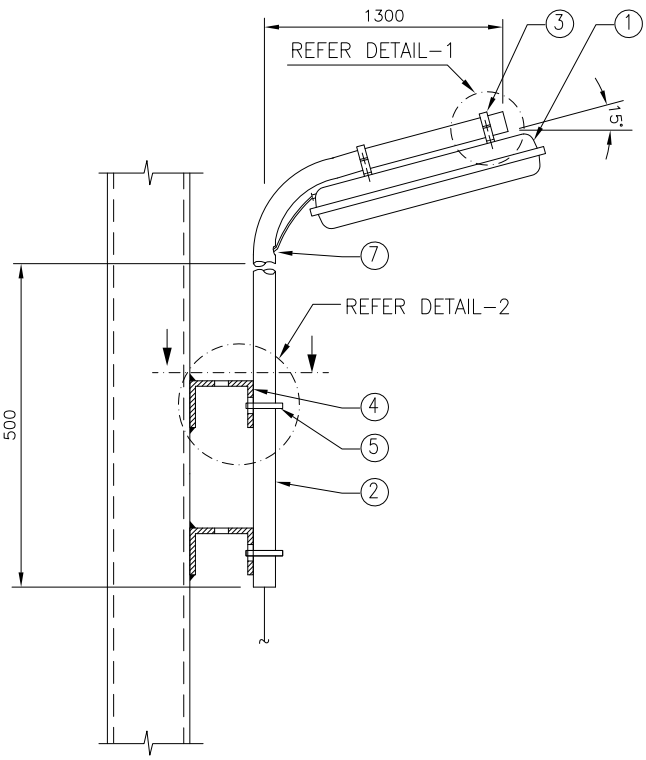

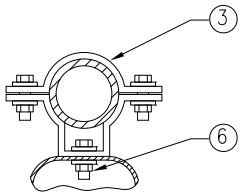

DETAIL–1

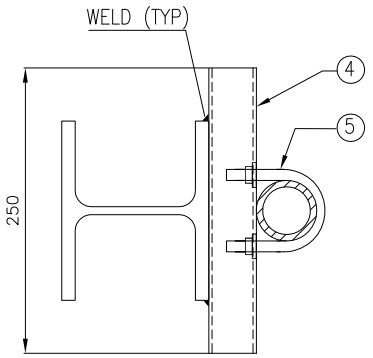

DETAIL–2

DRAWING NOT TO SCALE

NOTES:–

1) ALL DIMENSION ARE IN 'mm' UNLESS OTHERWISE SPECIFIED.
2) THE SUPPORT SHALL BE PREFABRICATED AND PAINTED BEFORE INSTALLATION. AREA AFFECTED DUE TO SITE WELDING SHALL BE CLEANED AND PAINTED.
3) THE DETAILS (SIZE AND DIMENSIONS) SHALL BE VERIFIED WITH ORDERED LIGHTING FIXTURE.
4) SUPPLY & INSTALLATION OF STEEL IS NOT PART OF THIS INSTALLATION ARRANGEMENT. SAME IS COVERED ELSEWHERE.
5) THE DETAILS (SIZE AND DIMENSIONS) SHALL BE VERIFIED WITH NB 50 & NB 80 PIPE.

Code	Contract No.	Document ID	Part	Rev.
		PIN–LEP–ELT–4003		00

Rev.	Date	Name (Drawn/Prepared)		Date	Name (Checked)		Date	Name (Approved)		Description	Acc. Code	Cat. Code	Acc. Code	Status
00	01/08/16	RDK	ANK	01/08/16	RPM		01/08/16	RPM		ISSUED AS STANDARD				

BAR–Code

Store Location: Server/Share

Store Location: Folder

Store Name LFLS3

Pro. Unit	TON	Group	Type of Document	Sheet
				1 / 1

Con. Unit	Scale	Order No.
	NTS	

thyssenkrupp

	Date	Name
Drawn	01/08/16	RDK
Prepared	01/08/16	ANK
Checked	01/08/16	RPM
Approved	01/08/16	RPM

Description
INSTALLATION STANDARDS – LIGHTING FLUORESCENT/LED LIGHTING FIXTURE ON POLE, BRACKET ON STEEL COLUMN (LFLS3)

ISO A4

UH_BO_ISO_A4_P_E_tktSIndia.dwg / AG03_UH_BO_ISO_A4_P.dwg / 14.12.2016

© thyssenkrupp Industrial Solutions (India) Private Limited 2017. All rights reserved

UH_BO_ISO_A4_P_E_tktlSindia.dwg / AG03_UH_BO_ISO_A4_P.dwg / 14.12.2016

ITEM	DESCRIPTION	MATERIAL	QTY.	SUPPLY BY	INSTALLATION BY
1	FLUORESCENT / LED LIGHTING FIXTURE	–	1 NO.	CLIENT	ELECTRICAL CONTRACTOR
2	MUSHROOM HEAD BOLT M10 X 30mm LONG, THREADS UPTO HEAD, WITH NUTS & WASHERS SUITABLE FOR CONNECTIONS SHOWN IN THIS DRAWING (REFER NOTE–2)	H.D.G.I.	2 SETS	ELECTRICAL CONTRACTOR	ELECTRICAL CONTRACTOR

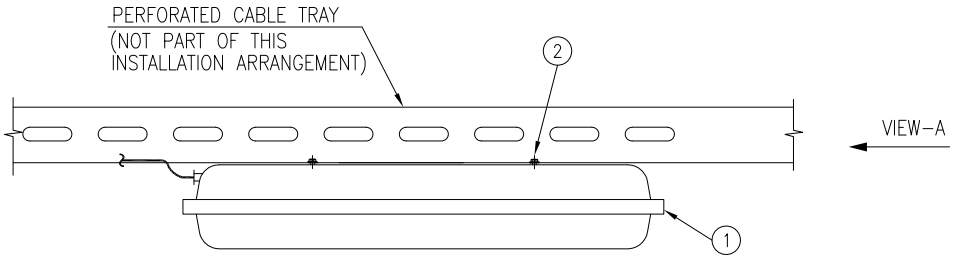

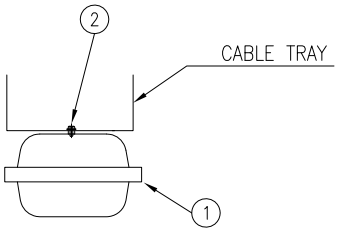

VIEW–A

DRAWING NOT TO SCALE

NOTES:–

1) ALL DIMENSION ARE IN 'mm' UNLESS OTHERWISE SPECIFIED.
2) THE DETAILS (SIZE AND DIMENSIONS) SHALL BE VERIFIED WITH ORDERED LIGHTING FIXTURE.

Code	Contract No.	Document ID	Part	Rev.
		PIN–LEP–ELT–4003		00

Rev.	Date	Name (Drawn/Prepared)	Date	Name (Checked)	Date	Name (Approved)	Description	Acc. Code	Cat. Code	Acc. Code	Status
00	01/08/16	RDK	01/08/16	ANK	01/08/16	RPM	01/08/16	RPM	ISSUED AS STANDARD				

BAR–Code

Store Location: Server/Share

Store Location: Folder

Store Name LFLT1

Pro. Unit	TON	Group	Type of Document	Sheet
				1 / 1

Con. Unit	Scale	Order No.
	NTS	

thyssenkrupp

	Date	Name
Drawn	01/08/16	RDK
Prepared	01/08/16	ANK
Checked	01/08/16	RPM
Approved	01/08/16	RPM

Description
INSTALLATION STANDARDS – LIGHTING LED/FLUORESCENT LIGHTING FIXTURE SUPPORTED FROM CABLE TRAY (LFLT1)

ISO A4

© thyssenkrupp Industrial Solutions (India) Private Limited 2017. All rights reserved

ITEM	DESCRIPTION	MATERIAL	QTY.	SUPPLY BY	INSTALLATION BY
1	HIGH/MEDIUM/LOW BAY LIGHTING FIXTURE	–	1 NO.	CLIENT	ELECTRICAL CONTRACTOR
2	ISMC 75	M.S. PAINTED	AS REQUIRED	REFER NOTE–3 & 4	
3	BRACKET AS INDICATED IN DETAIL–2 MADE OF 40 x 6mm FLAT STRIP (REFER NOTE–6)	H.D.G.I.	1 NO.	ELECTRICAL CONTRACTOR	ELECTRICAL CONTRACTOR
4	HEXAGONAL HEAD BOLT M10 X 30mm LONG, THREADS UPTO HEAD, WITH NUTS & WASHERS SUITABLE FOR CONNECTIONS SHOWN IN THIS DRAWING	H.D.G.I.	2 SETS	ELECTRICAL CONTRACTOR	ELECTRICAL CONTRACTOR
5	HEXAGONAL HEAD BOLT M12 X 30mm LONG, THREADS UPTO HEAD, WITH NUTS & WASHERS SUITABLE FOR CONNECTIONS SHOWN IN THIS DRAWING	H.D.G.I.	2 SETS	ELECTRICAL CONTRACTOR	ELECTRICAL CONTRACTOR
6	M8 x 60mm LONG ANCHOR FASTENER, WITH SUITABLE NUT & WASHERS	GALVANISED STEEL/SS	2 SETS	ELECTRICAL CONTRACTOR	ELECTRICAL CONTRACTOR
7	HEXAGONAL HEAD BOLT M12 X 30mm LONG, THREADS UPTO HEAD, WITH NUTS & WASHERS SUITABLE FOR ORDERED LIGHTING FIXTURE (REFER NOTE–7)	H.D.G.I.	1 SET	ELECTRICAL CONTRACTOR	ELECTRICAL CONTRACTOR
8	ISMC 75	M.S. PAINTED	AS REQUIRED	REFER NOTE–4 & 5	

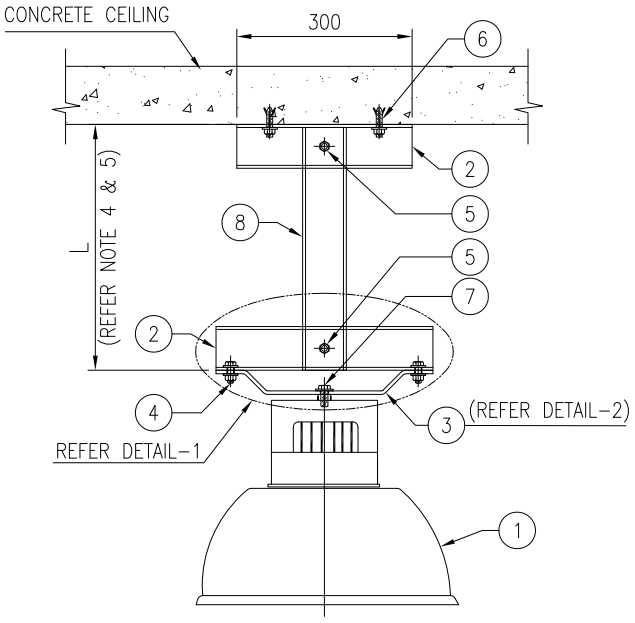

FRONT VIEW

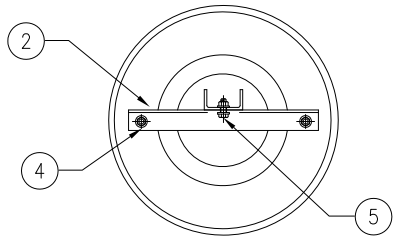

DETAIL–1
(PLAN VIEW)

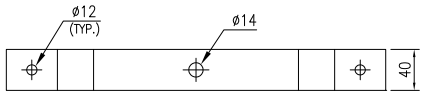

PLAN : DETAIL–2

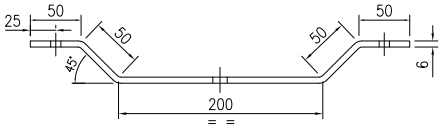

DETAIL–2

DRAWING NOT TO SCALE

NOTES:–

1) ALL DIMENSION ARE IN 'mm' UNLESS OTHERWISE SPECIFIED.
2) THE SUPPORT SHALL BE PREFABRICATED AND PAINTED BEFORE INSTALLATION.
3) THE DETAILS (SIZE AND DIMENSIONS) SHALL BE VERIFIED WITH ORDERED LIGHTING FIXTURE.
4) SUPPLY & INSTALLATION OF STEEL IS NOT PART OF THIS INSTALLATION ARRANGEMENT. SAME IS COVERED ELSEWHERE.
5) LENGTH OF ITEM 8 SHALL BE DECIDED WITH RESPECT TO LAYOUT DRAWING OR WITH CONSULTATION OF SITE ENGINEER. LENGTH SHALL BE RESTRICTED TO MAXIMUM 3 METERS.
6) THE DIMENSIONS FOR ITEM–3 AND DETAILS OF HOLES (LOCATION & DIA) SHALL BE VERIFIED WITH THE ORDERED LIGHTING FIXTURE.
7) THE QUANTITY & SIZE OF THE HEXAGONAL HEAD BOLT (ITEM–7) REQUIRED FOR CONNECTION OF ITEM–3 TO THE LIGHTING FIXTURE SHALL BE VERIFIED WITH THE ORDERED LIGHTING FIXTURE.

Code	Contract No.	Document ID	Part	Rev.
		PIN–LEP–ELT–4003		00

Rev.	Date	Name (Drawn/Prepared)		Date	Name (Checked)		Date	Name (Approved)		Description	Acc. Code	Cat. Code	Acc. Code	Status
00	01/08/16	RDK	ANK	01/08/16	RPM		01/08/16	RPM		ISSUED AS STANDARD				

BAR–Code

Store Location: Server/Share

Store Location: Folder

Store Name LHBC1

Pro. Unit	TON	Group	Type of Document	Sheet
				1 / 1

Con. Unit	Scale	Order No.
	NTS	

thyssenkrupp

	Date	Name
Drawn	01/08/16	RDK
Prepared	01/08/16	ANK
Checked	01/08/16	RPM
Approved	01/08/16	RPM

Description
INSTALLATION STANDARDS – LIGHTING HIGH/MEDIUM/LOW BAY FIXTURE ON BRACKET, ON CONCRETE CEILING (LHBC1)

ISO A4

UH_BO_ISO_A4_P_E_tkISIndia.dwg / AG03_UH_BO_ISO_A4_P.dwg / 14.12.2016

© thyssenkrupp Industrial Solutions (India) Private Limited 2017. All rights reserved

UH_BO_ISO_A4_P_E_tktSIndia.dwg / AG03_UH_BO_ISO_A4_P.dwg / 14.12.2016

ITEM	DESCRIPTION	MATERIAL	QTY.	SUPPLY BY	INSTALLATION BY
1	HIGH/MEDIUM/LOW BAY LIGHTING FIXTURE	–	1 NO.	CLIENT	ELECTRICAL CONTRACTOR
2	ISMC 75	M.S. PAINTED	AS REQUIRED	REFER NOTE–3 & 4	
3	BRACKET AS INDICATED IN DETAIL–2 MADE OF 40 x 6mm FLAT STRIP (REFER NOTE–6)	H.D.G.I.	1 NO.	ELECTRICAL CONTRACTOR	ELECTRICAL CONTRACTOR
4	HEXAGONAL HEAD BOLT M10 X 30mm LONG, THREADS UPTO HEAD, WITH NUTS & WASHERS SUITABLE FOR CONNECTIONS SHOWN IN THIS DRAWING	H.D.G.I.	2 SETS	ELECTRICAL CONTRACTOR	ELECTRICAL CONTRACTOR
5	HEXAGONAL HEAD BOLT M12 X 30mm LONG, THREADS UPTO HEAD, WITH NUTS & WASHERS SUITABLE FOR CONNECTIONS SHOWN IN THIS DRAWING	H.D.G.I.	2 SETS	ELECTRICAL CONTRACTOR	ELECTRICAL CONTRACTOR
6	HEXAGONAL HEAD BOLT M12 X 30mm LONG, THREADS UPTO HEAD, WITH NUTS & WASHERS SUITABLE FOR ORDERED LIGHTING FIXTURE (REFER NOTE–7)	H.D.G.I.	1 SET	ELECTRICAL CONTRACTOR	ELECTRICAL CONTRACTOR
7	ISMC 75	M.S. PAINTED	AS REQUIRED	REFER NOTE–4 & 5	

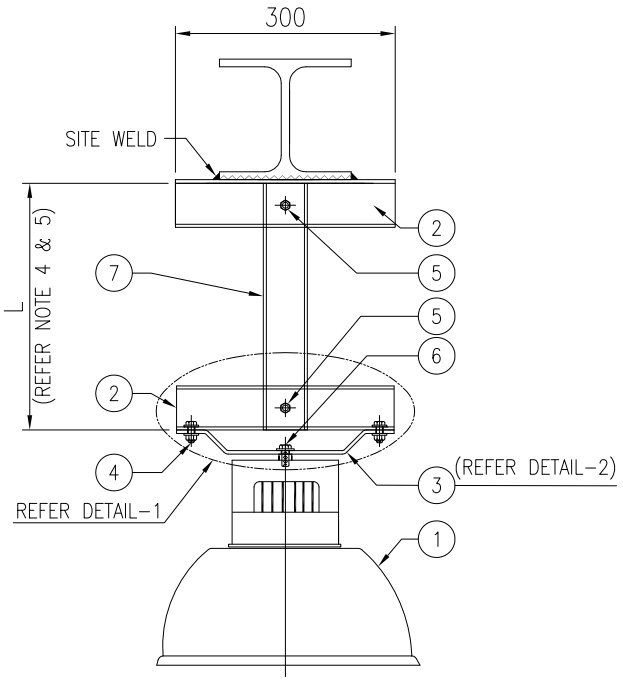

FRONT VIEW

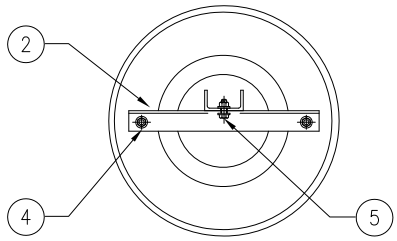

DETAIL–1
(PLAN VIEW)

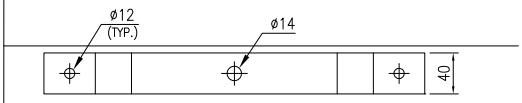

PLAN : DETAIL–2

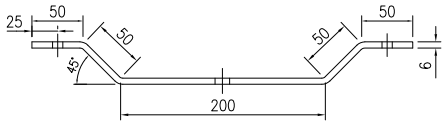

DETAIL–2

DRAWING NOT TO SCALE

NOTES:–

1) ALL DIMENSION ARE IN 'mm' UNLESS OTHERWISE SPECIFIED.
2) THE SUPPORT SHALL BE PREFABRICATED AND PAINTED BEFORE INSTALLATION. AREA AFFECTED DUE TO SITE WELDING SHALL BE CLEANED & PAINTED
3) THE DETAILS (SIZE AND DIMENSIONS) SHALL BE VERIFIED WITH ORDERED LIGHTING FIXTURE.
4) SUPPLY & INSTALLATION OF STEEL IS NOT PART OF THIS INSTALLATION ARRANGEMENT. SAME IS COVERED ELSEWHERE.
5) LENGTH OF ITEM 7 SHALL BE DECIDED WITH RESPECT TO LAYOUT DRAWING OR WITH CONSULTATION OF SITE ENGINEER. LENGTH SHALL BE RESTRICTED TO MAXIMUM 3 METERS.
6) THE DIMENSIONS FOR ITEM–3 AND DETAILS OF HOLES (LOCATION & DIA) SHALL BE VERIFIED WITH THE ORDERED LIGHTING FIXTURE.
7) THE QUANTITY & SIZE OF THE HEXAGONAL HEAD BOLT (ITEM–6) REQUIRED FOR CONNECTION OF ITEM–3 TO THE LIGHTING FIXTURE SHALL BE VERIFIED WITH THE ORDERED LIGHTING FIXTURE.

Code	Contract No.	Document ID	Part	Rev.
		PIN–LEP–ELT–4003		00

Rev.	Date	Name (Drawn/Prepared)	Date	Name (Checked)	Date	Name (Approved)	Description	Acc. Code	Cat. Code	Acc. Code	Status
00	01/08/16	RDK	01/08/16	ANK	01/08/16	RPM	01/08/16	RPM	ISSUED AS STANDARD				

BAR–Code

Store Location: Server/Share

Store Location: Folder

Store Name LHBS1

Pro. Unit	TON	Group	Type of Document	Sheet
				1 / 1

Con. Unit	Scale	Order No.
	NTS	

thyssenkrupp

	Date	Name
Drawn	01/08/16	RDK
Prepared	01/08/16	ANK
Checked	01/08/16	RPM
Approved	01/08/16	RPM

Description
INSTALLATION STANDARDS – LIGHTING HIGH/MEDIUM/LOW BAY FIXTURE ON BRACKET, ON STRUCTURAL STEEL BEAM (LHBS1)

ISO A4

© thyssenkrupp Industrial Solutions (India) Private Limited 2017. All rights reserved

ITEM	DESCRIPTION	MATERIAL	QTY.	SUPPLY BY	INSTALLATION BY
1	STREET LIGHTING FIXTURE	–	1 NO.	CLIENT	ELECTRICAL CONTRACTOR
4	ISMC 75	M.S. PAINTED	AS REQUIRED	REFER NOTE–3 & 4	
3	U BOLT M10 SIZE THREADED AT THE END SUITABLE FOR PIPE OF STREET LIGHTING FIXTURE (REFER NOTE–5)	H.D.G.I.	2 SETS	ELECTRICAL CONTRACTOR	ELECTRICAL CONTRACTOR
4	ADAPTER OR REDUCER TO SUIT LIGHTING FIXTURE	H.D.G.I.	1 NO.	ELECTRICAL CONTRACTOR	ELECTRICAL CONTRACTOR
5	M8 x 60mm LONG ANCHOR FASTENER, WITH SUITABLE NUT & WASHERS	GALVANISED STEEL/SS	4 SETS	ELECTRICAL CONTRACTOR	ELECTRICAL CONTRACTOR

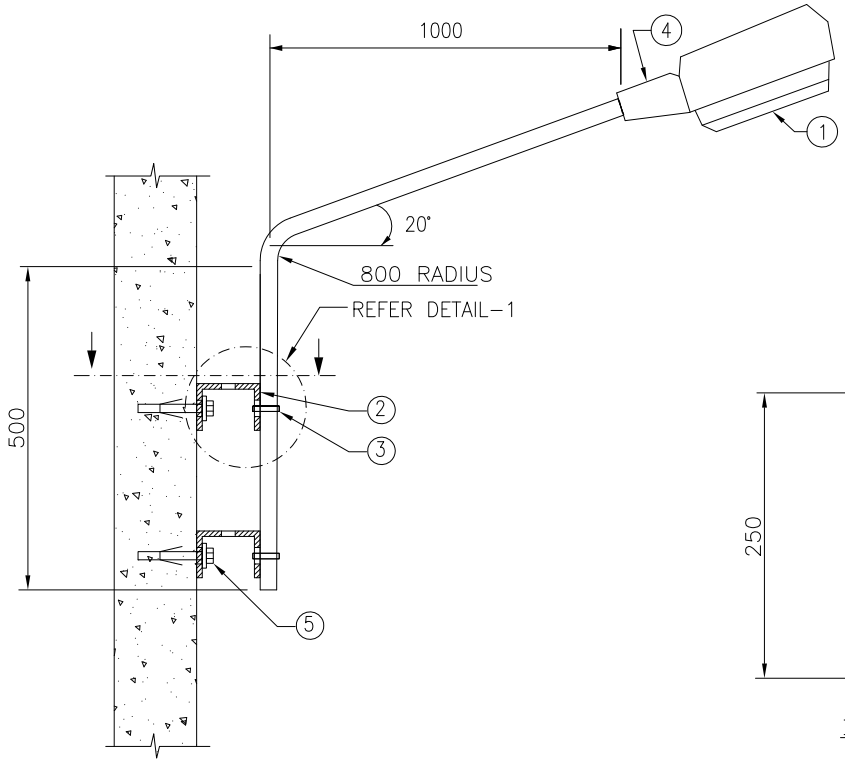

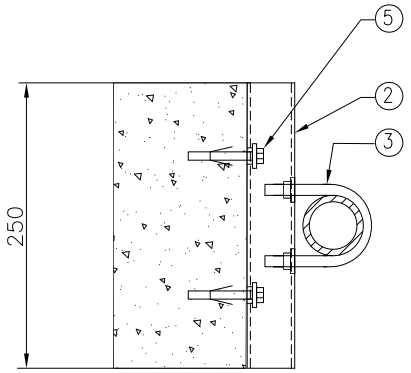

DETAIL–1

DRAWING NOT TO SCALE

NOTES:–

1) ALL DIMENSION ARE IN 'mm' UNLESS OTHERWISE SPECIFIED.
2) THE SUPPORT SHALL BE PREFABRICATED AND PAINTED BEFORE INSTALLATION.
3) THE DETAILS (SIZE AND DIMENSIONS) SHALL BE VERIFIED WITH ORDERED LIGHTING FIXTURE.
4) SUPPLY & INSTALLATION OF STEEL IS NOT PART OF THIS INSTALLATION ARRANGEMENT. SAME IS COVERED ELSEWHERE.
5) THE DETAILS (SIZE AND DIMENSIONS) SHALL BE VERIFIED PIPE OF STREET LIGHTING FIXTURE.

Code	Contract No.	Document ID	Part	Rev.
		PIN–LEP–ELT–4003		00

Rev.	Date	Name (Drawn/Prepared)		Date	Name (Checked)		Date	Name (Approved)		Description	Acc. Code	Cat. Code	Acc. Code	Status
00	01/08/16	RDK	ANK	01/08/16	RPM		01/08/16	RPM		ISSUED AS STANDARD				

BAR–Code

Store Location: Server/Share

Store Location: Folder

Store Name LSTC1

Pro. Unit	TON	Group	Type of Document	Sheet
				1 / 1

Con. Unit	Scale	Order No.
	NTS	

thyssenkrupp

	Date	Name
Drawn	01/08/16	RDK
Prepared	01/08/16	ANK
Checked	01/08/16	RPM
Approved	01/08/16	RPM

Description
INSTALLATION STANDARDS – LIGHTING STREET LIGHTING FIXTURE ON WALL/COLUMN (LSTC1)

ISO A4

UH_BO_ISO_A4_P_E_tktSIndia.dwg / AG03_UH_BO_ISO_A4_P.dwg / 14.12.2016

© thyssenkrupp Industrial Solutions (India) Private Limited 2017. All rights reserved

ITEM	DESCRIPTION	MATERIAL	QTY.	SUPPLY BY	INSTALLATION BY
1	STREET LIGHTING FIXTURE	–	1 NO.	CLIENT	ELECTRICAL CONTRACTOR
2	STREET LIGHTING POLE	STEEL OF MIN TENSILE STRENGTH 410MPa	1 NO.	ELECTRICAL CONTRACTOR	ELECTRICAL CONTRACTOR
3	JUNCTION BOX	H.D.G.I.	1 NO.	ELECTRICAL CONTRACTOR	ELECTRICAL CONTRACTOR
4	ISA 50 (50X50X6mm)	MS PAINTED	AS REQUIRED	REFER NOTE–4	
5	25 x 3mm FLAT STEEL STRIP BENT AS INDICATED IN DETAIL–A WITH 2 NOS. 12 ø HOLES	MS PAINTED	AS REQUIRED	REFER NOTE–4	
6	25mm ø 750mm LONG EARTH ROD (FOR EARTHING)	H.D.G.I.	1 NO.	ELECTRICAL CONTRACTOR	ELECTRICAL CONTRACTOR
7	75mm ø PIPE SLEEVE WITH R=800 (L=AS REQD.)	H.D.G.I.	2 NOS.	ELECTRICAL CONTRACTOR	ELECTRICAL CONTRACTOR
8	EARTHING CONDR. WITH LUG AND FIXING HARDWARE. SIZE OF EARTHING CONDR. & MATERIAL SHALL BE AS PER THE 'EARTHING SCHEDULE' FOR THE PROJECT.	–	AS REQUIRED	ELECTRICAL CONTRACTOR	ELECTRICAL CONTRACTOR
9	CONCRETE MATERIAL AS INDICATED FOR BASE & SQUARE SHAPE FOUNDATION, BITUMEN & MISCELLANEOUS MATERIAL AS REQUIRED	–	1 LOT	ELECTRICAL CONTRACTOR	ELECTRICAL CONTRACTOR

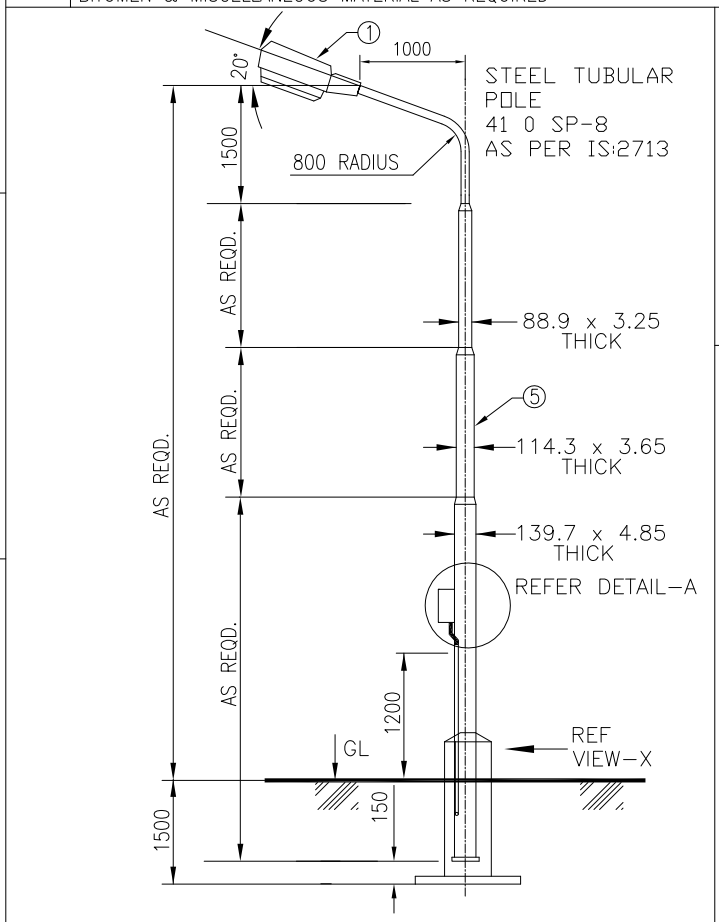

DRAWING NOT TO SCALE

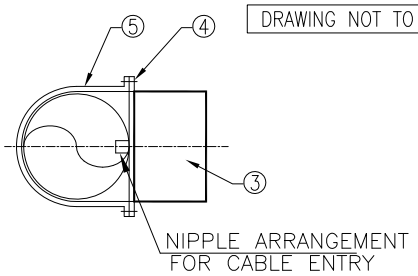

PLAN : DETAIL–A

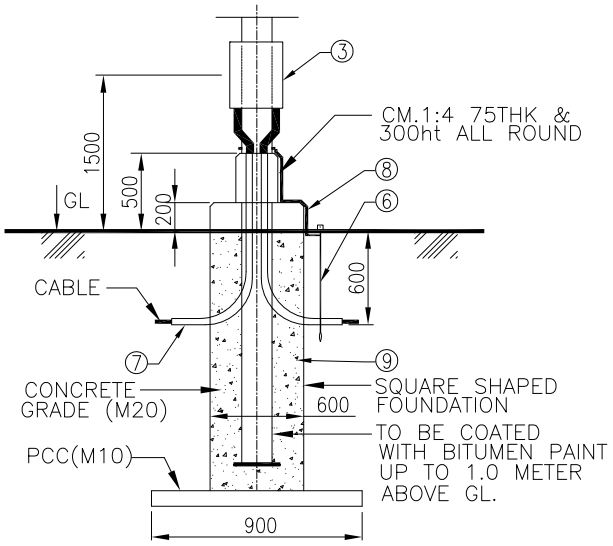

VIEW–X

NOTES:– 1) ALL DIMENSION ARE IN 'mm' UNLESS OTHERWISE SPECIFIED.
2) THE SUPPORT SHALL BE PREFABRICATED AND PAINTED BEFORE INSTALLATION.
3) REQUIRED CIVIL WORK AS SHOWN IN DRAWING SHALL BE IN ELECTRICAL CONTRACTORS SCOPE
4) SUPPLY & INSTALLATION OF STEEL IS NOT PART OF THIS INSTALLATION ARRANGEMENT. SAME IS COVERED ELSEWHERE.

Code	Contract No.	Document ID	Part	Rev.
		PIN–LEP–ELT–4003		00

Rev.	Date	Name (Drawn/Prepared)		Date	Name (Checked)		Date	Name (Approved)	Description	Acc. Code	Cat. Code	Acc. Code	Status
00	12/02/16	RDK	ANK	12/02/16	RPM		12/02/16	RPM	ISSUED AS STANDARD				

BAR–Code

Store Location: Server/Share

Store Location: Folder

Store Name LSTP1

Pro. Unit	TON	Group	Type of Document	Sheet
				1 / 1

Con. Unit	Scale	Order No.
	NTS	

thyssenkrupp

	Date	Name
Drawn	12/02/16	RDK
Prepared	12/02/16	ANK
Checked	12/02/16	RPM
Approved	12/02/16	RPM

Description
INSTALLATION STANDARDS – LIGHTING STREET LIGHTING FIXTURE ON STREET LIGHT POLE (LSTP1)

ISO A4

UH_BO_ISO_A4_P_E_tktSIndia.dwg / AG03_UH_BO_ISO_A4_P.dwg / 14.12.2016

© thyssenkrupp Industrial Solutions (India) Private Limited 2017. All rights reserved

ITEM	DESCRIPTION	MATERIAL	QTY.	SUPPLY BY	INSTALLATION BY
1	STREET LIGHTING FIXTURE	–	1 NO.	CLIENT	ELECTRICAL CONTRACTOR
4	ISMC 75	M.S. PAINTED	AS REQUIRED	REFER NOTE–3 & 4	
3	U BOLT M10 SIZE THREADED AT THE END SUITABLE FOR PIPE OF STREET LIGHTING FIXTURE (REFER NOTE–5)	H.D.G.I.	2 SETS	ELECTRICAL CONTRACTOR	ELECTRICAL CONTRACTOR
4	ADAPTER OR REDUCER TO SUIT LIGHTING FIXTURE	H.D.G.I.	1 NO.	ELECTRICAL CONTRACTOR	ELECTRICAL CONTRACTOR

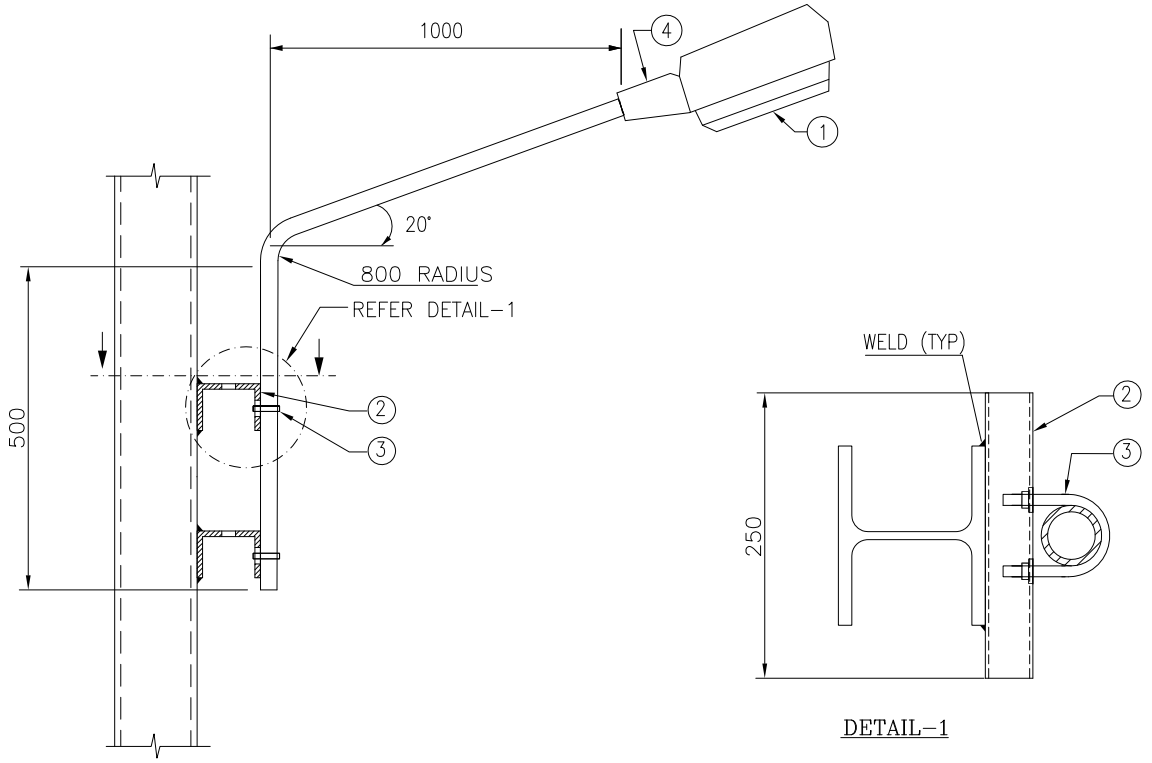

DRAWING NOT TO SCALE

NOTES:–

1) ALL DIMENSION ARE IN 'mm' UNLESS OTHERWISE SPECIFIED.
2) THE SUPPORT SHALL BE PREFABRICATED AND PAINTED BEFORE INSTALLATION. AREA AFFECTED DUE TO SITE WELDING SHALL BE CLEANED AND PAINTED.
3) THE DETAILS (SIZE AND DIMENSIONS) SHALL BE VERIFIED WITH ORDERED LIGHTING FIXTURE.
4) SUPPLY & INSTALLATION OF STEEL IS NOT PART OF THIS INSTALLATION ARRANGEMENT. SAME IS COVERED ELSEWHERE.
5) THE DETAILS (SIZE AND DIMENSIONS) SHALL BE VERIFIED PIPE OF STREET LIGHTING FIXTURE.

Code	Contract No.	Document ID	Part	Rev.
		PIN–LEP–ELT–4003		00

Rev.	Date	Name (Drawn/Prepared)		Date	Name (Checked)		Date	Name (Approved)		Description	Acc. Code	Cat. Code	Acc. Code	Status
00	01/08/16	RDK	ANK	01/08/16	RPM		01/08/16	RPM		ISSUED AS STANDARD				

BAR–Code

Store Location: Server/Share

Store Location: Folder

Store Name LSTS1

Pro. Unit	TON	Group	Type of Document	Sheet
				1 / 1

Con. Unit	Scale	Order No.
	NTS	

thyssenkrupp

	Date	Name
Drawn	01/08/16	RDK
Prepared	01/08/16	ANK
Checked	01/08/16	RPM
Approved	01/08/16	RPM

Description
INSTALLATION STANDARDS – LIGHTING STREET LIGHTING FIXTURE ON STRUCTURAL STEEL COLUMN (LSTS1)

ISO A4

UH_BO_ISO_A4_P_E_tktSIndia.dwg / AG03_UH_BO_ISO_A4_P.dwg / 14.12.2016

© thyssenkrupp Industrial Solutions (India) Private Limited 2017. All rights reserved

UH_BO_ISO_A4_P_E_tktSIndia.dwg / AG03_UH_LBO_ISO_A4_P.dwg / 14.12.2016

ITEM	DESCRIPTION	MATERIAL	QTY.	SUPPLY BY	INSTALLATION BY
1	WELL GLASS LIGHTING FIXTURE	–	1 NO.	CLIENT	ELECTRICAL CONTRACTOR
2	ISMC 75	M.S. PAINTED	AS REQUIRED	REFER NOTE–3 & 4	
3	BRACKET AS INDICATED IN DETAIL–1 MADE OF 40 x 6mm FLAT STRIP (REFER NOTE–5)	H.D.G.I.	1 NO.	ELECTRICAL CONTRACTOR	ELECTRICAL CONTRACTOR
4	HEXAGONAL HEAD BOLT M10 X 30mm LONG, THREADS UPTO HEAD, WITH NUTS & WASHERS SUITABLE FOR CONNECTIONS SHOWN IN THIS DRAWING	H.D.G.I.	2 SETS	ELECTRICAL CONTRACTOR	ELECTRICAL CONTRACTOR
5	HEXAGONAL HEAD BOLT M12 X 30mm LONG, THREADS UPTO HEAD, WITH NUTS & WASHERS SUITABLE FOR ORDERED LIGHTING FIXTURE (REFER NOTE–6)	H.D.G.I.	1 SET	ELECTRICAL CONTRACTOR	ELECTRICAL CONTRACTOR
6	150 x 150 X 10mm THK PLATE	M.S. PAINTED	1 NO.	REFER NOTE–4	
7	M8 x 60mm LONG ANCHOR FASTENER, WITH SUITABLE NUT & WASHERS	GALVANISED STEEL/SS	2 SETS	ELECTRICAL CONTRACTOR	ELECTRICAL CONTRACTOR

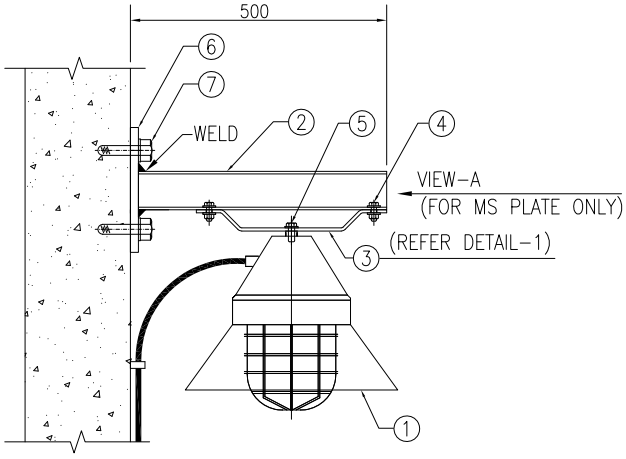

SIDE VIEW

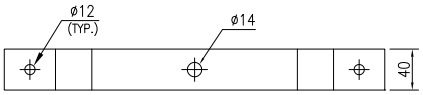

PLAN : DETAIL–1

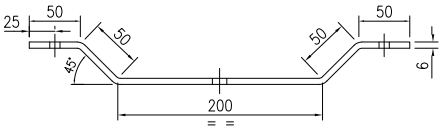

DETAIL–1

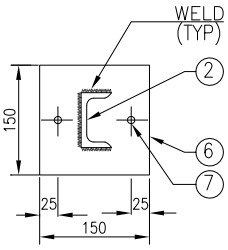

VIEW–A

DRAWING NOT TO SCALE

NOTES:–

1) ALL DIMENSION ARE IN 'mm' UNLESS OTHERWISE SPECIFIED.
2) THE SUPPORT SHALL BE PREFABRICATED AND PAINTED BEFORE INSTALLATION. AREA AFFECTED DUE TO SITE WELDING SHALL BE CLEANED & PAINTED
3) THE DETAILS (SIZE AND DIMENSIONS) SHALL BE VERIFIED WITH ORDERED LIGHTING FIXTURE.
4) SUPPLY & INSTALLATION OF STEEL IS NOT PART OF THIS INSTALLATION ARRANGEMENT. SAME IS COVERED ELSEWHERE.
5) THE DIMENSIONS FOR ITEM–3 AND DETAILS OF HOLES (LOCATION & DIA) SHALL BE VERIFIED WITH THE ORDERED LIGHTING FIXTURE.
6) THE QUANTITY & SIZE OF THE HEXAGONAL HEAD BOLT (ITEM–5) REQUIRED FOR CONNECTION OF ITEM–3 TO THE LIGHTING FIXTURE SHALL BE VERIFIED WITH THE ORDERED LIGHTING FIXTURE.

Code	Contract No.	Document ID	Part	Rev.
		PIN–LEP–ELT–4003		00

Rev.	Date	Name (Drawn/Prepared)	Date	Name (Checked)	Date	Name (Approved)	Description	Acc. Code	Cat. Code	Acc. Code	Status
00	12/02/16	RDK	12/02/16	ANK	12/02/16	RPM	12/02/16	RPM	ISSUED AS STANDARD				

BAR–Code

Store Location: Server/Share

Store Location: Folder

Store Name LWGC1

Pro. Unit	TON	Group	Type of Document	Sheet
				1 / 1

Con. Unit	Scale	Order No.
	NTS	

thyssenkrupp

	Date	Name
Drawn	12/02/16	RDK
Prepared	12/02/16	ANK
Checked	12/02/16	RPM
Approved	12/02/16	RPM

Description
INSTALLATION STANDARDS – LIGHTING WELL GLASS FIXTURE ON BRACKET, ON CONCRETE WALL/COLUMN (LWGC1)

ISO A4

© thyssenkrupp Industrial Solutions (India) Private Limited 2017. All rights reserved

ITEM	DESCRIPTION	MATERIAL	QTY.	SUPPLY BY	INSTALLATION BY
1	WELL GLASS LIGHTING FIXTURE	–	1 NO.	CLIENT	ELECTRICAL CONTRACTOR
2	BRACKET AS INDICATED IN DETAIL–1 MADE OF 40 x 6mm FLAT STRIP (REFER NOTE–4)	H.D.G.I.	1 NO.	ELECTRICAL CONTRACTOR	ELECTRICAL CONTRACTOR
3	M8 x 60mm LONG ANCHOR FASTENER, WITH SUITABLE NUT & WASHERS	GALVANISED STEEL/SS	2 SETS	ELECTRICAL CONTRACTOR	ELECTRICAL CONTRACTOR
4	HEXAGONAL HEAD BOLT M12 X 30mm LONG, THREADS UPTO HEAD, WITH NUTS & WASHERS SUITABLE FOR ORDERED LIGHTING FIXTURE (REFER NOTE–5)	H.D.G.I.	1 SET	ELECTRICAL CONTRACTOR	ELECTRICAL CONTRACTOR

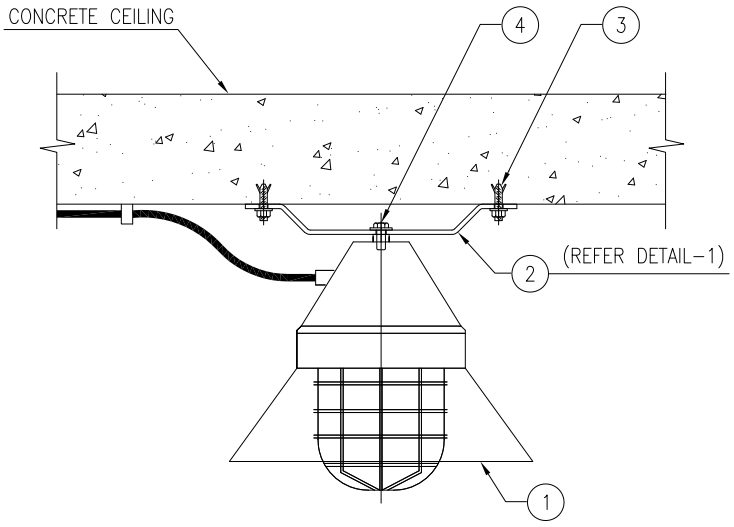

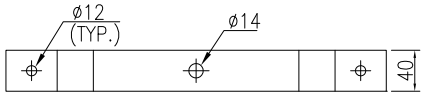

PLAN: DETAIL–1

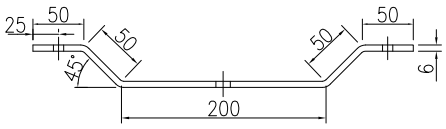

DETAIL–1
(REFER NOTE–2)

DRAWING NOT TO SCALE

NOTES:–

1) ALL DIMENSION ARE IN 'mm' UNLESS OTHERWISE SPECIFIED.
2) THE SUPPORT SHALL BE PREFABRICATED AND PAINTED BEFORE INSTALLATION.
3) THE DETAILS (SIZE AND DIMENSIONS) SHALL BE VERIFIED WITH ORDERED LIGHTING FIXTURE.
4) THE DIMENSIONS FOR ITEM–2 AND DETAILS OF HOLES (LOCATION & DIA) SHALL BE VERIFIED WITH THE ORDERED LIGHTING FIXTURE.
5) THE QUANTITY & SIZE OF THE HEXAGONAL HEAD BOLT (ITEM–4) REQUIRED FOR CONNECTION OF ITEM–2 TO THE LIGHTING FIXTURE SHALL BE VERIFIED WITH THE ORDERED LIGHTING FIXTURE.

Code	Contract No.	Document ID	Part	Rev.
		PIN–LEP–ELT–4003		00

Rev.	Date	Name (Drawn/Prepared)	Date	Name (Checked)	Date	Name (Approved)	Description	Acc. Code	Cat. Code	Acc. Code	Status
00	12/02/16	RDK ANK	12/02/16	RPM	12/02/16	RPM	ISSUED AS STANDARD				

BAR–Code

Store Location: Server/Share

Store Location: Folder

Store Name LWGC2

Pro. Unit	TON	Group	Type of Document	Sheet
				1 / 1

Con. Unit	Scale	Order No.
	NTS	

thyssenkrupp

	Date	Name
Drawn	12/02/16	RDK
Prepared	12/02/16	ANK
Checked	12/02/16	RPM
Approved	12/02/16	RPM

Description
INSTALLATION STANDARDS – LIGHTING WELL GLASS FIXTURE ON BRACKET, ON CONCRETE CEILING (LWGC2)

ISO A4

UH_BO_ISO_A4_P_E_tktIsIndia.dwg / AG03_UH_BO_ISO_A4_P.dwg / 14.12.2016

© thyssenkrupp Industrial Solutions (India) Private Limited 2017. All rights reserved

ITEM	DESCRIPTION	MATERIAL	QTY.	SUPPLY BY	INSTALLATION BY
1	WELL GLASS LIGHTING FIXTURE	–	1 NO.	CLIENT	ELECTRICAL CONTRACTOR
2	ISMC 75	M.S. PAINTED	AS REQUIRED	REFER NOTE–3 & 4	
3	BRACKET AS INDICATED IN DETAIL–2 MADE OF 40 x 6mm FLAT STRIP (REFER NOTE–6)	H.D.G.I.	1 NO.	ELECTRICAL CONTRACTOR	ELECTRICAL CONTRACTOR
4	HEXAGONAL HEAD BOLT M10 X 30mm LONG, THREADS UPTO HEAD, WITH NUTS & WASHERS SUITABLE FOR CONNECTIONS SHOWN IN THIS DRAWING	H.D.G.I.	2 SETS	ELECTRICAL CONTRACTOR	ELECTRICAL CONTRACTOR
5	HEXAGONAL HEAD BOLT M12 X 30mm LONG, THREADS UPTO HEAD, WITH NUTS & WASHERS SUITABLE FOR CONNECTIONS SHOWN IN THIS DRAWING	H.D.G.I.	2 SETS	ELECTRICAL CONTRACTOR	ELECTRICAL CONTRACTOR
6	M8 x 60mm LONG ANCHOR FASTENER, WITH SUITABLE NUT & WASHERS	GALVANISED STEEL/SS	2 SETS	ELECTRICAL CONTRACTOR	ELECTRICAL CONTRACTOR
7	HEXAGONAL HEAD BOLT M12 X 30mm LONG, THREADS UPTO HEAD, WITH NUTS & WASHERS SUITABLE FOR ORDERED LIGHTING FIXTURE (REFER NOTE–7)	H.D.G.I.	1 SET	ELECTRICAL CONTRACTOR	ELECTRICAL CONTRACTOR
8	ISMC 75	M.S. PAINTED	AS REQUIRED	REFER NOTE–4 & 5	

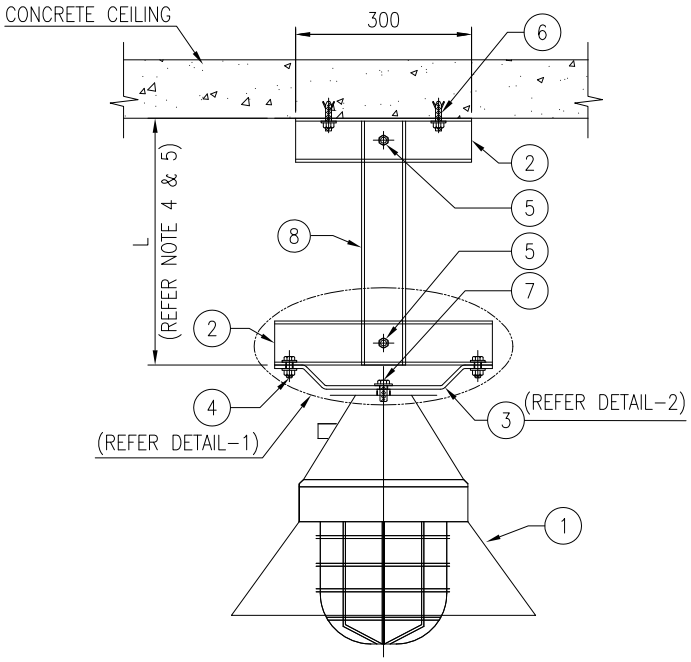

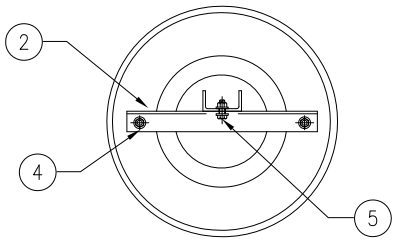

DETAIL–1
(PLAN VIEW)

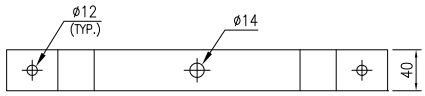

PLAN : DETAIL–2

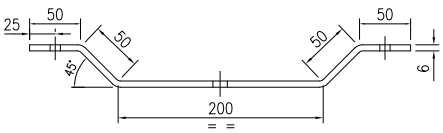

DETAIL–2
(REFER NOTE–3)

NOTES:–

1) ALL DIMENSION ARE IN 'mm' UNLESS OTHERWISE SPECIFIED.
2) THE SUPPORT SHALL BE PREFABRICATED AND PAINTED BEFORE INSTALLATION.
3) THE DETAILS (SIZE AND DIMENSIONS) SHALL BE VERIFIED WITH ORDERED LIGHTING FIXTURE.
4) SUPPLY & INSTALLATION OF STEEL IS NOT PART OF THIS INSTALLATION ARRANGEMENT. SAME IS COVERED ELSEWHERE.
5) LENGTH OF ITEM 8 SHALL BE DECIDED WITH RESPECT TO LAYOUT DRAWING OR WITH CONSULTATION OF SITE ENGINEER. LENGTH SHALL BE RESTRICTED TO MAXIMUM 3 METERS.
6) THE DIMENSIONS FOR ITEM–3 AND DETAILS OF HOLES (LOCATION & DIA) SHALL BE VERIFIED WITH THE ORDERED LIGHTING FIXTURE.
7) THE QUANTITY & SIZE OF THE HEXAGONAL HEAD BOLT (ITEM–7) REQUIRED FOR CONNECTION OF ITEM–3 TO THE LIGHTING FIXTURE SHALL BE VERIFIED WITH THE ORDERED LIGHTING FIXTURE.

DRAWING NOT TO SCALE

Code	Contract No.	Document ID	Part	Rev.
		PIN–LEP–ELT–4003		00

Rev.	Date	Name (Drawn/Prepared)		Date	Name (Checked)		Date	Name (Approved)	Description	Acc. Code	Cat. Code	Acc. Code	Status
00	12/02/16	RDK	ANK	12/02/16	RPM		12/02/16	RPM	ISSUED AS STANDARD				

BAR–Code

Store Location: Server/Share
Store Location: Folder
Store Name LWGC3

Pro. Unit	TON	Group	Type of Document	Sheet
				1 / 1

Con. Unit	Scale	Order No.
	NTS	

thyssenkrupp

	Date	Name
Drawn	12/02/16	RDK
Prepared	12/02/16	ANK
Checked	12/02/16	RPM
Approved	12/02/16	RPM

Description
INSTALLATION STANDARDS – LIGHTING WELL GLASS FIXTURE ON LONG BRACKET, ON CONCRETE CEILING (LWGC3)

ISO A4

UH_BO_ISO_A4_P_E_tktSIndia.dwg / AG03_UH_BO_ISO_A4_P.dwg / 14.12.2016

© thyssenkrupp Industrial Solutions (India) Private Limited 2017. All rights reserved

ITEM	DESCRIPTION	MATERIAL	QTY.	SUPPLY BY	INSTALLATION BY
1	WELL GLASS LIGHTING FIXTURE	–	1 NO.	ELECTRICAL CONTRACTOR	ELECTRICAL CONTRACTOR
2	PRE-FABRICATED NB80 PIPE (MEDIUM CLASS)	H.D.G.I.	3.75 MTRS.	ELECTRICAL CONTRACTOR	ELECTRICAL CONTRACTOR
3	80mm NB x 50mm NB REDUCER	H.D.G.I.	1 NO.	ELECTRICAL CONTRACTOR	ELECTRICAL CONTRACTOR
4	PREFABRICATED 50mm NB PIPE (MEDIUM CLASS)	H.D.G.I.	1.5 MTRS.	ELECTRICAL CONTRACTOR	ELECTRICAL CONTRACTOR
5	25mm ø 750mm LONG EARTHING ROD	H.D.G.I.	1 NO.	ELECTRICAL CONTRACTOR	ELECTRICAL CONTRACTOR
6	50mm ø PIPE SLEEVE 1800 LONG (INCLUSIVE OF EDGE PROTECTION FOR CABLES)	H.D.G.I.	4 MTRS.	ELECTRICAL CONTRACTOR	ELECTRICAL CONTRACTOR
7	EARTHING CONDUCTOR WITH LUG AND FIXING HARDWARE. SIZE OF CONDUTOR & MATERIAL SHALL BE AS PER THE 'EARTHING SCHEDULE' FOR THE PROJECT.	H.D.G.I.	AS REQUIRED	ELECTRICAL CONTRACTOR	ELECTRICAL CONTRACTOR
8	200 x 200 x 10mm THK. PLATE	M.S. PAINTED	1 NO.	REFER NOTE 4	
9	ADAPTOR OR REDUCER OR OTHER ACCESSORIES TO SUIT THE LIGHTING FIXTURE (REFER NOTE-3)	H.D.G.I.	1 NO.	ELECTRICAL CONTRACTOR	ELECTRICAL CONTRACTOR
10	CONCRETE MATERIAL AS INDICATED FOR BASE & SQUARE SHAPE FOUNDATION, BITUMEN & MISCELLANEOUS MATERIAL AS REQUIRED	–	1 LOT	ELECTRICAL CONTRACTOR	ELECTRICAL CONTRACTOR
11	EDGE PROTECTION FOR CABLE	RUBBER	2 NOS.	ELECTRICAL CONTRACTOR	ELECTRICAL CONTRACTOR

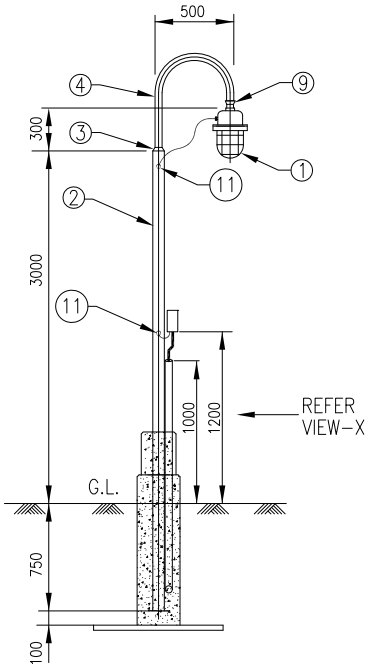

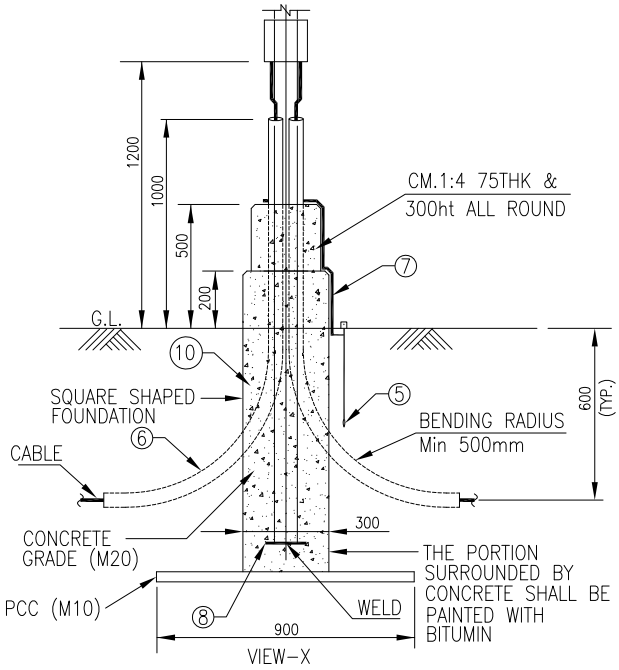

NOTES:

1) ALL DIMENSION ARE IN 'mm' UNLESS OTHERWISE SPECIFIED.
2) THE SUPPORT SHALL BE PREFABRICATED AND PAINTED BEFORE INSTALLATION.
3) THE DETAILS (SIZE AND DIMENSIONS) SHALL BE VERIFIED WITH ORDERED LIGHTING FIXTURE.
4) SUPPLY & INSTALLATION OF STEEL IS NOT PART OF THIS INSTALLATION ARRANGEMENT. SAME IS COVERED ELSEWHERE.
5) REQUIRED CIVIL WORK AS SHOWN IN DRAWING SHALL BE IN ELECTRICAL CONTRACTORS SCOPE

DRAWING NOT TO SCALE

Code	Contract No.	Document ID	Part	Rev.
		PIN-LEP-ELT-4003		00

Rev.	Date	Name (Drawn/Prepared)		Date	Name (Checked)	Date	Name (Approved)	Description	Acc. Code	Cat. Code	Acc. Code	Status
00	12/02/16	RDK	ANK	12/02/16	RPM	12/02/16	RPM	ISSUED AS STANDARD				

BAR-Code

Store Location: Server/Share

Store Location: Folder

Store Name LWGP1

Pro. Unit	TON	Group	Type of Document	Sheet
				1 / 1

Con. Unit	Scale	Order No.
	NTS	

thyssenkrupp

	Date	Name
Drawn	12/02/16	RDK
Prepared	12/02/16	ANK
Checked	12/02/16	RPM
Approved	12/02/16	RPM

Description
INSTALLATION STANDARDS – LIGHTING WELL GLASS FIXTURE ON POLE, ON CONCRETE FLOOR (LWGP1)

ISO A4

UH_B0_ISO_A4_P_E_IkdSIndia.dwg / AG03_UH_B0_ISO_A4_P.dwg / 14.12.2016

© thyssenkrupp Industrial Solutions (India) Private Limited 2017. All rights reserved

ITEM	DESCRIPTION	MATERIAL	QTY.	SUPPLY BY	INSTALLATION BY
1	WELL GLASS LIGHTING FIXTURE	–	1 NO.	CLIENT	ELECTRICAL CONTRACTOR
2	PREFABRICATED NB 80 (MEDIUM CLASS) PIPE (REFER NOTE–5)	H.D.G.I.	2.5 MTRS	ELECTRICAL CONTRACTOR	ELECTRICAL CONTRACTOR
3	80 NB x 50 NB REDUCER	H.D.G.I.	1 NO.	ELECTRICAL CONTRACTOR	ELECTRICAL CONTRACTOR
4	PREFABRICATED NB 50 (MEDIUM CLASS) PIPE (REFER NOTE–5)	H.D.G.I.	1.5 MTRS	ELECTRICAL CONTRACTOR	ELECTRICAL CONTRACTOR
5	U BOLT M10 SIZE THREADED AT THE END SUITABLE FOR NB 80 PIPE WITH NUT AND WASHERS	H.D.G.I.	4 SETS	ELECTRICAL CONTRACTOR	ELECTRICAL CONTRACTOR
6	ISMC 75	M.S. PAINTED	AS REQUIRED	REFER NOTE–4	
7	ADAPTOR OR REDUCER OR OTHER ACCESSORIES TO SUIT THE LIGHTING FIXTURE (REFER NOTE–3)	H.D.G.I.	1 NO.	ELECTRICAL CONTRACTOR	ELECTRICAL CONTRACTOR
8	EDGE PROTECTION FOR CABLE	RUBBER	1 NO.	ELECTRICAL CONTRACTOR	ELECTRICAL CONTRACTOR

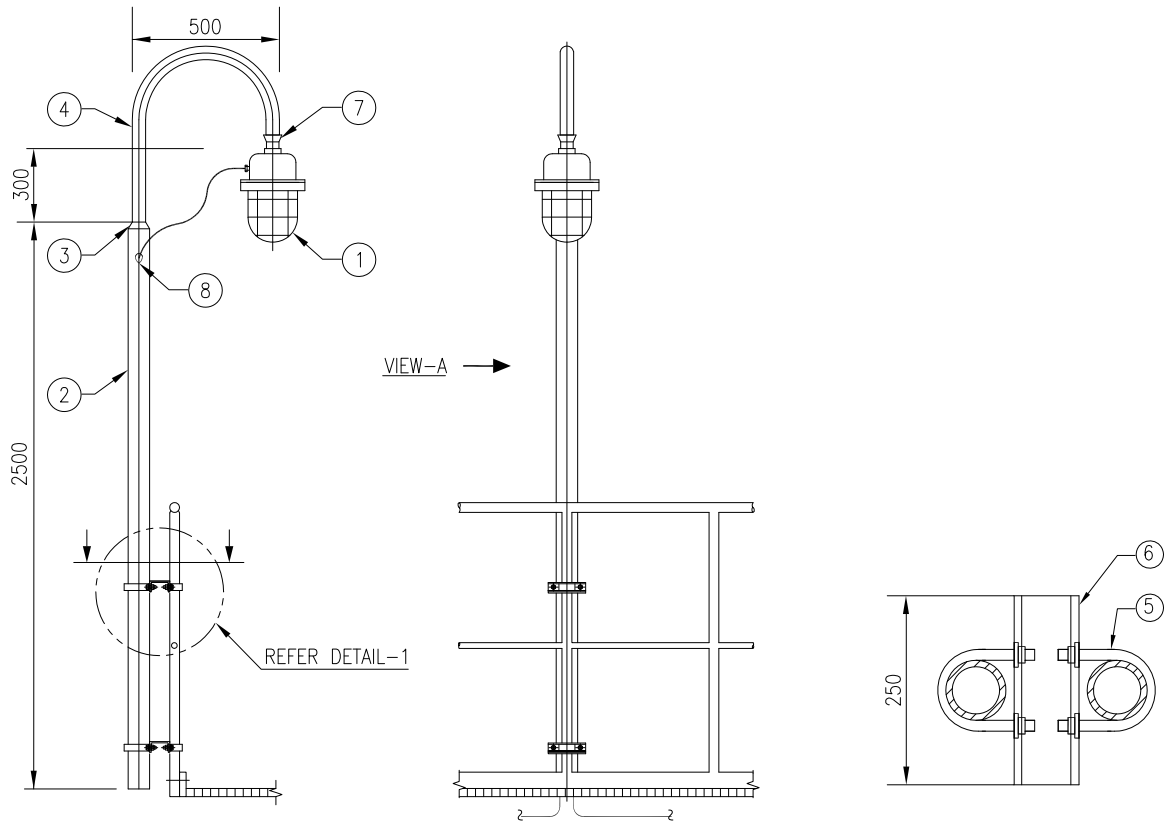

NOTES:–

1) ALL DIMENSION ARE IN 'mm' UNLESS OTHERWISE SPECIFIED.
2) THE SUPPORT SHALL BE PREFABRICATED AND PAINTED BEFORE INSTALLATION.
3) THE DETAILS (SIZE AND DIMENSIONS) SHALL BE VERIFIED WITH ORDERED LIGHTING FIXTURE.
4) SUPPLY & INSTALLATION OF STEEL IS NOT PART OF THIS INSTALLATION ARRANGEMENT. SAME IS COVERED ELSEWHERE.
5) THE DETAILS (SIZE AND DIMENSIONS) SHALL BE VERIFIED WITH NB 50 & NB 80 PIPE.

DRAWING NOT TO SCALE

Code	Contract No.	Document ID	Part	Rev.
		PIN–LEP–ELT–4003		00

Rev.	Date	Name (Drawn/Prepared)	Date	Name (Checked)	Date	Name (Approved)	Description	Acc. Code	Cat. Code	Acc. Code	Status
00	12/02/16	RDK	12/02/16	ANK	12/02/16	RPM	ISSUED AS STANDARD				

BAR–Code

Store Location: Server/Share

Store Location: Folder

Store Name LWGR1

Pro. Unit	TON	Group	Type of Document	Sheet
				1 / 1

Con. Unit	Scale	Order No.
	NTS	

thyssenkrupp

	Date	Name
Drawn	12/02/16	RDK
Prepared	12/02/16	ANK
Checked	12/02/16	RPM
Approved	12/02/16	RPM

Description

INSTALLATION STANDARDS – LIGHTING WELL GLASS FIXTURE ON POLE, ON STRUCTURAL STEEL RAILING (LWGR1)

ISO A4

UH_BO_ISO_A4_P_E_tkIIndia.dwg / AG03_UH_BO_ISO_A4_P.dwg / 14.12.2016

© thyssenkrupp Industrial Solutions (India) Private Limited 2017. All rights reserved

ITEM	DESCRIPTION	MATERIAL	QTY.	SUPPLY BY	INSTALLATION BY
1	WELL GLASS LIGHTING FIXTURE	–	1 NO.	CLIENT	ELECTRICAL CONTRACTOR
2	ISMC 75	M.S. PAINTED	AS REQUIRED	REFER NOTE–3 & 4	
3	BRACKET AS INDICATED IN DETAIL–1 MADE OF 40 x 6mm FLAT STRIP (REFER NOTE–5)	H.D.G.I.	1 NO.	ELECTRICAL CONTRACTOR	ELECTRICAL CONTRACTOR
4	HEXAGONAL HEAD BOLT M10 X 30mm LONG, THREADS UPTO HEAD, WITH NUTS & WASHERS SUITABLE FOR CONNECTIONS SHOWN IN THIS DRAWING	H.D.G.I.	2 SETS	ELECTRICAL CONTRACTOR	ELECTRICAL CONTRACTOR
5	HEXAGONAL HEAD BOLT M12 X 30mm LONG, THREADS UPTO HEAD, WITH NUTS & WASHERS SUITABLE FOR ORDERED LIGHTING FIXTURE (REFER NOTE–6)	H.D.G.I.	1 SET	ELECTRICAL CONTRACTOR	ELECTRICAL CONTRACTOR

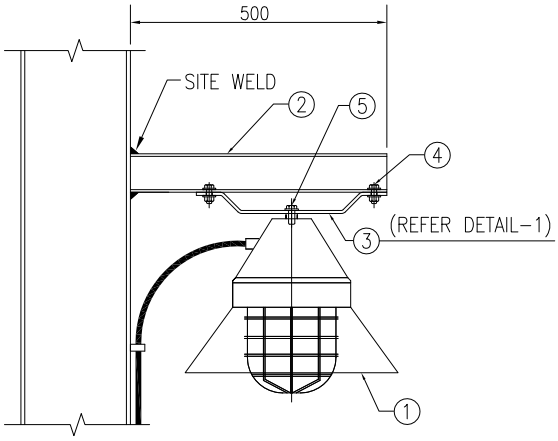

SIDE VIEW

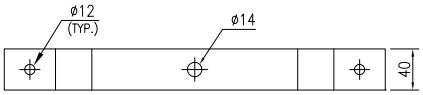

PLAN : DETAIL–1

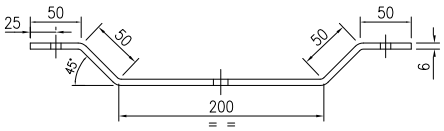

DETAIL–1

DRAWING NOT TO SCALE

NOTES:–

1) ALL DIMENSION ARE IN 'mm' UNLESS OTHERWISE SPECIFIED.
2) THE SUPPORT SHALL BE PREFABRICATED AND PAINTED BEFORE INSTALLATION. AREA AFFECTED DUE TO SITE WELDING SHALL BE CLEANED & PAINTED
3) THE DETAILS (SIZE AND DIMENSIONS) SHALL BE VERIFIED WITH ORDERED LIGHTING FIXTURE.
4) SUPPLY & INSTALLATION OF STEEL IS NOT PART OF THIS INSTALLATION ARRANGEMENT. SAME IS COVERED ELSEWHERE.
5) THE DIMENSIONS FOR ITEM–3 AND DETAILS OF HOLES (LOCATION & DIA) SHALL BE VERIFIED WITH THE ORDERED LIGHTING FIXTURE.
6) THE QUANTITY & SIZE OF THE HEXAGONAL HEAD BOLT (ITEM–5) REQUIRED FOR CONNECTION OF ITEM–3 TO THE LIGHTING FIXTURE SHALL BE VERIFIED WITH THE ORDERED LIGHTING FIXTURE.

Code	Contract No.	Document ID	Part	Rev.
		PIN–LEP–ELT–4003		00

Rev.	Date	Name (Drawn/Prepared)		Date	Name (Checked)		Date	Name (Approved)		Description	Acc. Code	Cat. Code	Acc. Code	Status
00	12/02/16	RDK	ANK	12/02/16	RPM		12/02/16	RPM		ISSUED AS STANDARD				

BAR–Code

Store Location: Server/Share

Store Location: Folder

Store Name LWGS1

Pro. Unit	TON	Group	Type of Document	Sheet
				1 / 1

Con. Unit	Scale	Order No.
	NTS	

thyssenkrupp

	Date	Name
Drawn	12/02/16	RDK
Prepared	12/02/16	ANK
Checked	12/02/16	RPM
Approved	12/02/16	RPM

Description
INSTALLATION STANDARDS – LIGHTING WELL GLASS FIXTURE ON BRACKET, ON STRUCTURAL COLUMN (LWGS1)

ISO A4

UH_BO_ISO_A4_P_E_tktSIndia.dwg / AG03_UH_BO_ISO_A4_P.dwg / 14.12.2016

© thyssenkrupp Industrial Solutions (India) Private Limited 2017. All rights reserved

ITEM	DESCRIPTION	MATERIAL	QTY.	SUPPLY BY	INSTALLATION BY
1	WELL GLASS LIGHTING FIXTURE	–	1 NO.	CLIENT	ELECTRICAL CONTRACTOR
2	ISMC 75	M.S. PAINTED	AS REQUIRED	REFER NOTE–3 & 4	
3	BRACKET AS INDICATED IN DETAIL–1 MADE OF 40 x 6mm FLAT STRIP (REFER NOTE–5)	H.D.G.I.	1 NO.	ELECTRICAL CONTRACTOR	ELECTRICAL CONTRACTOR
4	HEXAGONAL HEAD BOLT M10 X 30mm LONG, THREADS UPTO HEAD, WITH NUTS & WASHERS SUITABLE FOR CONNECTIONS SHOWN IN THIS DRAWING	H.D.G.I.	2 SETS	ELECTRICAL CONTRACTOR	ELECTRICAL CONTRACTOR
5	HEXAGONAL HEAD BOLT M12 X 30mm LONG, THREADS UPTO HEAD, WITH NUTS & WASHERS SUITABLE FOR ORDERED LIGHTING FIXTURE (REFER NOTE–6)	H.D.G.I.	1 SET	ELECTRICAL CONTRACTOR	ELECTRICAL CONTRACTOR

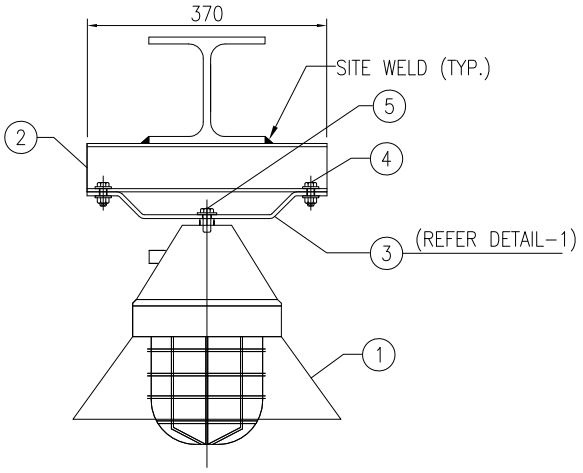

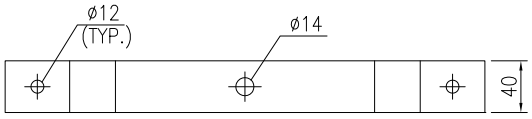

PLAN : DETAIL–1

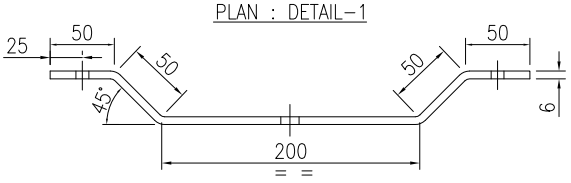

DETAIL–1

DRAWING NOT TO SCALE

NOTES:–

1) ALL DIMENSION ARE IN 'mm' UNLESS OTHERWISE SPECIFIED.
2) THE SUPPORT SHALL BE PREFABRICATED AND PAINTED BEFORE INSTALLATION. AREA AFFECTED DUE TO SITE WELDING SHALL BE CLEANED & PAINTED
3) THE DETAILS (SIZE AND DIMENSIONS) SHALL BE VERIFIED WITH ORDERED LIGHTING FIXTURE.
4) SUPPLY & INSTALLATION OF STEEL IS NOT PART OF THIS INSTALLATION ARRANGEMENT. SAME IS COVERED ELSEWHERE.
5) THE DIMENSIONS FOR ITEM–3 AND DETAILS OF HOLES (LOCATION & DIA) SHALL BE VERIFIED WITH THE ORDERED LIGHTING FIXTURE.
6) THE QUANTITY & SIZE OF THE HEXAGONAL HEAD BOLT (ITEM–5) REQUIRED FOR CONNECTION OF ITEM–3 TO THE LIGHTING FIXTURE SHALL BE VERIFIED WITH THE ORDERED LIGHTING FIXTURE.

Code	Contract No.	Document ID	Part	Rev.
		PIN–LEP–ELT–4003		00

Rev.	Date	Name (Drawn/Prepared)	Date	Name (Checked)	Date	Name (Approved)	Description	Acc. Code	Cat. Code	Acc. Code	Status
00	12/02/16	RDK ANK	12/02/16	RPM	12/02/16	RPM	ISSUED AS STANDARD				

BAR–Code

Store Location: Server/Share

Store Location: Folder

Store Name LWGS2

Pro. Unit	TON	Group	Type of Document	Sheet
				1 / 1

Con. Unit	Scale	Order No.
	NTS	

thyssenkrupp

	Date	Name
Drawn	12/02/16	RDK
Prepared	12/02/16	ANK
Checked	12/02/16	RPM
Approved	12/02/16	RPM

Description
INSTALLATION STANDARDS – LIGHTING WELL GLASS FIXTURE ON SHORT BRACKET, ON STRUCTURAL STEEL BEAM (LWGS2)

ISO A4

UH_BO_ISO_A4_P_E_tkIS\India.dwg / AG03_UH_BO_ISO_A4_P.dwg / 14.12.2016

© thyssenkrupp Industrial Solutions (India) Private Limited 2017 . All rights reserved

ITEM	DESCRIPTION	MATERIAL	QTY.	SUPPLY BY	INSTALLATION BY
1	WELL GLASS LIGHTING FIXTURE	–	1 NO.	CLIENT	ELECTRICAL CONTRACTOR
2	ISMC 75	M.S. PAINTED	AS REQUIRED	REFER NOTE–3 & 4	
3	BRACKET AS INDICATED IN DETAIL–2 MADE OF 40 x 6mm FLAT STRIP (REFER NOTE–6)	H.D.G.I.	1 NO.	ELECTRICAL CONTRACTOR	ELECTRICAL CONTRACTOR
4	HEXAGONAL HEAD BOLT M10 X 30mm LONG, THREADS UPTO HEAD, WITH NUTS & WASHERS SUITABLE FOR CONNECTIONS SHOWN IN THIS DRAWING	H.D.G.I.	2 SETS	ELECTRICAL CONTRACTOR	ELECTRICAL CONTRACTOR
5	HEXAGONAL HEAD BOLT M12 X 30mm LONG, THREADS UPTO HEAD, WITH NUTS & WASHERS SUITABLE FOR CONNECTIONS SHOWN IN THIS DRAWING	H.D.G.I.	2 SETS	ELECTRICAL CONTRACTOR	ELECTRICAL CONTRACTOR
6	HEXAGONAL HEAD BOLT M12 X 30mm LONG, THREADS UPTO HEAD, WITH NUTS & WASHERS SUITABLE FOR ORDERED LIGHTING FIXTURE (REFER NOTE–7)	H.D.G.I.	1 SET	ELECTRICAL CONTRACTOR	ELECTRICAL CONTRACTOR
7	ISMC 75	M.S. PAINTED	AS REQUIRED	REFER NOTE–4 & 5	

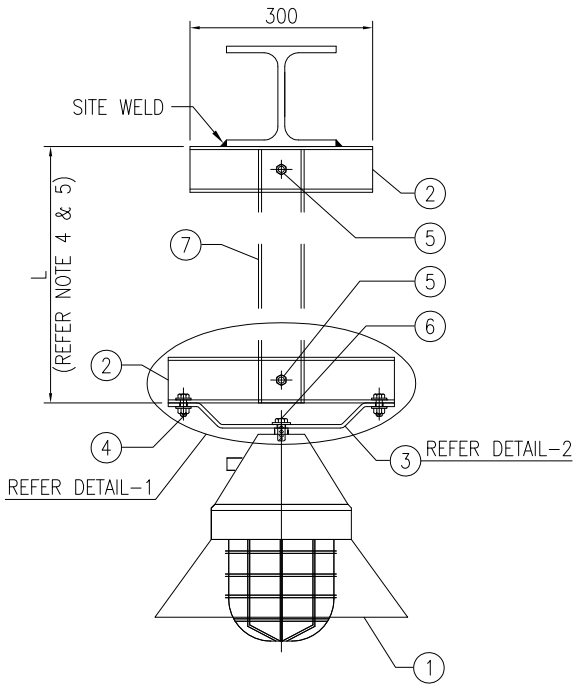

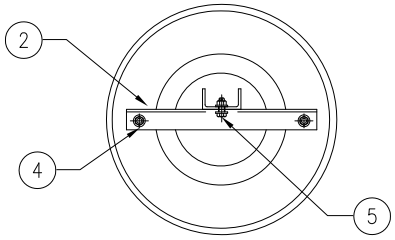

DETAIL–1
(PLAN VIEW)

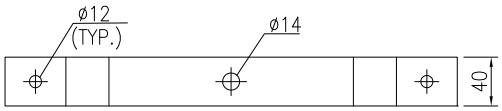

PLAN : DETAIL–2

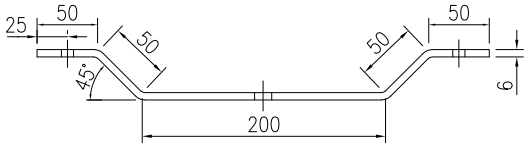

DETAIL–2

NOTES:–

DRAWING NOT TO SCALE

1) ALL DIMENSION ARE IN 'mm' UNLESS OTHERWISE SPECIFIED.
2) THE SUPPORT SHALL BE PREFABRICATED AND PAINTED BEFORE INSTALLATION. AREA AFFECTED DUE TO SITE WELDING SHALL BE CLEANED & PAINTED
3) THE DETAILS (SIZE AND DIMENSIONS) SHALL BE VERIFIED WITH ORDERED LIGHTING FIXTURE.
4) SUPPLY & INSTALLATION OF STEEL IS NOT PART OF THIS INSTALLATION ARRANGEMENT. SAME IS COVERED ELSEWHERE.
5) LENGTH OF ITEM 7 SHALL BE DECIDED WITH RESPECT TO LAYOUT DRAWING OR WITH CONSULTATION OF SITE ENGINEER. LENGTH SHALL BE RESTRICTED TO MAXIMUM 3 METERS.
6) THE DIMENSIONS FOR ITEM–3 AND DETAILS OF HOLES (LOCATION & DIA) SHALL BE VERIFIED WITH THE ORDERED LIGHTING FIXTURE.
7) THE QUANTITY & SIZE OF THE HEXAGONAL HEAD BOLT (ITEM–6) REQUIRED FOR CONNECTION OF ITEM–3 TO THE LIGHTING FIXTURE SHALL BE VERIFIED WITH THE ORDERED LIGHTING FIXTURE.

Code	Contract No.	Document ID	Part	Rev.
		PIN–LEP–ELT–4003		00

Rev.	Date	Name (Drawn/Prepared)	Date	Name (Checked)	Date	Name (Approved)	Description	Acc. Code	Cat. Code	Acc. Code	Status
00	12/02/16	RDK ANK	12/02/16	RPM	12/02/16	RPM	ISSUED AS STANDARD				

BAR–Code

Store Location: Server/Share

Store Location: Folder

Store Name LWGS3

Pro. Unit	TON	Group	Type of Document	Sheet
				1 / 1

Con. Unit	Scale	Order No.
	NTS	

thyssenkrupp

	Date	Name
Drawn	12/02/16	RDK
Prepared	12/02/16	ANK
Checked	12/02/16	RPM
Approved	12/02/16	RPM

Description
INSTALLATION STANDARDS – LIGHTING WELL GLASS FIXTURE ON LONG BRACKET, ON STRUCTURAL STEEL BEAM (LWGS3)

ISO A4

UH_BO_ISO_A4_P_E_tktSIndia.dwg / AG03_UH_BO_ISO_A4_P.dwg / 14.12.2016

© thyssenkrupp Industrial Solutions (India) Private Limited 2017. All rights reserved

UH_BO_ISO_A4_P_E_tktSIndia.dwg / AG03_UH_BO_ISO_A4_P.dwg / 14.12.2016

ITEM	DESCRIPTION	MATERIAL	QTY.	SUPPLY BY	INSTALLATION BY
1	SWITCH SOCKET	PROJ. SPEC.	1 NO.	CLIENT	ELECTRICAL CONTRACTOR
2	ANCHOR FASTENER M8 x 60mm LONG WITH SUITABLE NUT & WASHER	GALVANISED STEEL / SS	4 SETS	ELECTRICAL CONTRACTOR	ELECTRICAL CONTRACTOR
3	ISMC 75	M.S. PAINTED	AS REQUIRED	(REFER NOTE-3 & 4)	
4	HEXAGONAL HEAD BOLT M10 X 30mm LONG, THREADS UPTO HEAD, WITH SUITABLE NUTS & WASHERS (REFER NOTE-3)	H.D.G.I.	4 SETS	ELECTRICAL CONTRACTOR	ELECTRICAL CONTRACTOR
5	SADDLE WITH BASE STRIP & ACCESSORIES (M6 SCREWS, WASHERS WASHERS, PLASTIC ANCHORS ETC.)	H.D.G.I.	AS REQUIRED	ELECTRICAL CONTRACTOR	ELECTRICAL CONTRACTOR
6	CANOPY COVERED FROM 3 SIDES (REFER NOTE-5)	PROJ SPEC.	1 NO.	ELECTRICAL CONTRACTOR	ELECTRICAL CONTRACTOR
7	HEXAGONAL HEAD BOLT M6 X 25mm LONG, THREADS UPTO HEAD, WITH SUITABLE NUTS & WASHERS (FOR CANOPY FIXING)	H.D.G.I.	4 SETS	ELECTRICAL CONTRACTOR	ELECTRICAL CONTRACTOR

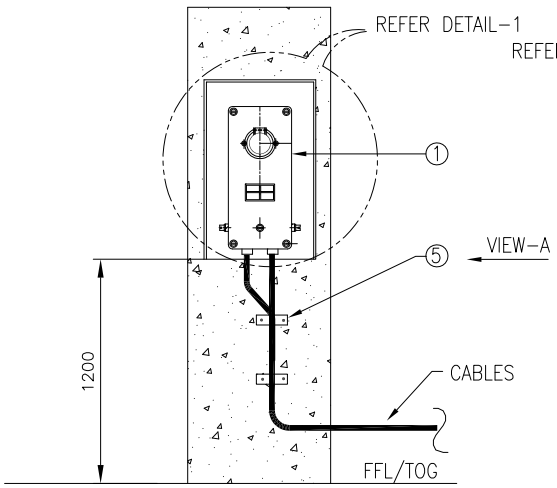

FRONT VIEW

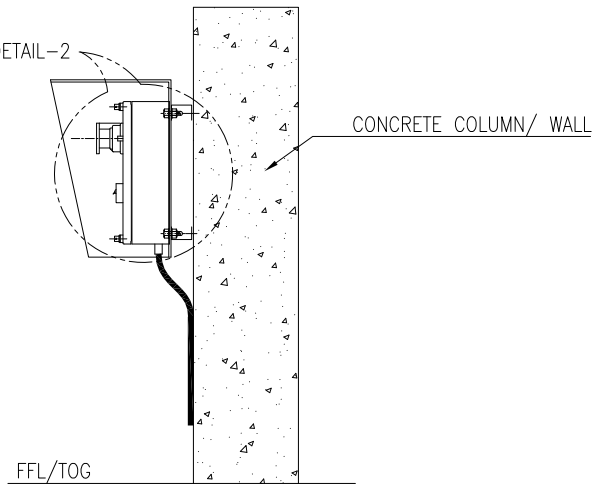

VIEW-A

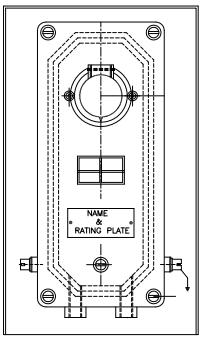

DETAIL-1

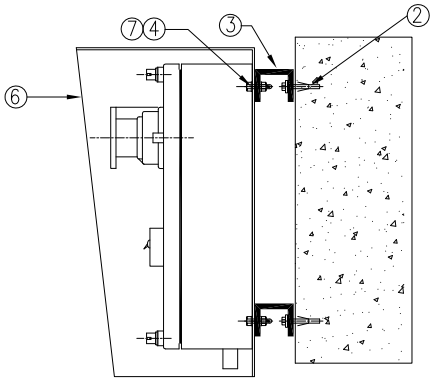

DETAIL-2

DRAWING NOT TO SCALE

NOTES

1) ALL DIMENSION ARE IN 'mm' UNLESS OTHERWISE STATED.
2) STEEL SECTIONS SHALL BE PREFABRICATED & PAINTED BEFORE INSTALLATION.
3) THESE DETAILS SHALL BE VERIFIED WITH ORDERED EQUIPMENT DRAWING.
4) SUPPLY & INSTALLATION OF STEEL IS NOT PART OF THIS INSTALLATION ARRANGEMENT. SAME IS COVERED ELSEWHERE.
5) CANOPY COVERED FROM 3 SIDES SHALL BE PROVIDED FOR LOCAL CONTROL STATION INSTALLED OUTDOOR.

Code	Contract No.	Document ID	Part	Rev.
		PIN-LEP-ELT-4003		00

Rev.	Date	Name (Drawn/Prepared)	Date	Name (Checked)	Date	Name (Approved)	Description	Acc. Code	Cat. Code	Acc. Code	Status
00	01.08.2017	KRP	01.08.2017	RPM	01.08.2017	RPM	ISSUED AS STANDARD				

BAR-Code

Store Location: Server/Share

Store Location: Folder

Store Name LSSC1

Pro. Unit	TON	Group	Type of Document	Sheet
				1 / 1

Con. Unit	Scale	Order No.
	NTS	

thyssenkrupp

	Date	Name
Drawn	01.08.2017	KRP
Prepared	01.08.2017	MLD
Checked	01.08.2017	RPM
Approved	01.08.2017	RPM

Description

INSTALLATION STANDARDS – LIGHTING SWITCH SOCKET ON CONCRETE COLUMN/BRICK WALL (LSSC1)

ISO A4

© thyssenkrupp Industrial Solutions (India) Private Limited 2017. All rights reserved

UH_BO_ISO_A4_P_E_tktSIndia.dwg / AG03_UH_BO_ISO_A4_P.dwg / 14.12.2016

ITEM	DESCRIPTION	MATERIAL	QTY.	SUPPLY BY	INSTALLATION BY
1	SWITCH SOCKET	PROJ. SPEC.	1 NO.	CLIENT	ELECTRICAL CONTRACTOR
2	ISMC 100	M.S. PAINTED	AS REQUIRED	REFER NOTE-4	
3	150 x 150 x10 THK PLATE	M.S. PAINTED	1 NO.	ELECTRICAL CONTRACTOR	ELECTRICAL CONTRACTOR
4	25 x 3mm THK. FLAT	M.S. PAINTED	1 METER	REFER NOTE-3 & 4	
5	HEXAGONAL HEAD BOLT M10 X 30mm LONG, THREADS UPTO HEAD, WITH SUITABLE NUTS & WASHERS (REFER NOTE-3)	H.D.G.I.	4 SETS	ELECTRICAL CONTRACTOR	ELECTRICAL CONTRACTOR
6	M8 x 60mm LONG ANCHOR FASTENER, WITH SUITABLE NUT & WASHERS	GALVANISED STEEL / SS	4 SETS	ELECTRICAL CONTRACTOR	ELECTRICAL CONTRACTOR
7	CABLE TIE	PLASTIC	AS REQUIRED	ELECTRICAL CONTRACTOR	ELECTRICAL CONTRACTOR
8	EDGE PROTECTION FOR CABLE	RUBBER	1 NO.	ELECTRICAL CONTRACTOR	ELECTRICAL CONTRACTOR
9	200x200x100 (LxWxH)mm PEDESTAL	CONCRETE (GRADE M20)	AS REQUIRED	ELECTRICAL CONTRACTOR	ELECTRICAL CONTRACTOR
10	CANOPY COVERED FROM 3 SIDES (REFER NOTE-5)	PROJ. SPEC.	1 NO.	ELECTRICAL CONTRACTOR	ELECTRICAL CONTRACTOR
11	HEXAGONAL HEAD BOLT M6 X 25mm LONG, THREADS UPTO HEAD, WITH SUITABLE NUTS & WASHERS (FOR CANOPY FIXING)	H.D.G.I.	4 SETS	ELECTRICAL CONTRACTOR	ELECTRICAL CONTRACTOR

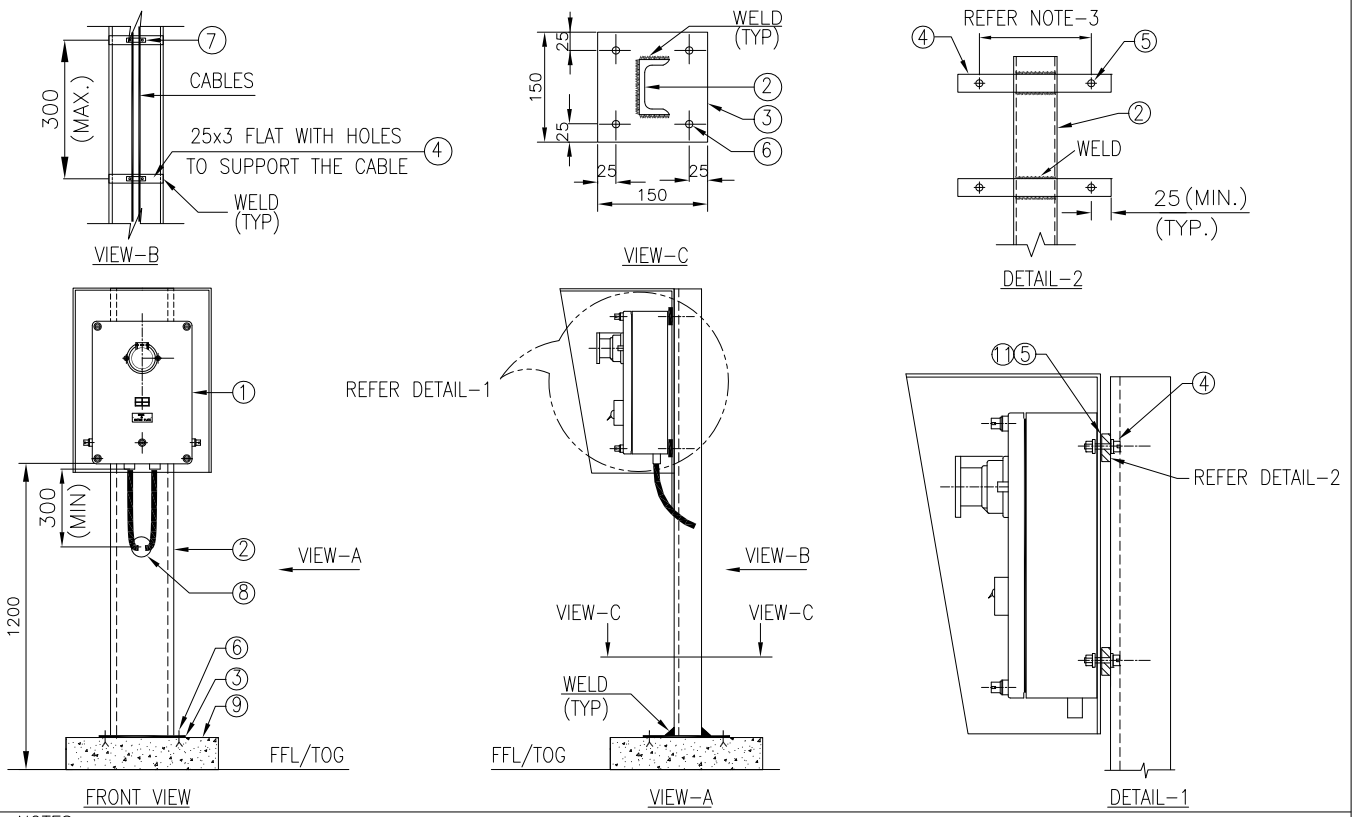

NOTES

DRAWING NOT TO SCALE

1) ALL DIMENSION ARE IN 'mm' UNLESS OTHERWISE STATED.
2) STEEL SECTIONS SHALL BE PREFABRICATED & PAINTED BEFORE INSTALLATION. AREA AFFECTED DUE TO SITE WELDING SHALL BE CLEANED AND PAINTED.
3) THESE DETAILS SHALL BE VERIFIED WITH ORDERED EQUIPMENT DRAWING.
4) SUPPLY & INSTALLATION OF STEEL IS NOT PART OF THISINSTALLATION ARRANGEMENT. SAME IS COVERED ELSEWHERE.
5) CANOPY COVERED FROM 3 SIDES SHALL BE PROVIDED FOR SWITCH SOCKET INSTALLED OUTDOOR.

Code	Contract No.	Document ID	Part	Rev.
		PIN-LEP-ELT-4003		00

Rev.	Date	Name (Drawn/Prepared)	Date	Name (Checked)	Date	Name (Approved)	Description	Acc. Code	Cat. Code	Acc. Code	Status
00	01.08.2017	KRP	01.08.2017	MLD	01.08.2017	RPM	01.08.2017	RPM	ISSUED AS STANDARD		

BAR-Code

Store Location: Server/Share

Store Location: Folder

Store Name LSSP1

Pro. Unit	TON	Group	Type of Document	Sheet
				1 / 1

Con. Unit	Scale	Order No.
	NTS	

thyssenkrupp

	Date	Name
Drawn	01.08.2017	KRP
Prepared	01.08.2017	MLD
Checked	01.08.2017	RPM
Approved	01.08.2017	RPM

Description
INSTALLATION STANDARDS – LIGHTING SWITCH SOCKET ON SELF-STANDING PEDESTAL (LSSP1)

ISO A4

© thyssenkrupp Industrial Solutions (India) Private Limited 2017. All rights reserved

ITEM	DESCRIPTION	MATERIAL	QTY.	SUPPLY BY	INSTALLATION BY
1	SWITCH SOCKET	PROJ. SPEC.	1 NO.	CLIENT	ELECTRICAL CONTRACTOR
2	ISMC 100	M.S. PAINTED	AS REQUIRED	REFER NOTE-4	
3	150 x 150 x10 THK PLATE	M.S. PAINTED	1 NO.	REFER NOTE-4	
4	25 x 3mm THK. FLAT	M.S. PAINTED	1 METER	REFER NOTE-3 & 4	
5	HEXAGONAL HEAD BOLT M10 X 30mm LONG, THREADS UPTO HEAD, WITH SUITABLE NUTS & WASHERS (REFER NOTE-3)	H.D.G.I.	4 SETS	ELECTRICAL CONTRACTOR	ELECTRICAL CONTRACTOR
6	CABLE TIE	PLASTIC	AS REQUIRED	ELECTRICAL CONTRACTOR	ELECTRICAL CONTRACTOR
7	EDGE PROTECTION FOR CABLE	RUBBER	1 NO.	ELECTRICAL CONTRACTOR	ELECTRICAL CONTRACTOR
8	CANOPY COVERED FROM 3 SIDES (REFER NOTE-5)	PROJ. SPEC.	1 NO.	ELECTRICAL CONTRACTOR	ELECTRICAL CONTRACTOR
9	HEXAGONAL HEAD BOLT M6 X 25mm LONG, THREADS UPTO HEAD, WITH SUITABLE NUTS & WASHERS (FOR CANOPY FIXING)	H.D.G.I.	4 SETS	ELECTRICAL CONTRACTOR	ELECTRICAL CONTRACTOR

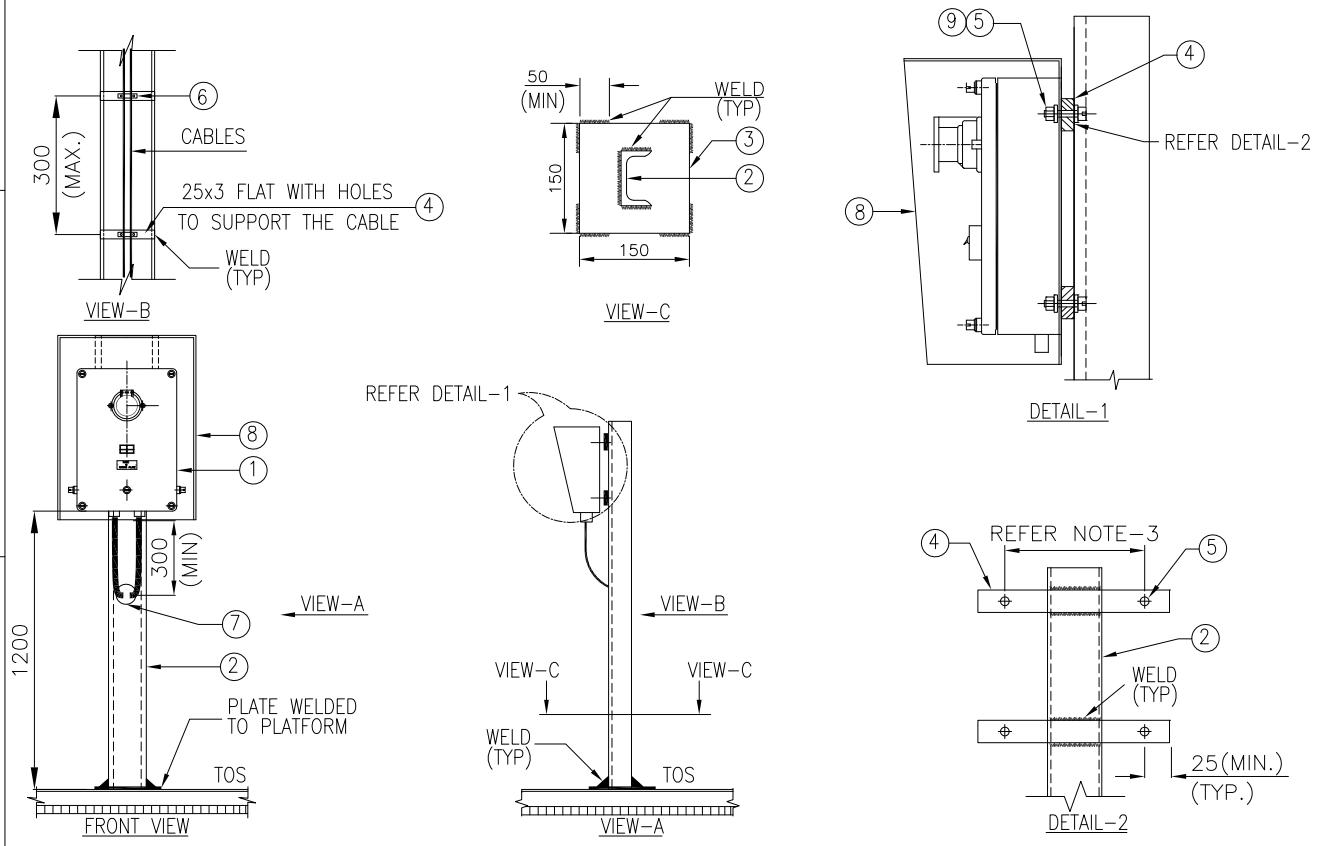

NOTES

1) ALL DIMENSION ARE IN 'mm' UNLESS OTHERWISE STATED.
2) STEEL SECTIONS SHALL BE PREFABRICATED & PAINTED BEFORE INSTALLATION. AREA AFFECTED DUE TO SITE WELDING SHALL BE CLEANED AND PAINTED.
3) THESE DETAILS SHALL BE VERIFIED WITH ORDERED EQUIPMENT DRAWING.
4) SUPPLY & INSTALLATION OF STEEL IS NOT PART OF THIS INSTALLATION ARRANGEMENT. SAME IS COVERED ELSEWHERE.
5) CANOPY COVERED FROM 3 SIDES SHALL BE PROVIDED FOR SWITCH SOCKET INSTALLED OUTDOOR.

DRAWING NOT TO SCALE

Code	Contract No.	Document ID	Part	Rev.
		PIN-LEP-ELT-4001		00

Rev.	Date	Name (Drawn/Prepared)	Date	Name (Checked)	Date	Name (Approved)	Description	Acc. Code	Cat. Code	Acc. Code	Status
00	01.08.2017	KRP	01.08.2017	MLD	01.08.2017	RPM	01.08.2017	RPM	ISSUED AS STANDARD		

BAR-Code

Store Location: Server/Share

Store Location: Folder

Store Name LSSP2

Pro. Unit	TON	Group	Type of Document	Sheet
				1 / 1

Con. Unit	Scale	Order No.
	NTS	

thyssenkrupp

	Date	Name
Drawn	01.08.2017	KRP
Prepared	01.08.2017	MLD
Checked	01.08.2017	RPM
Approved	01.08.2017	RPM

Description
INSTALLATION STANDARDS - POWER SWITCH SOCKET ON STEEL PLATFORM/GRATING (LSSP2)

ISO A4

UH_BO_ISO_A4_P_E_tktSIndia.dwg / AG03_UH_BO_ISO_A4_P.dwg / 14.12.2016

© thyssenkrupp Industrial Solutions (India) Private Limited 2017. All rights reserved

ITEM	DESCRIPTION	MATERIAL	QTY.	SUPPLY BY	INSTALLATION BY
1	SWITCH SOCKET	PROJ. SPEC.	1 NO.	CLIENT	ELECTRICAL CONTRACTOR
2	ISMC 75	M.S. PAINTED	AS REQUIRED	REFER NOTE-4	
3	25 x 3mm THK. FLAT	M.S. PAINTED	1.0 METER	REFER NOTE-3 & 4	
4	U BOLT M10 SIZE THREADED AT THE END SUITABLE FOR HANDRAIL PIPE WITH NUT & WASHERS.	H.D.G.I.	2 SETS	ELECTRICAL CONTRACTOR	ELECTRICAL CONTRACTOR
5	HEXAGONAL HEAD BOLT M10 X 30mm LONG, THREADS UPTO HEAD, WITH SUITABLE NUTS & WASHERS (REFER NOTE-3)	H.D.G.I.	2 SETS	ELECTRICAL CONTRACTOR	ELECTRICAL CONTRACTOR
6	CABLE TIE	PLASTIC	AS REQUIRED	ELECTRICAL CONTRACTOR	ELECTRICAL CONTRACTOR
7	EDGE PROTECTION FOR CABLE	RUBBER	1 NO.	ELECTRICAL CONTRACTOR	ELECTRICAL CONTRACTOR
8	CANOPY COVERED FROM 3 SIDES (REFER NOTE-5)	PROJ. SPEC.	1 NO.	ELECTRICAL CONTRACTOR	ELECTRICAL CONTRACTOR
9	HEXAGONAL HEAD BOLT M6 X 25mm LONG, THREADS UPTO HEAD, WITH SUITABLE NUTS & WASHERS (FOR CANOPY FIXING)	H.D.G.I.	4 SETS	ELECTRICAL CONTRACTOR	ELECTRICAL CONTRACTOR

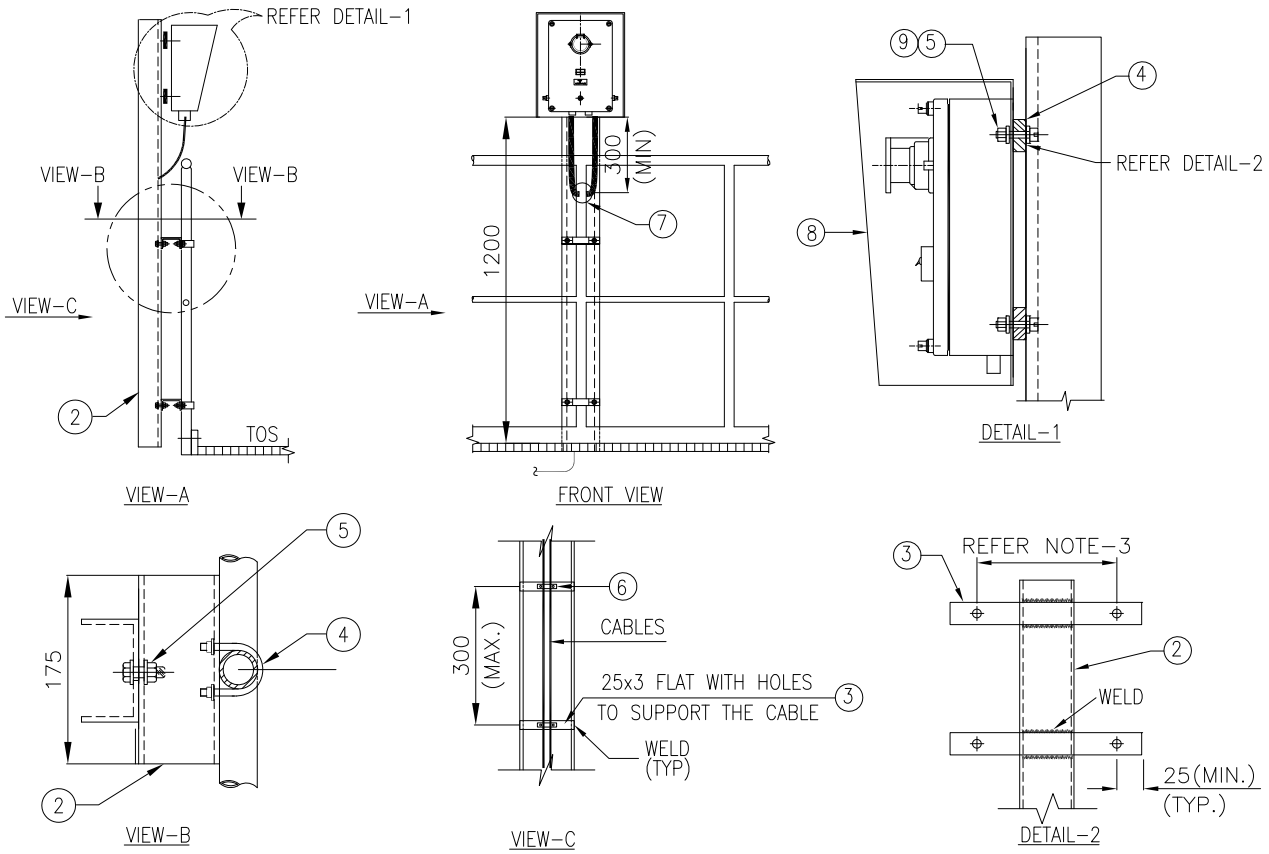

NOTES

1) ALL DIMENSION ARE IN 'mm' UNLESS OTHERWISE STATED.
2) STEEL SECTIONS SHALL BE PREFABRICATED & PAINTED BEFORE INSTALLATION. AREA AFFECTED DUE TO SITE WELDING SHALL BE CLEANED AND PAINTED.
3) THESE DETAILS SHALL BE VERIFIED WITH ORDERED EQUIPMENT DRAWING.
4) SUPPLY & INSTALLATION OF STEEL IS NOT PART OF THIS INSTALLATION ARRANGEMENT. SAME IS COVERED ELSEWHERE.
5) CANOPY COVERED FROM 3 SIDES SHALL BE PROVIDED FOR SWITCH SOCKET INSTALLED OUTDOOR.

DRAWING NOT TO SCALE

Code	Contract No.	Document ID	Part	Rev.
		PIN-LEP-ELT-4001		00

Rev.	Date	Name (Drawn/Prepared)	Date	Name (Checked)	Date	Name (Approved)	Description	Acc. Code	Cat. Code	Acc. Code	Status
00	01.08.2017	KRP	01.08.2017	MLD	01.08.2017	RPM	01.08.2017	RPM	ISSUED AS STANDARD		

BAR-Code

Store Location: Server/Share

Store Location: Folder

Store Name LSSR1

Pro. Unit	TON	Group	Type of Document	Sheet
				1 / 1

Con. Unit	Scale	Order No.
	NTS	

thyssenkrupp

	Date	Name
Drawn	01.08.2017	KRP
Prepared	01.08.2017	MLD
Checked	01.08.2017	RPM
Approved	01.08.2017	RPM

Description
INSTALLATION STANDARDS – POWER SWITCH SOCKET ON RAILING (LSSR1)

ISO A4

UH_BO_ISO_A4_P_E_tktSIndia.dwg / AG03_UH_BO_ISO_A4_P.dwg / 14.12.2016

© thyssenkrupp Industrial Solutions (India) Private Limited 2017. All rights reserved

ITEM	DESCRIPTION	MATERIAL	QTY.	SUPPLY BY	INSTALLATION BY
1	SWITCH SOCKET	PROJ. SPEC.	1 NO.	CLIENT	ELECTRICAL CONTRACTOR
2	ISMC 75	M.S. PAINTED	AS REQUIRED	REFER NOTE-3 & 4	
3	HEXAGONAL HEAD BOLT M10 X 30mm LONG, THREADS UPTO HEAD, WITH SUITABLE NUTS & WASHERS (REFER NOTE-3)	HDGI	4 SETS	ELECTRICAL CONTRACTOR	ELECTRICAL CONTRACTOR
4	CANOPY COVERED FROM 3 SIDES (REFER NOTE-5)	PROJ. SPEC.	1 NO.	ELECTRICAL CONTRACTOR	ELECTRICAL CONTRACTOR
5	HEXAGONAL HEAD BOLT M6 X 25mm LONG, THREADS UPTO HEAD, WITH SUITABLE NUTS & WASHERS (FOR CANOPY FIXING)	HDGI	4 SETS	ELECTRICAL CONTRACTOR	ELECTRICAL CONTRACTOR

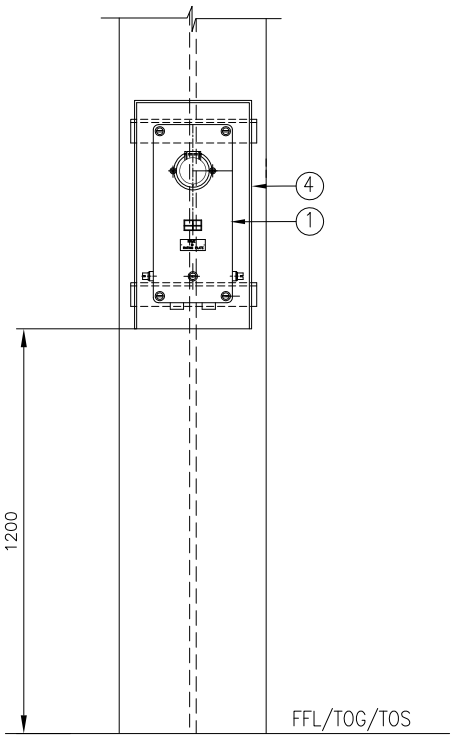

FRONT VIEW

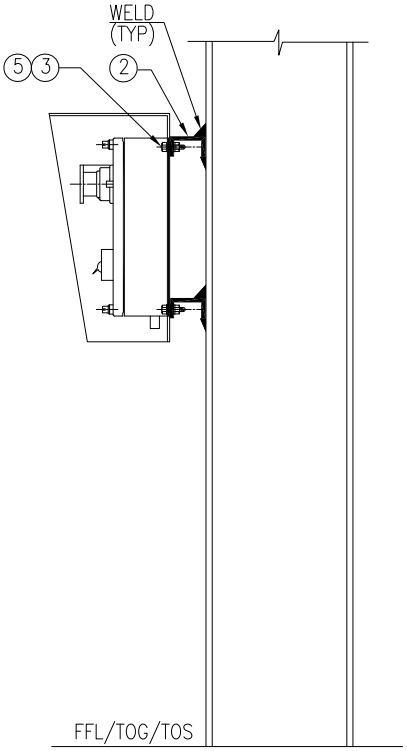

VIEW-A

DRAWING NOT TO SCALE

NOTES

1) ALL DIMENSION ARE IN 'mm' UNLESS OTHERWISE STATED.
2) STEEL SECTIONS SHALL BE PREFABRICATED & PAINTED BEFORE INSTALLATION. AREA AFFECTED DUE TO SITE WELDING SHALL BE CLEANED AND PAINTED.
3) THESE DETAILS SHALL BE VERIFIED WITH ORDERED EQUIPMENT DRAWING.
4) SUPPLY & INSTALLATION OF STEEL IS NOT PART OF THIS INSTALLATION ARRANGEMENT. SAME IS COVERED ELSEWHERE.
5) CANOPY COVERED FROM 3 SIDES SHALL BE PROVIDED FOR SWITCH SOCKET INSTALLED OUTDOOR.

Code	Contract No.	Document ID	Part	Rev.
		PIN-LEP-ELT-4003		00

Rev.	Date	Name (Drawn/Prepared)	Date	Name (Checked)	Date	Name (Approved)	Description	Acc. Code	Cat. Code	Acc. Code	Status
00	01.08.2017	KRP / MLD	01.08.2017	RPM	01.08.2017	RPM	ISSUED AS STANDARD				

BAR-Code

Store Location: Server/Share

Store Location: Folder

Store Name LSSS1

Pro. Unit	TON	Group	Type of Document	Sheet
				1 / 1

Con. Unit	Scale	Order No.
	NTS	

thyssenkrupp

	Date	Name
Drawn	01.08.2017	KRP
Prepared	01.08.2017	MLD
Checked	01.08.2017	RPM
Approved	01.08.2017	RPM

Description
INSTALLATION STANDARDS - LIGHTING SWITCH SOCKET ON STEEL STRUCTURE (LSSS1)

ISO A4

UH_BO_ISO_A4_P_E_tktSIndia.dwg / AG03_UH_BO_ISO_A4_P.dwg / 14.12.2016

© thyssenkrupp Industrial Solutions (India) Private Limited 2017. All rights reserved

ITEM	DESCRIPTION	MATERIAL	QTY.	SUPPLY BY	INSTALLATION BY
1	JUNCTION BOX	–	1 NO.	CLIENT	ELECTRICAL CONTRACTOR
2	ACCESSORIES TO FIX JUNCTION BOX SUCH AS PLASTIC ANCHORS, M6 HDGI SCREWS ETC. (REFER NOTE–2)	–	4 SETS	ELECTRICAL CONTRACTOR	ELECTRICAL CONTRACTOR

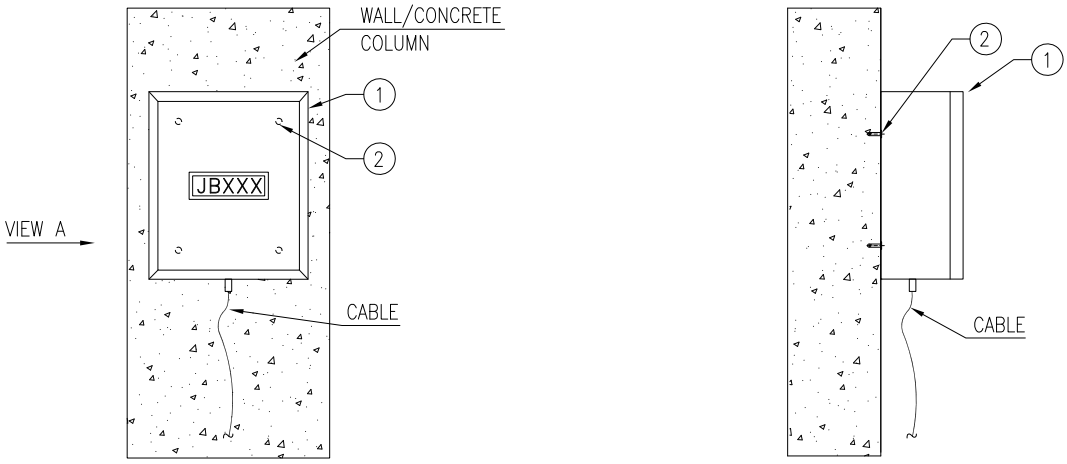

FRONT VIEW

VIEW–A

JUNCTION BOX ON WALL/CONCRTE COLUMN
(VARIATION–1)

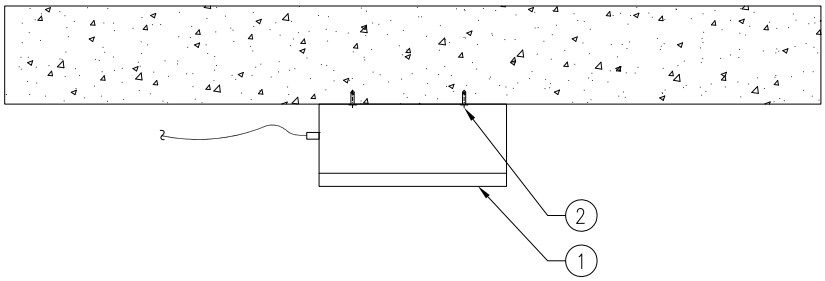

JUNCTION BOX ON CONCRETE CEILING
(VARIATION–2)

DRAWING NOT TO SCALE

NOTES
1) ALL DIMENSION ARE IN 'mm' UNLESS OTHERWISE SPECIFIED.
2) THESE DETAILS SHALL BE VERIFIED WITH ORDERED EQUIPMENT DRAWING.

Code	Contract No.	Document ID	Part	Rev.
		PIN–LEP–ELT–4003		00

Rev.	Date	Name (Drawn/Prepared)		Date	Name (Checked)		Date	Name (Approved)	Description	Acc. Code	Cat. Code	Acc. Code	Status
00	15.09.2017	KRP	MLD	15.09.2017	RPM		15.09.2017	RPM	ISSUED AS STANDARD				

BAR–Code

Store Location: Server/Share

Store Location: Folder

Store Name LJBC1

Pro. Unit	TON	Group	Type of Document	Sheet
				1 / 1

Con. Unit	Scale	Order No.
	NTS	

thyssenkrupp

	Date	Name
Drawn	15.09.2017	KRP
Prepared	15.09.2017	MLD
Checked	15.09.2017	RPM
Approved	15.09.2017	RPM

Description
INSTALLATION STANDARDS – LIGHTING
JUNCTION BOX ON WALL/CONCRETE
COLUMN : TYPE 1
(LJBC1)

ISO A4

UH_BO_ISO_A4_P_E_tktSIndia.dwg / AG03_UH_BO_ISO_A4_P.dwg / 14.12.2016

© thyssenkrupp Industrial Solutions (India) Private Limited 2017. All rights reserved

ITEM	DESCRIPTION	MATERIAL	QTY.	SUPPLY BY	INSTALLATION BY
1	JUNCTION BOX	–	1 NO.	CLIENT	ELECTRICAL CONTRACTOR
2	HEXAGONAL HEAD BOLT M6 X 25mm LONG, THREADS UPTO HEAD, WITH SUITABLE NUTS & WASHERS (REFER NOTE–3)	H.D.G.I.	2 SETS	ELECTRICAL CONTRACTOR	ELECTRICAL CONTRACTOR
3	ISMC 75	M.S. PAINTED	AS REQUIRED	(REFER NOTE–3 & 4)	
4	ANCHOR FASTENER M6 x 50mm LONG WITH SUITABLE NUT & WASHER	GALVANISED STEEL / SS	1 SET	ELECTRICAL CONTRACTOR	ELECTRICAL CONTRACTOR

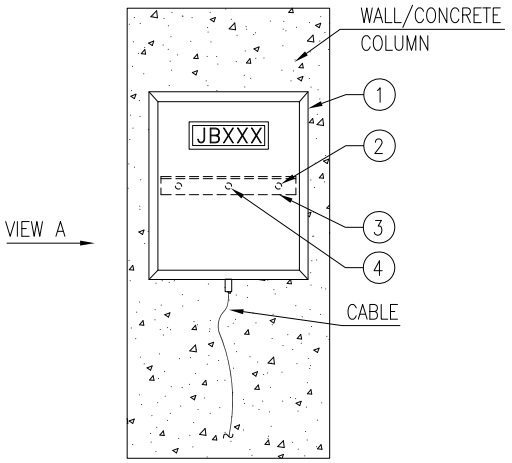

FRONT VIEW

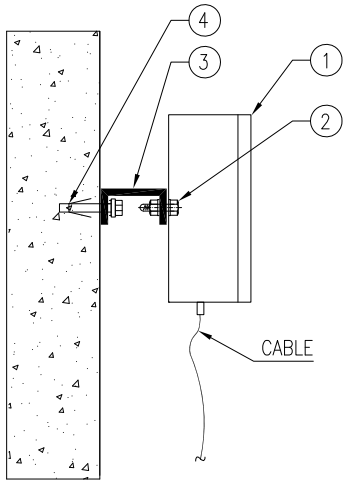

VIEW–A

DRAWING NOT TO SCALE

NOTES

1) ALL DIMENSION ARE IN 'mm' UNLESS OTHERWISE STATED.
2) STEEL SECTIONS SHALL BE PREFABRICATED & PAINTED BEFORE INSTALLATION.
3) THESE DETAILS SHALL BE VERIFIED WITH ORDERED EQUIPMENT DRAWING.
4) SUPPLY & INSTALLATION OF STEEL IS NOT PART OF THIS INSTALLATION ARRANGEMENT. SAME IS COVERED ELSEWHERE.

Code	Contract No.	Document ID	Part	Rev.
		PIN–LEP–ELT–4003		00

Rev.	Date	Name (Drawn/Prepared)		Date	Name (Checked)		Date	Name (Approved)	Description	Acc. Code	Cat. Code	Acc. Code	Status
00	15.09.2017	KRP	MLD	15.09.2017	RPM		15.09.2017	RPM	ISSUED AS STANDARD				

BAR–Code

Store Location: Server/Share

Store Location: Folder

Store Name LJBC2

Pro. Unit	TON	Group	Type of Document	Sheet
				1 / 1

Con. Unit	Scale	Order No.
	NTS	

thyssenkrupp

	Date	Name
Drawn	15.09.2017	KRP
Prepared	15.09.2017	MLD
Checked	15.09.2017	RPM
Approved	15.09.2017	RPM

Description
INSTALLATION STANDARDS – LIGHTING JUNCTION BOX ON WALL/CONCRETE COLUMN : TYPE 2 (LJBC2)

ISO A4

UH_BO_ISO_A4_P_E_tktSIndia.dwg / AG03_UH_BO_ISO_A4_P.dwg / 14.12.2016

© thyssenkrupp Industrial Solutions (India) Private Limited 2017. All rights reserved

ITEM	DESCRIPTION	MATERIAL	QTY.	SUPPLY BY	INSTALLATION BY
1	JUNCTION BOX	PROJ. SPEC.	1 NO.	CLIENT	ELECTRICAL CONTRACTOR
2	ISMC 75	M.S. PAINTED	AS REQUIRED	(REFER NOTE-3 & 4)	
3	U BOLT M10 SIZE THREADED AT THE END SUITABLE FOR HANDRAIL PIPE WITH NUT & WASHERS.	H.D.G.I.	1 SET	ELECTRICAL CONTRACTOR	ELECTRICAL CONTRACTOR

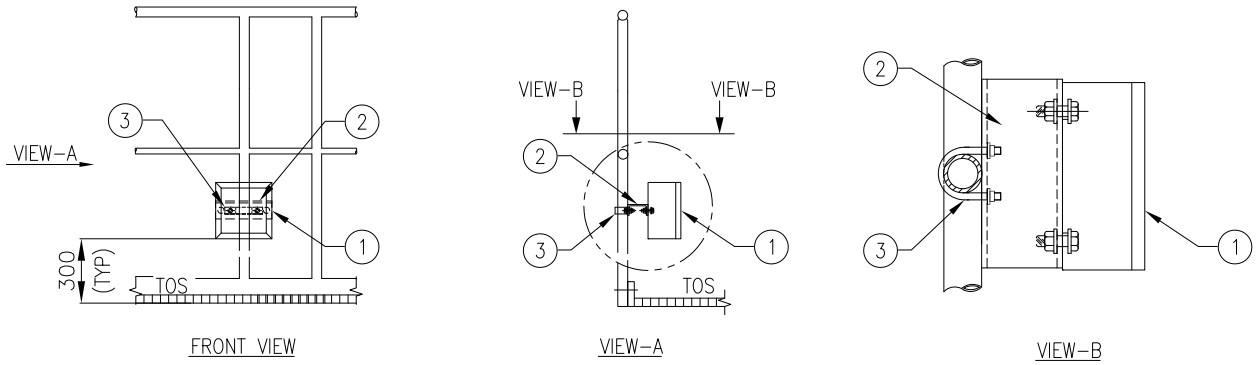

FRONT VIEW

VIEW-A

VIEW-B

DRAWING NOT TO SCALE

NOTES

1) ALL DIMENSION ARE IN 'mm' UNLESS OTHERWISE STATED.
2) STEEL SECTIONS SHALL BE PREFABRICATED & PAINTED BEFORE INSTALLATION.
3) THESE DETAILS SHALL BE VERIFIED WITH ORDERED EQUIPMENT DRAWING.
4) SUPPLY & INSTALLATION OF STEEL IS NOT PART OF THIS INSTALLATION ARRANGEMENT. SAME IS COVERED ELSEWHERE.

Code	Contract No.	Document ID	Part	Rev.
		PIN-LEP-ELT-4003		00

Rev.	Date	Name (Drawn/Prepared)		Date	Name (Checked)		Date	Name (Approved)		Description	Acc. Code	Cat. Code	Acc. Code	Status
00	15.09.2017	KRP	MLD	15.09.2017	RPM		15.09.2017	RPM		ISSUED AS STANDARD				

BAR-Code

Store Location: Server/Share

Store Location: Folder

Store Name LJBR1

Pro. Unit	TON	Group	Type of Document	Sheet
				1 / 1

Con. Unit	Scale	Order No.
	NTS	

thyssenkrupp

	Date	Name
Drawn	15.09.2017	KRP
Prepared	15.09.2017	MLD
Checked	15.09.2017	RPM
Approved	15.09.2017	RPM

Description
INSTALLATION STANDARDS - LIGHTING JUNCTION BOX ON RAILING (LJBR1)

ISO A4

UH_BO_ISO_A4_P_E_tktSIndia.dwg / AG03_UH_BO_ISO_A4_P.dwg / 14.12.2016

© thyssenkrupp Industrial Solutions (India) Private Limited 2017. All rights reserved

UH_BO_ISO_A4_P_E_tktSIndia.dwg / AG03_UH_BO_ISO_A4_P.dwg / 14.12.2016

ITEM	DESCRIPTION	MATERIAL	QTY.	SUPPLY BY	INSTALLATION BY
1	JUNCTION BOX	PROJ. SPEC.	1 NO.	CLIENT	ELECTRICAL CONTRACTOR
2	ISMC 75	M.S. PAINTED	AS REQUIRED	(REFER NOTE-3 & 4)	
3	HEXAGONAL HEAD BOLT M6 X 25mm LONG, THREADS UPTO HEAD, WITH SUITABLE NUTS & WASHERS (REFER NOTE-3)	H.D.G.I.	2 SETS	ELECTRICAL CONTRACTOR	ELECTRICAL CONTRACTOR

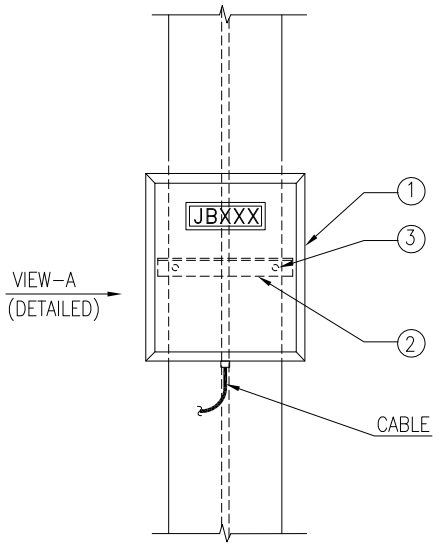

VARIATION 1

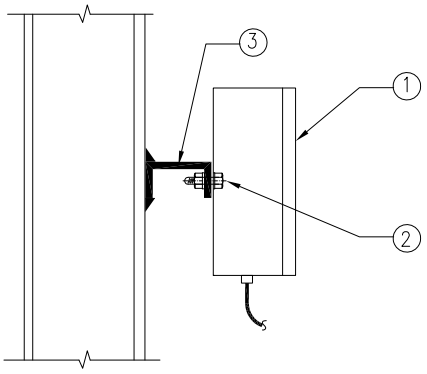

VIEW-A (DETAILED)

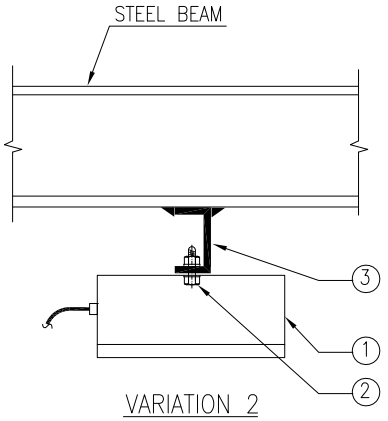

VARIATION 2

DRAWING NOT TO SCALE

NOTES

1) ALL DIMENSION ARE IN 'mm' UNLESS OTHERWISE STATED.
2) STEEL SECTIONS SHALL BE PREFABRICATED & PAINTED BEFORE INSTALLATION. AREA AFFECTED DUE TO SITE WELDING SHALL BE CLEANED AND PAINTED.
3) THESE DETAILS SHALL BE VERIFIED WITH ORDERED EQUIPMENT DRAWING.
4) SUPPLY & INSTALLATION OF STEEL IS NOT PART OF THIS INSTALLATION ARRANGEMENT. SAME IS COVERED ELSEWHERE.

Code	Contract No.	Document ID	Part	Rev.
		PIN-LEP-ELT-4003		00

Rev.	Date	Name (Drawn/Prepared)	Date	Name (Checked)	Date	Name (Approved)	Description	Acc. Code	Cat. Code	Acc. Code	Status
00	15.09.2017	KRP	15.09.2017	RPM	15.09.2017	RPM	ISSUED AS STANDARD				

BAR-Code

Store Location: Server/Share

Store Location: Folder

Store Name LJBS1

Pro. Unit	TON	Group	Type of Document	Sheet
				1 / 1

Con. Unit	Scale	Order No.
	NTS	

thyssenkrupp

	Date	Name
Drawn	15.09.2017	KRP
Prepared	15.09.2017	MLD
Checked	15.09.2017	RPM
Approved	15.09.2017	RPM

Description
INSTALLATION STANDARDS – LIGHTING JUNCTION BOX ON STEEL STRUCTURE (LJBS1)

ISO A4

© thyssenkrupp Industrial Solutions (India) Private Limited 2017. All rights reserved

INSTALLATION DETAIL-LIGHTNING PROTECTION

LIST OF INSTALLATION STANDARDS

Sr. No.	Description	Typical No.	No. of Sheets	Rev
1	Lightning conductor, round. on flat surface with concrete weight	LPC1	1	0
2	Lightning conductor, round, on flat surface with adhesion	LPC2	1	0
3	Lightning conductor, round, on flat surface with conductor holder	LPC3	1	0
4	Lightning conductor, round, on flat surface with saddle/clamp	LPC4	1	0
5	Lightning conductor, round, on corrugated roof	LPC5	1	0
6	Lightning conductor, strip, on flat surface with conductor holder	LPC6	1	0
7	Lightning conductor, strip, on corrugated roof	LPC7	1	0
8	Lightning down conductor, round, on wall with saddle/clamp	LPD1	1	0
9	Lightning down conductor, round, on wall with conductor holder	LPD2	1	0
10	Lightning down conductor, strip, on wall with conductor holder	LPD3	1	0
11	Lightning down conductor on steel column with attachment clamp	LPD4	1	0
12	Test joint	LPJ1	1	0
13	Self-standing air termination rod	LPR1	1	0
14	Air termination rod with tripod arrangement	LPR2	1	0
15	Air termination rod on steel structure	LPR3	1	0
16	Air termination rod on concrete surface	LPR4	1	0
17	Air termination rod on roof truss	LPR5	1	0
18	Cross Connector/T-connector	LPT1	1	0
19	Expansion piece with connector	LPT2	1	0
20	Parallel connector	LPT3	1	0
21	Lightning conductor schedule	LSCH	1	0

1. General:

a. The documents/drawings as indicated below shall be prepared by the LSTK Contractor as a part of detail Engineering.

b. These notes shall be read and construed in conjunction with Lightning Protection layout drawings and Installation Standards – Installation Standards - Lightning Protection.

2. Lightning protection:

a. Earthing of buildings and structures for the purpose of lightning protection shall be designed in accordance with national regulations. An earthing system designed and installed for purposes other than lightning protection (e.g. protective earthing, but excluding instrument earthing systems) may be used to serve the lightning protection system.

b. Lightning protection down conductors shall be cleated on outer side of the building wall at every 500 mm interval.

c. Connection between each down conductor and earthing conductor/ lightning earth pit shall be made via test link located approximately 1000 mm above ground level.

d. Lightning conductors shall not pass through GI conduits. The same shall not have sharp bends and should be as straight as possible.

e. All metallic structures within a vicinity of 2000 mm in air shall be bonded to the conductors of lightning protection system.

f. Separate earth pits to be considered for lightning arrestors.

ITEM	DESCRIPTION	MATERIAL	QTY.	SUPPLY BY	INSTALLATION BY
1	LIGHTNING CONDUCTOR, ROUND, ø8mm (AL) / ø10mm (HDGI)	ALUMINIUM/ HDGI	AS REQUIRED	ELECTRICAL CONTRACTOR	ELECTRICAL CONTRACTOR
2	CONDUCTOR HOLDER FOR FLAT SURFACE FILLED WITH CONCRETE, WITH CLOSED SHAPE BASE & WITH DOUBLE CABLE CLAMP SUITABLE FOR LIGHTNING CONDUCTOR (ITEM NO. 1)	POLYETHYLENE FILLED WITH CONCRETE	AS REQUIRED	ELECTRICAL CONTRACTOR	ELECTRICAL CONTRACTOR

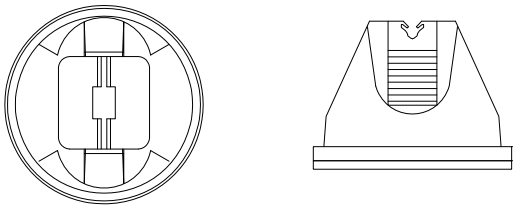

DETAIL–A

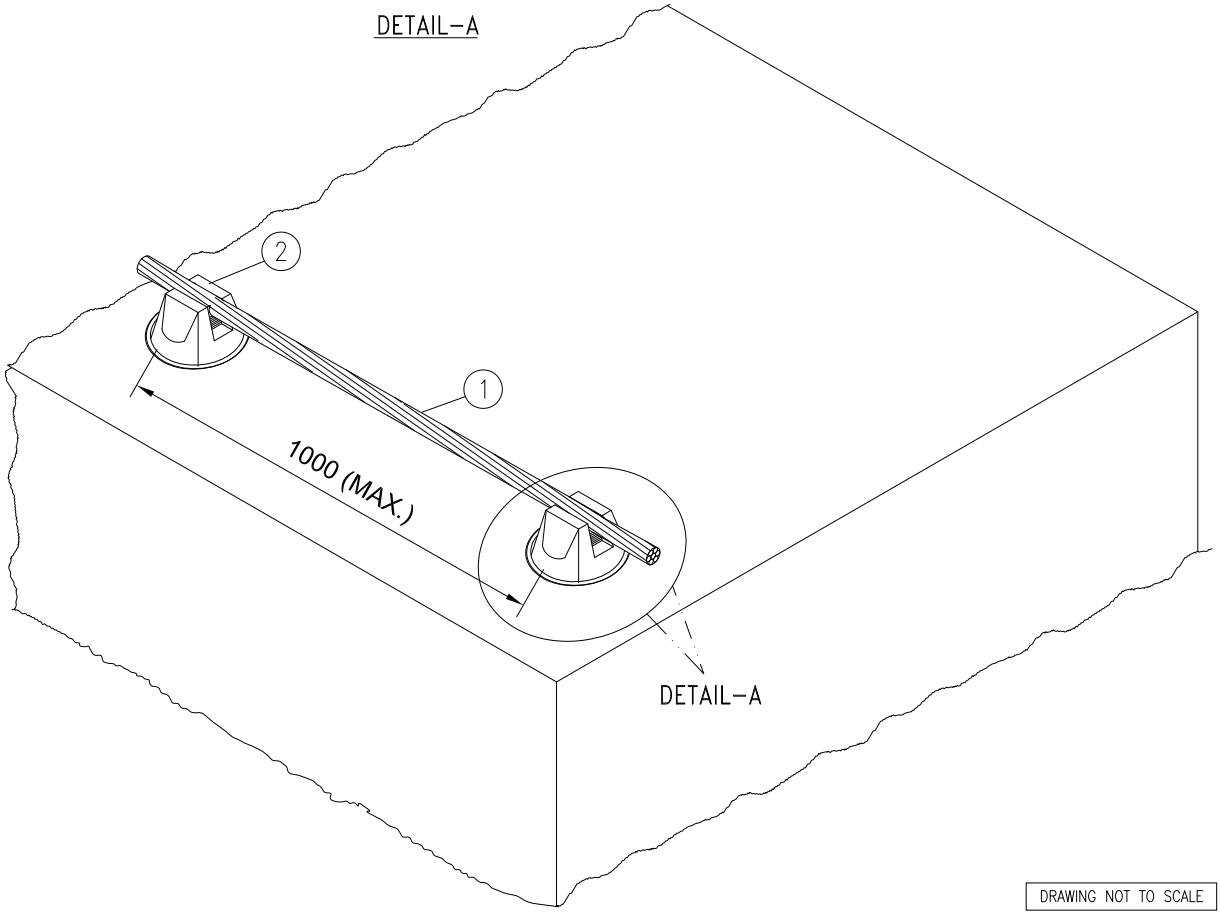

DRAWING NOT TO SCALE

NOTE:

1) ALL DIMENSIONS ARE IN 'mm' UNLESS OTHERWISE SPECIFIED.

Code	Contract No.	Document ID	Part	Rev.
		PIN–LEP–ELT–4004		00

Rev.	Date	Name (Drawn/Prepared)	Date	Name (Checked)	Date	Name (Approved)	Description	Acc. Code	Cat. Code	Acc. Code	Status
00	02/01/17	KRP MLD	02/01/17	RPM	02/01/17	RPM	ISSUED AS STANDARD				

BAR–Code

Store Location: Server/Share

Store Location: Folder

Store Name LPC1

Pro. Unit	TON	Group	Type of Document	Sheet
				1 / 1

Con. Unit	Scale	Order No.
	NTS	

thyssenkrupp

	Date	Name
Drawn	02/01/17	KRP
Prepared	02/01/17	MLD
Checked	02/01/17	RPM
Approved	02/01/17	RPM

Description

INSTALLATION STANDARDS – LIGHTNING PROTECTION
LIGHTNING CONDUCTOR, ROUND, ON FLAT SURFACE WITH CONCRETE WEIGHT (LPC1)

ISO A4

UH_BO_ISO_A4_P_E_tktSIndia.dwg / AG03_UH_BO_ISO_A4_P.dwg / 14.12.2016

© thyssenkrupp Industrial Solutions (India) Private Limited 2017. All rights reserved

ITEM	DESCRIPTION	MATERIAL	QTY.	SUPPLY BY	INSTALLATION BY
1	LIGHTNING CONDUCTOR, ROUND, ø8mm (AL) / ø10mm (HDGI)	ALUMINIUM/HDGI	AS REQUIRED	ELECTRICAL CONTRACTOR	ELECTRICAL CONTRACTOR
2	CONDUCTOR HOLDER SUITABLE FOR BONDING DIRECTLY TO FLAT SURFACE & TO ACCOMMODATE ROUND CONDUCTOR UP TO ø10mm ALONG WITH SUITABLE ACCESSORIES (NUTS, BOLTS, WASHERS ETC.) AS INDICATED	HDGI AND/OR POLYAMIDE	AS REQUIRED	ELECTRICAL CONTRACTOR	ELECTRICAL CONTRACTOR
3	ADHESIVE FOR CONDUCTOR HOLDER	–	AS REQUIRED	ELECTRICAL CONTRACTOR	ELECTRICAL CONTRACTOR

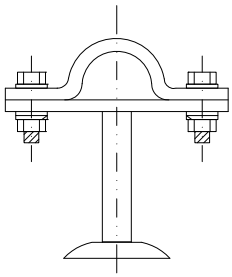

VIEW–A

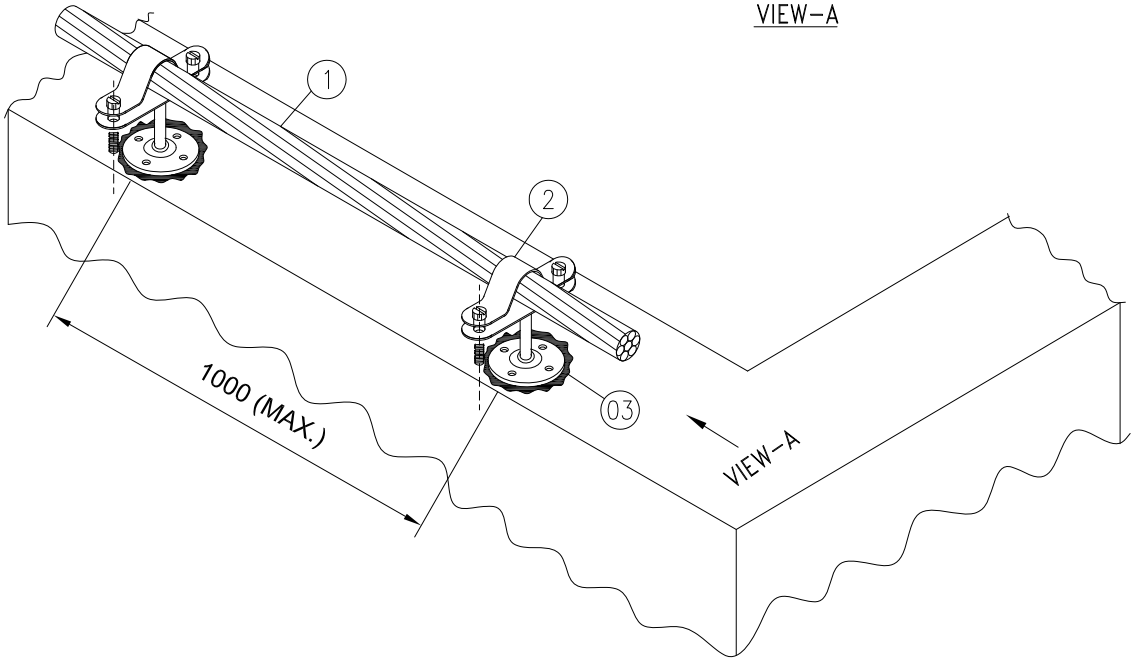

DRAWING NOT TO SCALE

NOTE:

1) ALL DIMENSIONS ARE IN 'mm' UNLESS OTHERWISE SPECIFIED.

Code	Contract No.	Document ID	Part	Rev.
		PIN–LEP–ELT–4004		00

Rev.	Date	Name (Drawn/Prepared)	Date	Name (Checked)	Date	Name (Approved)	Description	Acc. Code	Cat. Code	Acc. Code	Status
00	02/01/17	KRP MLD	02/01/17	RPM	02/01/17	RPM	ISSUED AS STANDARD				

BAR–Code

Store Location: Server/Share

Store Location: Folder

Store Name LPC2

Pro. Unit	TON	Group	Type of Document	Sheet
				1 / 1

Con. Unit	Scale	Order No.
	NTS	

thyssenkrupp

	Date	Name
Drawn	02/01/17	KRP
Prepared	02/01/17	MLD
Checked	02/01/17	RPM
Approved	02/01/17	RPM

Description

INSTALLATION STANDARDS – LIGHTNING PROTECTION
LIGHTNING CONDUCTOR ON FLAT SURFACE WITH ADHESION (LPC2)

ISO A4

UH_BO_ISO_A4_P_E_tktSIndia.dwg / AG03_UH_BO_ISO_A4_P.dwg / 14.12.2016

© thyssenkrupp Industrial Solutions (India) Private Limited 2017. All rights reserved

ITEM	DESCRIPTION	MATERIAL	QTY.	SUPPLY BY	INSTALLATION BY
1	LIGHTNING CONDUCTOR, ROUND, ø8mm (AL) / ø10mm (HDGI)	HDGI	AS REQUIRED	ELECTRICAL CONTRACTOR	ELECTRICAL CONTRACTOR
2	CONDUCTOR HOLDER FOR ROUND CONDUCTOR UP TO ø10mm WITH FEMALE THREAD & THROUGH HOLE FOR SCREWS	POLYAMIDE OR EQUIVALENT	AS REQUIRED	ELECTRICAL CONTRACTOR	ELECTRICAL CONTRACTOR
3	ACCESSORIES TO FIX CONDUCTOR HOLDER TO FLAT SURFACE (SCREW, PLASTIC ANCHOR ETC.)	HDGI	AS REQUIRED	ELECTRICAL CONTRACTOR	ELECTRICAL CONTRACTOR

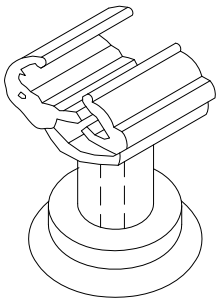

ENLARGED VIEW OF ITEM-2

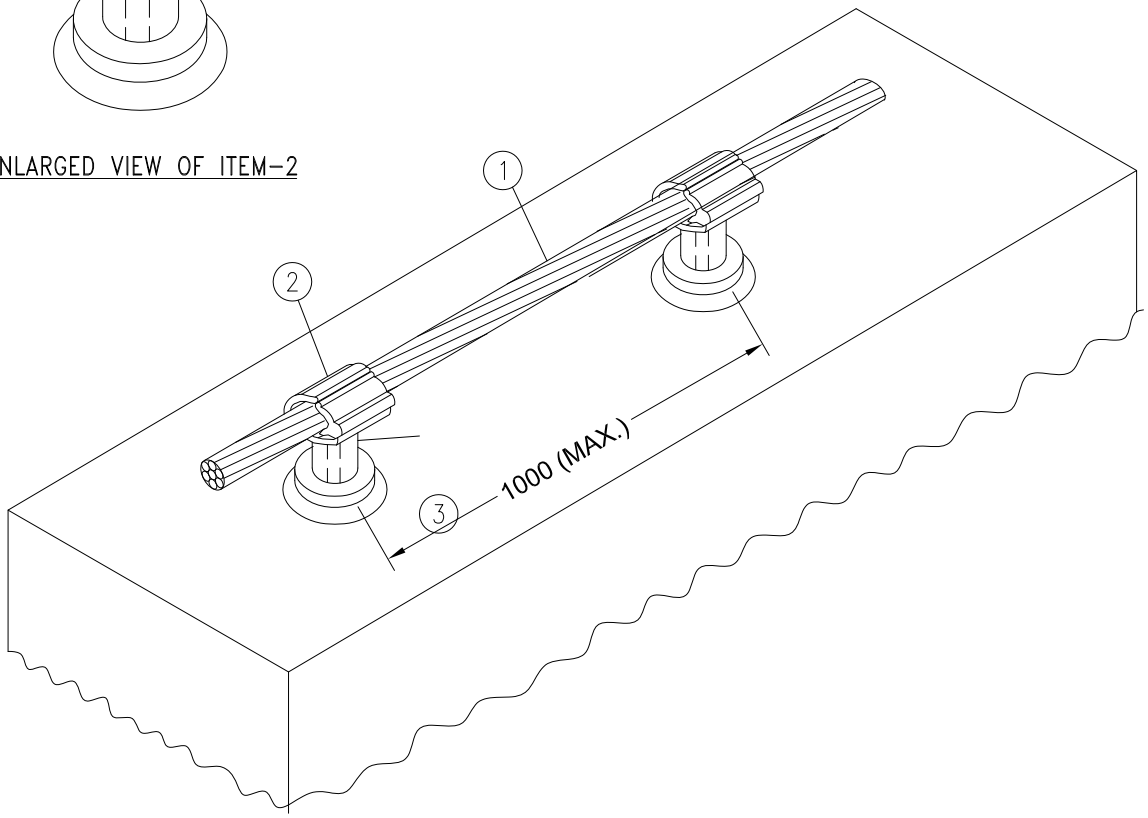

DRAWING NOT TO SCALE

NOTES:

1) ALL DIMENSIONS ARE IN 'mm' UNLESS OTHERWISE SPECIFIED.

2) DETAILS OF SCREW (M6 OR M8 ETC.) SHALL BE DECIDED AT SITE BASED ON ACTUAL REQUIREMENT OF ITEM NO. 2

Code	Contract No.	Document ID	Part	Rev.
		PIN-LEP-ELT-4004		00

Rev.	Date	Name (Drawn/Prepared)	Date	Name (Checked)	Date	Name (Approved)	Description	Acc. Code	Cat. Code	Acc. Code	Status
00	02/01/17	KRP MLD	02/01/17	RPM	02/01/17	RPM	ISSUED AS STANDARD				

BAR-Code

Store Location: Server/Share

Store Location: Folder

Store Name LPC3

Pro. Unit	TON	Group	Type of Document	Sheet
				1 / 1

Con. Unit	Scale	Order No.
	NTS	

thyssenkrupp

	Date	Name
Drawn	02/01/17	KRP
Prepared	02/01/17	MLD
Checked	02/01/17	RPM
Approved	02/01/17	RPM

Description

INSTALLATION STANDARDS – LIGHTNING PROTECTION
LIGHTNING CONDUCTOR ON FLAT SURFACE WITH CONDUCTOR HOLDER (LPC3)

ISO A4

UH_BO_ISO_A4_P_E_tktSIndia.dwg / AG03_UH_BO_ISO_A4_P.dwg / 14.12.2016

© thyssenkrupp Industrial Solutions (India) Private Limited 2017. All rights reserved

ITEM	DESCRIPTION	MATERIAL	QTY.	SUPPLY BY	INSTALLATION BY
1	LIGHTNING CONDUCTOR, ROUND, ø8mm (AL) / ø10mm (HDGI)	ALUMINIUM/ HDGI	AS REQUIRED	ELECTRICAL CONTRACTOR	ELECTRICAL CONTRACTOR
2	SADDLE WITH BASE STRIP & ACCESSORIES AS INDICATED (M6 SCREWS, WASHERS, PLASTIC ANCHORS ETC.)	HDGI	AS REQUIRED	ELECTRICAL CONTRACTOR	ELECTRICAL CONTRACTOR
3	INSULATING BASE STRIP	PVC OR EQUIVALENT	AS REQUIRED	ELECTRICAL CONTRACTOR	ELECTRICAL CONTRACTOR

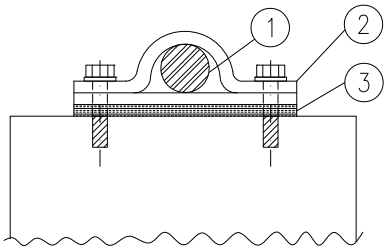

VIEW–A

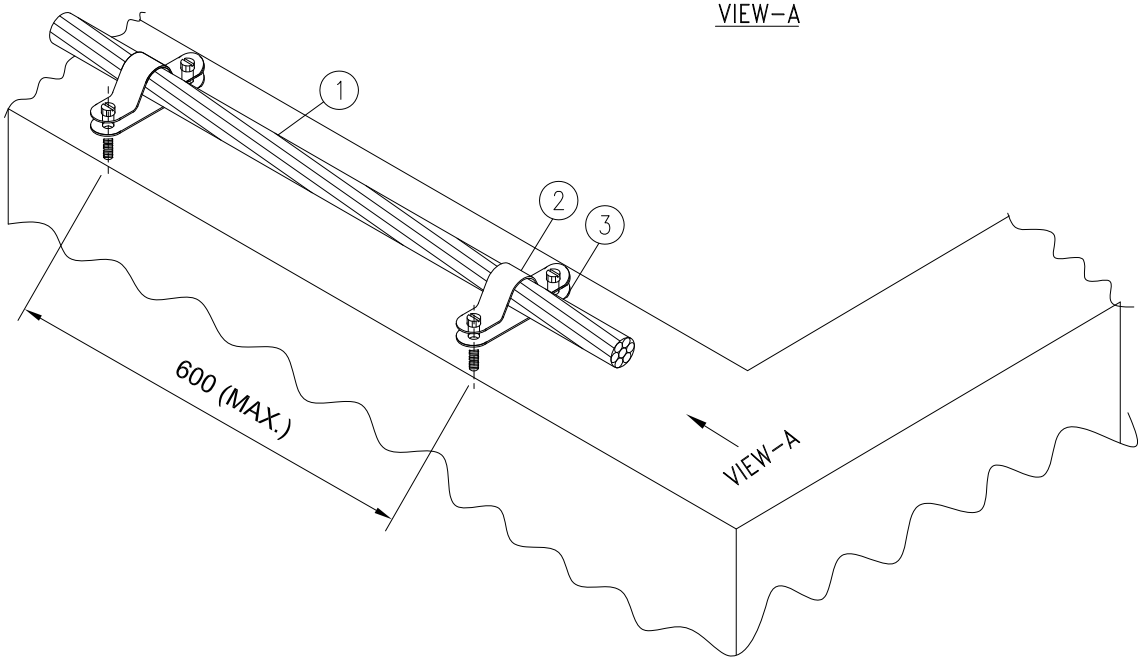

DRAWING NOT TO SCALE

NOTE:
1) ALL DIMENSIONS ARE IN 'mm' UNLESS OTHERWISE SPECIFIED.

Code	Contract No.	Document ID	Part	Rev.
		PIN–LEP–ELT–4004		00

Rev.	Date	Name (Drawn/Prepared)		Date	Name (Checked)		Date	Name (Approved)	Description	Acc. Code	Cat. Code	Acc. Code	Status
00	02/01/17	KRP	MLD	02/01/17	RPM		02/01/17	RPM	ISSUED AS STANDARD				

BAR–Code

Store Location: Server/Share
Store Location: Folder
Store Name LPC4

Pro. Unit	TON	Group	Type of Document	Sheet
				1 / 1

Con. Unit	Scale	Order No.
	NTS	

thyssenkrupp

	Date	Name
Drawn	02/01/17	KRP
Prepared	02/01/17	MLD
Checked	02/01/17	RPM
Approved	02/01/17	RPM

Description
INSTALLATION STANDARDS – LIGHTNING PROTECTION
LIGHTNING CONDUCTOR ON FLAT SURFACE WITH SADDLE/CLAMP (LPC4)

ISO A4

UH_BO_ISO_A4_P_E_tktSIndia.dwg / AG03_UH_BO_ISO_A4_P.dwg / 14.12.2016

© thyssenkrupp Industrial Solutions (India) Private Limited 2017. All rights reserved

ITEM	DESCRIPTION	MATERIAL	QTY.	SUPPLY BY	INSTALLATION BY
1	LIGHTNING CONDUCTOR, ROUND, ø8mm (AL) / ø10mm (HDGI)	ALUMINIUM/ HDGI	AS REQUIRED	ELECTRICAL CONTRACTOR	ELECTRICAL CONTRACTOR
2	CONDUCTOR STRAP SUITABLE FOR ROUND CONDUCTOR UP TO ø10mm (REFER NOTE-2 & 3)	HDGI	AS REQUIRED	ELECTRICAL CONTRACTOR	ELECTRICAL CONTRACTOR

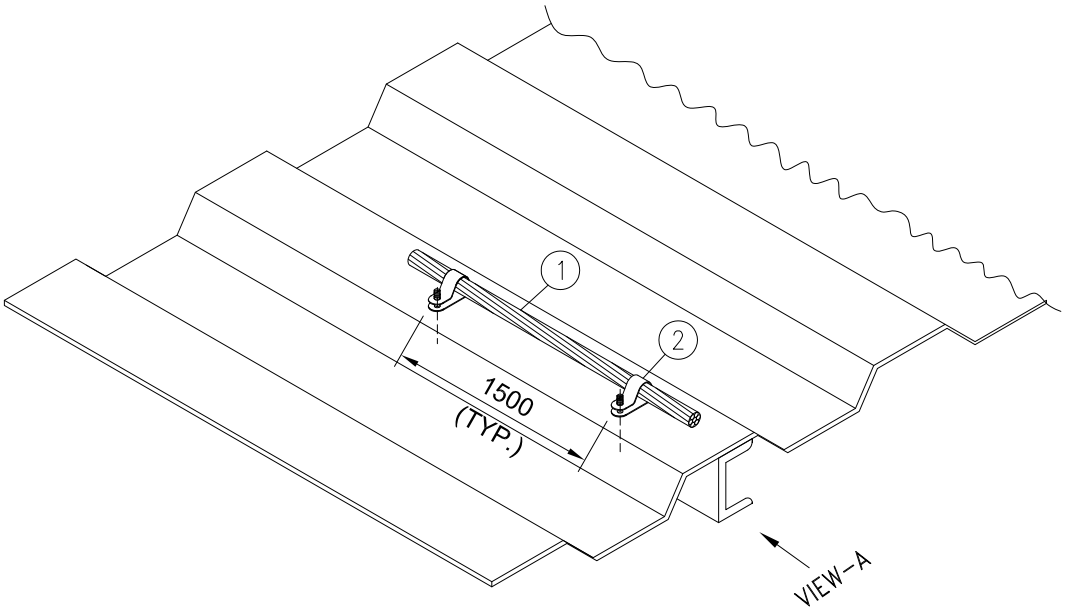

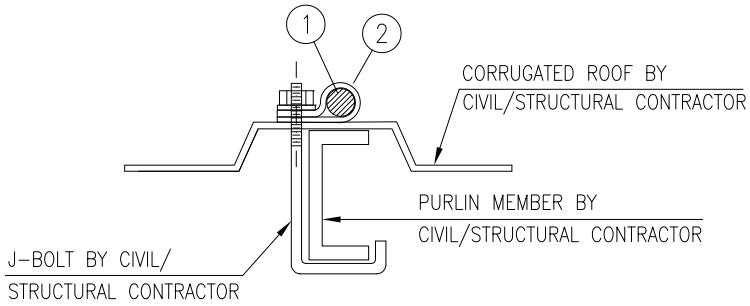

VIEW-A

DRAWING NOT TO SCALE

NOTES:

1) ALL DIMENSIONS ARE IN 'mm' UNLESS OTHERWISE SPECIFIED.
2) DURING ENGINEERING CIVIL SHALL BE INFORMED ABOUT THE ARRANGEMENT IN ORDER TO SELECT LONGER LENGTH OF J-BOLT.
3) STRAP HOLES SHALL BE SUITABLE FOR SIZE OF THE J-BOLT. DIMENSION OF J-BOLT SHALL BE VERIFIED AT SITE BEFORE INSTALLATION.

Code	Contract No.	Document ID	Part	Rev.
		PIN-LEP-ELT-4004		00

Rev.	Date	Name (Drawn/Prepared)	Date	Name (Checked)	Date	Name (Approved)	Description	Acc. Code	Cat. Code	Acc. Code	Status
00	02/01/17	KRP MLD	02/01/17	RPM	02/01/17	RPM	ISSUED AS STANDARD				

BAR-Code

Store Location: Server/Share

Store Location: Folder

Store Name LPC5

Pro. Unit	TON	Group	Type of Document	Sheet
				1 / 1

Con. Unit	Scale	Order No.
	NTS	

thyssenkrupp

	Date	Name
Drawn	02/01/17	KRP
Prepared	02/01/17	MLD
Checked	02/01/17	RPM
Approved	02/01/17	RPM

Description
INSTALLATION STANDARDS – LIGHTNING PROTECTION LIGHTNING CONDUCTOR ON CORRUGATED ROOF (LPC5)

ISO A4

UH_BO_ISO_A4_P_E_tktSIndia.dwg / AG03_UH_BO_ISO_A4_P.dwg / 14.12.2016

© thyssenkrupp Industrial Solutions (India) Private Limited 2017. All rights reserved

ITEM	DESCRIPTION	MATERIAL	QTY.	SUPPLY BY	INSTALLATION BY
1	LIGHTNING CONDUCTOR, STRIP, 25X3mm	HDGI	AS REQUIRED	ELECTRICAL CONTRACTOR	ELECTRICAL CONTRACTOR
2	CONDUCTOR HOLDER FOR STRIP CONDUCTOR UP TO 30X3.5mm WITH INSULATED BASE (PLASTIC) & THROUGH HOLE FOR SCREWS	HDGI	AS REQUIRED	ELECTRICAL CONTRACTOR	ELECTRICAL CONTRACTOR
3	ACCESSORIES TO FIX CONDUCTOR HOLDER TO FLAT SURFACE (SCREW, PLASTIC ANCHOR ETC.)	HDGI	AS REQUIRED	ELECTRICAL CONTRACTOR	ELECTRICAL CONTRACTOR

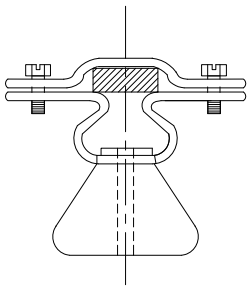

VIEW–A

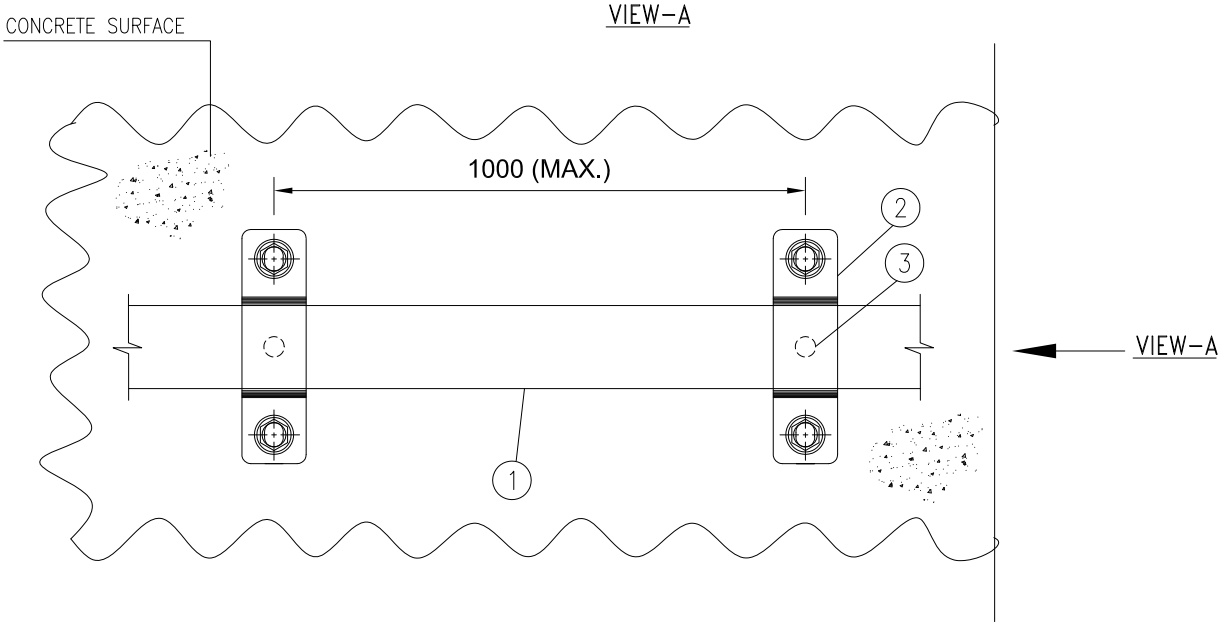

DRAWING NOT TO SCALE

NOTES:

1) ALL DIMENSIONS ARE IN 'mm' UNLESS OTHERWISE SPECIFIED.

2) DETAILS OF SCREW (M6 OR M8 ETC.) SHALL BE DECIDED AT SITE BASED ON ACTUAL REQUIREMENT OF ITEM NO. 2

Code	Contract No.	Document ID	Part	Rev.
		PIN–LEP–ELT–4004		00

Rev.	Date	Name (Drawn/Prepared)	Date	Name (Checked)	Date	Name (Approved)	Description	Acc. Code	Cat. Code	Acc. Code	Status
00	02/01/17	KRP MLD	02/01/17	RPM	02/01/17	RPM	ISSUED AS STANDARD				

BAR–Code

Store Location: Server/Share

Store Location: Folder

Store Name LPC6

Pro. Unit	TON	Group	Type of Document	Sheet
				1 / 1

Con. Unit	Scale	Order No.
	NTS	

thyssenkrupp

	Date	Name
Drawn	02/01/17	KRP
Prepared	02/01/17	MLD
Checked	02/01/17	RPM
Approved	02/01/17	RPM

Description

INSTALLATION STANDARDS – LIGHTNING PROTECTION
LIGHTNING CONDUCTOR, STRIP, ON FLAT SURFACE WITH CONDUCTOR HOLDER (LPC6)

ISO A4

UH_BO_ISO_A4_P_E_tktSIndia.dwg / AG03_UH_BO_ISO_A4_P.dwg / 14.12.2016

© thyssenkrupp Industrial Solutions (India) Private Limited 2017. All rights reserved

UH_BO_ISO_A4_P_E_tktSIndia.dwg / AG03_UH_BO_ISO_A4_P.dwg / 14.12.2016

ITEM	DESCRIPTION	MATERIAL	QTY.	SUPPLY BY	INSTALLATION BY
1	LIGHTNING CONDUCTOR, STRIP, 25X3mm	HDGI	AS REQUIRED	ELECTRICAL CONTRACTOR	ELECTRICAL CONTRACTOR

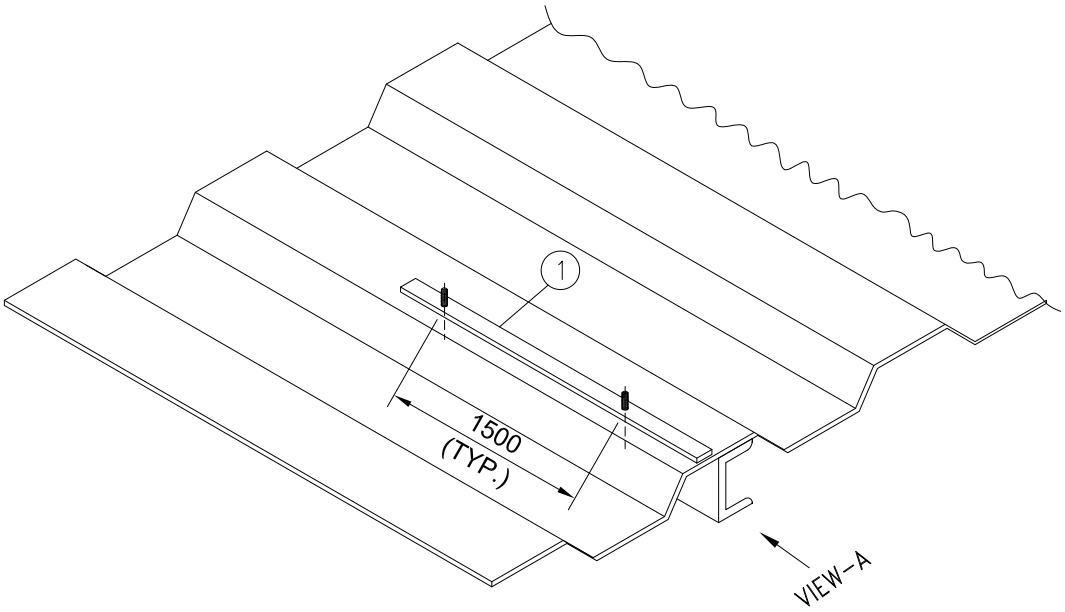

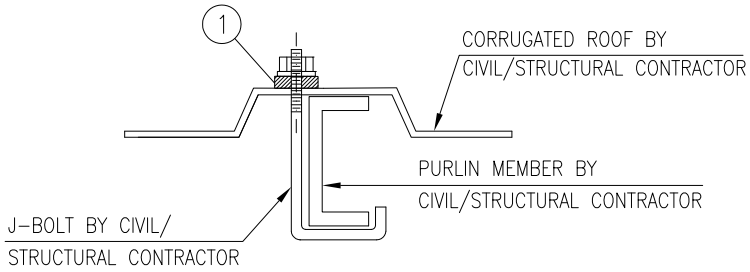

VIEW-A

DRAWING NOT TO SCALE

NOTES:

1) ALL DIMENSIONS ARE IN 'mm' UNLESS OTHERWISE SPECIFIED.
2) DURING ENGINEERING CIVIL SHALL BE INFORMED ABOUT THE ARRANGEMENT IN ORDER TO SELECT LONGER LENGTH OF J-BOLT.

Code	Contract No.	Document ID	Part	Rev.
		PIN-LEP-ELT-4004		00

Rev.	Date	Name (Drawn/Prepared)	Date	Name (Checked)	Date	Name (Approved)	Description	Acc. Code	Cat. Code	Acc. Code	Status
00	02/01/17	KRP / MLD	02/01/17	RPM	02/01/17	RPM	ISSUED AS STANDARD				

BAR-Code

Store Location: Server/Share

Store Location: Folder

Store Name LPC7

Pro. Unit	TON	Group	Type of Document	Sheet
				1 / 1

Con. Unit	Scale	Order No.
	NTS	

thyssenkrupp

	Date	Name
Drawn	02/01/17	KRP
Prepared	02/01/17	MLD
Checked	02/01/17	RPM
Approved	02/01/17	RPM

Description
INSTALLATION STANDARDS – LIGHTNING PROTECTION
LIGHTNING CONDUCTOR, STRIP, ON CORRUGATED ROOF (LPC7)

ISO A4

© thyssenkrupp Industrial Solutions (India) Private Limited 2017. All rights reserved

ITEM	DESCRIPTION	MATERIAL	QTY.	SUPPLY BY	INSTALLATION BY
1	LIGHTNING CONDUCTOR, ROUND, ø8mm (AL) / ø10mm (HDGI)	ALUMINIUM/ HDGI	AS REQUIRED	ELECTRICAL CONTRACTOR	ELECTRICAL CONTRACTOR
2	SADDLE WITH BASE STRIP & ACCESSORIES AS INDICATED (M6 SCREWS, WASHERS, PLASTIC ANCHORS ETC.)	HDGI	AS REQUIRED	ELECTRICAL CONTRACTOR	ELECTRICAL CONTRACTOR
3	INSULATING BASE STRIP	PVC OR EQUIVALENT	AS REQUIRED	ELECTRICAL CONTRACTOR	ELECTRICAL CONTRACTOR

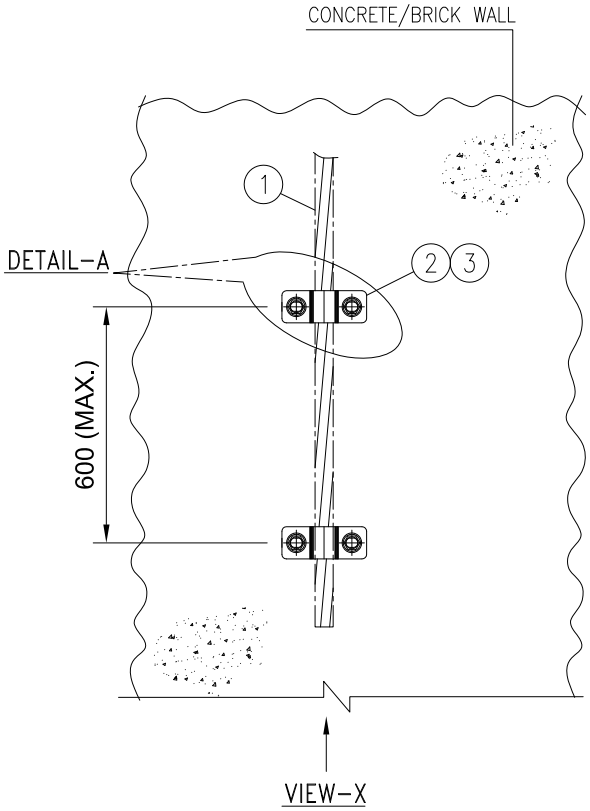

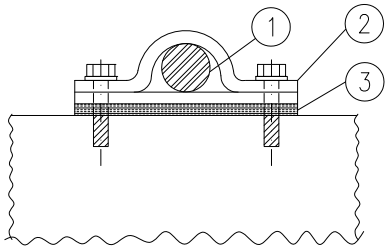

VIEW-X

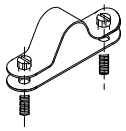

DETAIL-A

DRAWING NOT TO SCALE

NOTE:

1) ALL DIMENSIONS ARE IN 'mm' UNLESS OTHERWISE SPECIFIED.

Code	Contract No.	Document ID	Part	Rev.
		PIN-LEP-ELT-4004		00

Rev.	Date	Name (Drawn/Prepared)		Date	Name (Checked)		Date	Name (Approved)		Description	Acc. Code	Cat. Code	Acc. Code	Status
00	02/01/17	KRP	MLD	02/01/17	RPM		02/01/17	RPM		ISSUED AS STANDARD				

BAR-Code

Store Location: Server/Share

Store Location: Folder

Store Name LPD1

Pro. Unit	TON	Group	Type of Document	Sheet
				1 / 1

Con. Unit	Scale	Order No.
	NTS	

thyssenkrupp

	Date	Name
Drawn	02/01/17	KRP
Prepared	02/01/17	MLD
Checked	02/01/17	RPM
Approved	02/01/17	RPM

Description

INSTALLATION STANDARDS – LIGHTNING PROTECTION LIGHTNING DOWN CONDUCTOR ON WALL WITH SADDLE/CLAMP (LPD1)

ISO A4

UH_BO_ISO_A4_P_E_tktSIndia.dwg / AG03_UH_BO_ISO_A4_P.dwg / 14.12.2016

© thyssenkrupp Industrial Solutions (India) Private Limited 2017. All rights reserved

ITEM	DESCRIPTION	MATERIAL	QTY.	SUPPLY BY	INSTALLATION BY
1	LIGHTNING CONDUCTOR, ROUND, ø8mm (AL) / ø10mm (HDGI)	ALUMINIUM/ HDGI	AS REQUIRED	ELECTRICAL CONTRACTOR	ELECTRICAL CONTRACTOR
2	CONDUCTOR HOLDER FOR ROUND CONDUCTOR UP TO ø10mm WITH FEMALE THREAD & THROUGH HOLE FOR SCREWS	POLYAMIDE OR EQUIVALENT	AS REQUIRED	ELECTRICAL CONTRACTOR	ELECTRICAL CONTRACTOR
3	ACCESSORIES TO FIX CONDUCTOR HOLDER TO WALL (SCREW, PLASTIC ANCHOR ETC.)	HDGI	AS REQUIRED	ELECTRICAL CONTRACTOR	ELECTRICAL CONTRACTOR

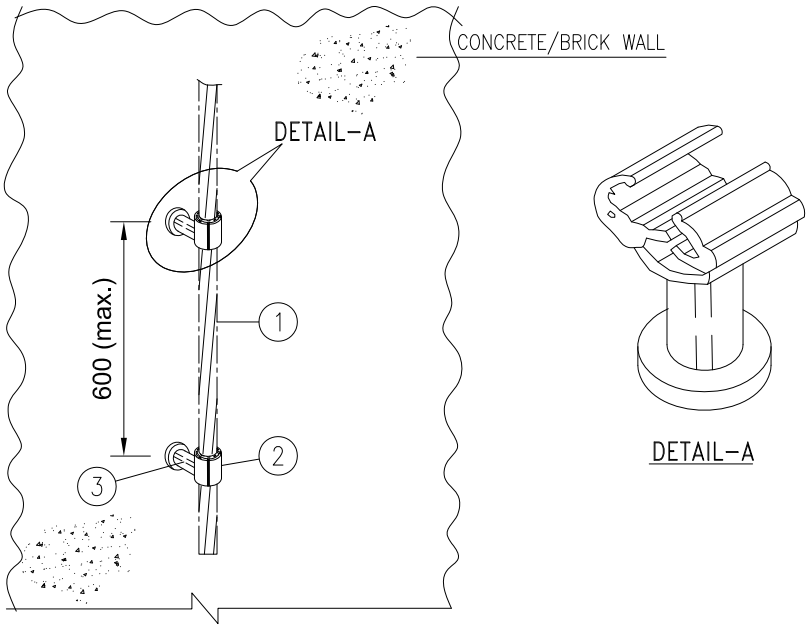

DRAWING NOT TO SCALE

NOTES:

1) ALL DIMENSIONS ARE IN 'mm' UNLESS OTHERWISE SPECIFIED.

2) DETAILS OF SCREW (M6 OR M8 ETC.) SHALL BE DECIDED AT SITE BASED ON ACTUAL REQUIREMENT OF ITEM NO. 2

Code	Contract No.	Document ID	Part	Rev.
		PIN–LEP–ELT–4004		00

Rev.	Date	Name (Drawn/Prepared)	Date	Name (Checked)	Date	Name (Approved)	Description	Acc. Code	Cat. Code	Acc. Code	Status
00	02/01/17	KRP	02/01/17	MLD	02/01/17	RPM	02/01/17	RPM	ISSUED AS STANDARD				

BAR–Code

Store Location: Server/Share

Store Location: Folder

Store Name LPD2

Pro. Unit	TON	Group	Type of Document	Sheet
				1 / 1

Con. Unit	Scale	Order No.
	NTS	

thyssenkrupp

	Date	Name
Drawn	02/01/17	KRP
Prepared	02/01/17	MLD
Checked	02/01/17	RPM
Approved	02/01/17	RPM

Description

INSTALLATION STANDARDS – LIGHTNING PROTECTION
LIGHTNING DOWN CONDUCTOR ON WALL WITH CONDUCTOR HOLDER (LPD2)

ISO A4

UH_BO_ISO_A4_P_E_tktSIndia.dwg / AG03_UH_BO_ISO_A4_P.dwg / 14.12.2016

© thyssenkrupp Industrial Solutions (India) Private Limited 2017. All rights reserved

ITEM	DESCRIPTION	MATERIAL	QTY.	SUPPLY BY	INSTALLATION BY
1	LIGHTNING CONDUCTOR, STRIP, 25X3mm	HDGI	AS REQUIRED	ELECTRICAL CONTRACTOR	ELECTRICAL CONTRACTOR
2	CONDUCTOR HOLDER FOR STRIP CONDUCTOR UP TO 30X3.5mm WITH INSULATED BASE (PLASTIC) & THROUGH HOLE FOR SCREWS	HDGI	AS REQUIRED	ELECTRICAL CONTRACTOR	ELECTRICAL CONTRACTOR
3	ACCESSORIES TO FIX CONDUCTOR HOLDER TO FLAT SURFACE (SCREW, PLASTIC ANCHOR ETC.)	HDGI	AS REQUIRED	ELECTRICAL CONTRACTOR	ELECTRICAL CONTRACTOR

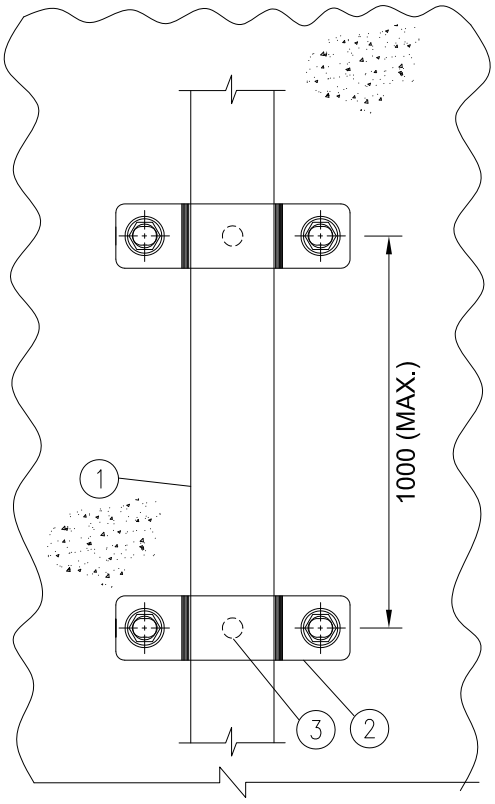

VIEW–A

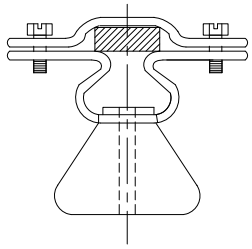

VIEW–A

DRAWING NOT TO SCALE

NOTES:

1) ALL DIMENSIONS ARE IN 'mm' UNLESS OTHERWISE SPECIFIED.

2) DETAILS OF SCREW (M6 OR M8 ETC.) SHALL BE DECIDED AT SITE BASED ON ACTUAL REQUIREMENT OF ITEM NO. 2

Code	Contract No.	Document ID	Part	Rev.
		PIN–LEP–ELT–4004		00

Rev.	Date	Name (Drawn/Prepared)	Date	Name (Checked)	Date	Name (Approved)	Description	Acc. Code	Cat. Code	Acc. Code	Status
00	02/01/17	KRP	02/01/17	MLD	02/01/17	RPM	ISSUED AS STANDARD				

BAR–Code

Store Location: Server/Share

Store Location: Folder

Store Name LPD3

Pro. Unit	TON	Group	Type of Document	Sheet
				1 / 1

Con. Unit	Scale	Order No.
	NTS	

thyssenkrupp

	Date	Name
Drawn	02/01/17	KRP
Prepared	02/01/17	MLD
Checked	02/01/17	RPM
Approved	02/01/17	RPM

Description

INSTALLATION STANDARDS – LIGHTNING PROTECTION
LIGHTNING DOWN CONDUCTOR, STRIP, ON WALL WITH CONDUCTOR HOLDER (LPD3)

ISO A4

UH_BO_ISO_A4_P_E_tktSIndia.dwg / AG03_UH_BO_ISO_A4_P.dwg / 14.12.2016

© thyssenkrupp Industrial Solutions (India) Private Limited 2017. All rights reserved

ITEM	DESCRIPTION	MATERIAL	QTY.	SUPPLY BY	INSTALLATION BY
1	LIGHTNING CONDUCTOR, ROUND, ø8mm (AL) / ø10mm (HDGI)/ FLAT STRIP CONDUCTOR UP TO 30x3.5mm	ALUMINIUM/ HDGI	AS REQUIRED	ELECTRICAL CONTRACTOR	ELECTRICAL CONTRACTOR
2	ATTACHMENT CLAMP FOR ROUND CONDUCTOR UP TO ø10mm AND FOR FLANGE THICKNESS UP TO 20mm/ FLAT STRIP CONDUCTOR UP TO 30x3.5mm	HDGI	AS REQUIRED	ELECTRICAL CONTRACTOR	ELECTRICAL CONTRACTOR

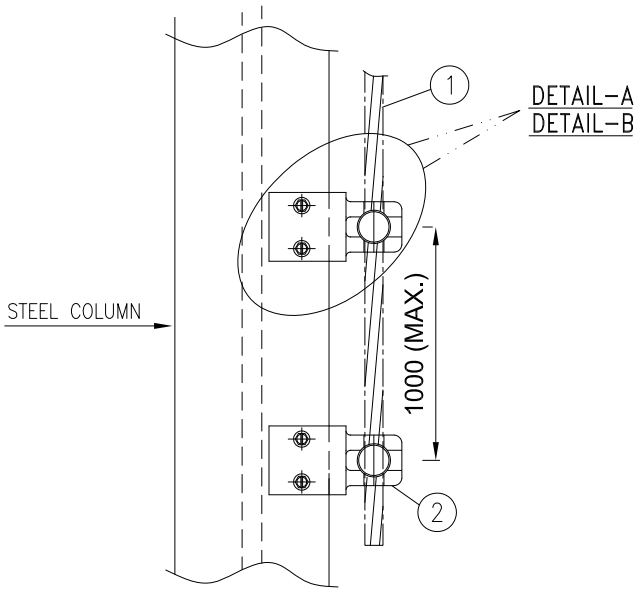

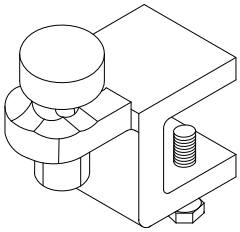

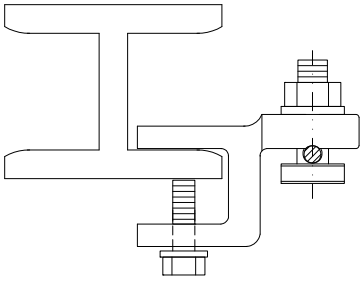

DETAIL–A
(WITH ROUND CONDUCTOR)

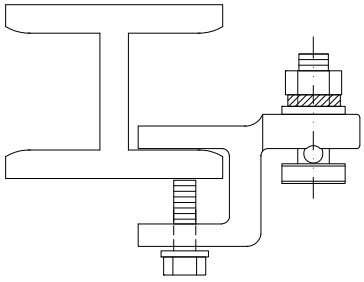

DETAIL–B
(WITH FLAT STRIP CONDUCTOR)

DRAWING NOT TO SCALE

NOTES:

1) ALL DIMENSIONS ARE IN 'mm' UNLESS OTHERWISE SPECIFIED.

2) LENGTH OF BOLT REQUIRED FOR OF FLAT STRIP CONDUCTOR SHALL BE VERIFIED AT SITE.

Code	Contract No.	Document ID	Part	Rev.
		PIN–LEP–ELT–4004		00

Rev.	Date	Name (Drawn/Prepared)	Date	Name (Checked)	Date	Name (Approved)	Description	Acc. Code	Cat. Code	Acc. Code	Status
00	02/01/17	KRP MLD	02/01/17	RPM	02/01/17	RPM	ISSUED AS STANDARD				

BAR–Code

Store Location: Server/Share

Store Location: Folder

Store Name LPD4

Pro. Unit	TON	Group	Type of Document	Sheet
				1 / 1

Con. Unit	Scale	Order No.
	NTS	

thyssenkrupp

	Date	Name
Drawn	02/01/17	KRP
Prepared	02/01/17	MLD
Checked	02/01/17	RPM
Approved	02/01/17	RPM

Description
INSTALLATION STANDARDS – LIGHTNING PROTECTION
LIGHTNING DOWN CONDUCTOR ON STEEL COLUMN WITH ATTACHMENT CLAMP (LPD4)

ISO A4

UH_BO_ISO_A4_P_E_tktSIndia.dwg / AG03_UH_BO_ISO_A4_P.dwg / 14.12.2016

© thyssenkrupp Industrial Solutions (India) Private Limited 2017. All rights reserved

ITEM	DESCRIPTION	MATERIAL	QTY.	SUPPLY BY	INSTALLATION BY
1	TEST JOINT SUITABLE FOR FOLLOWING COMBINATION OF LIGHTNING CONDUCTORS ALONG WITH FIXING SCREWS A) ROUND, ø8mm/ø10mm TO ROUND, ø8mm/ø10mm B) ROUND, ø8mm/ø10mm TO FLAT STRIP 30X3.5mm C) FLAT STRIP 30X3.5mm TO FLAT STRIP 30X3.5mm	HDGI	1 NO.	ELECTRICAL CONTRACTOR	ELECTRICAL CONTRACTOR
2	ANTI-CORROSIVE TAPE OVER TEST JOINT	BITUMEN CONTENT FABRIC OR EQUIVALENT	AS REQUIRED	ELECTRICAL CONTRACTOR	ELECTRICAL CONTRACTOR

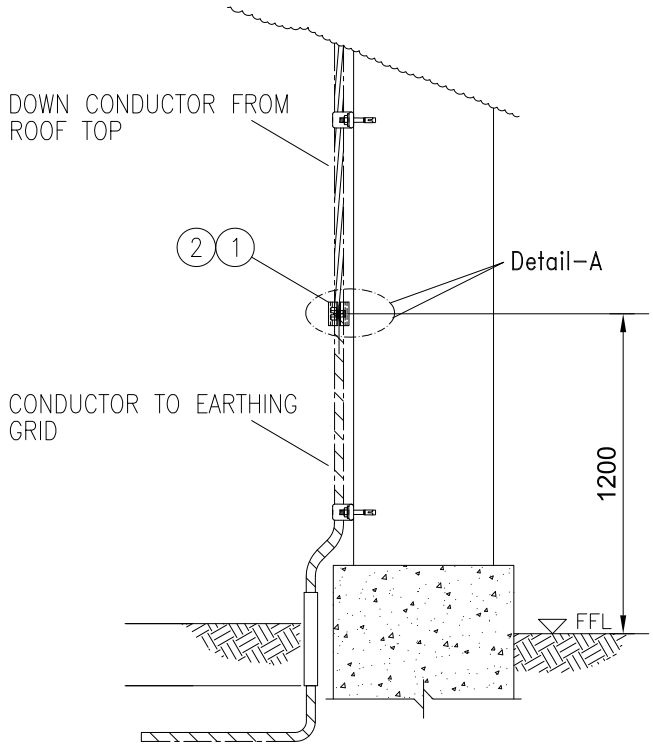

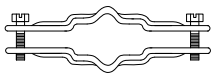

DETAIL-A

DRAWING NOT TO SCALE

NOTE:

1) ALL DIMENSIONS ARE IN 'mm' UNLESS OTHERWISE SPECIFIED.

Code	Contract No.	Document ID	Part	Rev.
		PIN-LEP-ELT-4004		00

Rev.	Date	Name (Drawn/Prepared)		Date	Name (Checked)		Date	Name (Approved)	Description	Acc. Code	Cat. Code	Acc. Code	Status
00	02/01/17	KRP	MLD	02/01/17	RPM		02/01/17	RPM	ISSUED AS STANDARD				

BAR-Code

Store Location: Server/Share

Store Location: Folder

Store Name LPJ1

Pro. Unit	TON	Group	Type of Document	Sheet
				1 / 1

Con. Unit	Scale	Order No.
	NTS	

thyssenkrupp

	Date	Name
Drawn	02/01/17	KRP
Prepared	02/01/17	MLD
Checked	02/01/17	RPM
Approved	02/01/17	RPM

Description
INSTALLATION STANDARDS – LIGHTNING PROTECTION TEST JOINT (LPJ1)

ISO A4

UH_BO_ISO_A4_P_E_tktSIndia.dwg / AG03_UH_BO_ISO_A4_P.dwg / 14.12.2016

© thyssenkrupp Industrial Solutions (India) Private Limited 2017. All rights reserved

UH_BO_ISO_A4_P_E_tktSIndia.dwg / AG03_UH_BO_ISO_A4_P.dwg / 14.12.2016

ITEM	DESCRIPTION	MATERIAL	QTY.	SUPPLY BY	INSTALLATION BY
1	AIR TERMINATION ROD WITH SUITABLE THREADING FOR STAND & CONNECTING TAB FITTED WITH CONNECTOR SUITABLE FOR ROUND CONDUCTOR UP TO ø10mm L = XXXX mm (REFER NOTE-1)	HDGI	1 NO.	ELECTRICAL CONTRACTOR	ELECTRICAL CONTRACTOR
2	STAND WITH SUITABLE FEMALE THREADS	CONCRETE	1 NO.	ELECTRICAL CONTRACTOR	ELECTRICAL CONTRACTOR

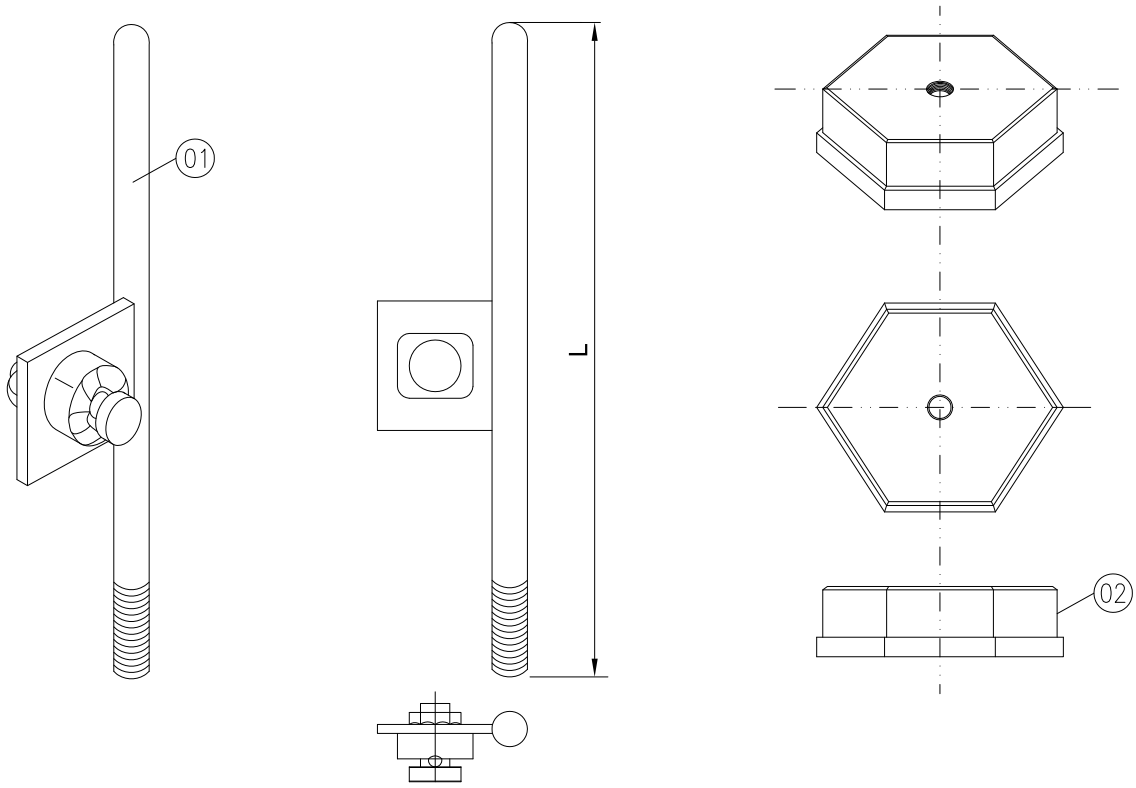

DRAWING NOT TO SCALE

NOTES:

1) LENGTH OF AIR TERMINATION ROD SHALL BE MAX. 1500mm.
2) STAND SHALL BE SECURED PROPERLY TO BASE

Code	Contract No.	Document ID	Part	Rev.
		PIN-LEP-ELT-4004		00

Rev.	Date	Name (Drawn/Prepared)	Date	Name (Checked)	Date	Name (Approved)	Description	Acc. Code	Cat. Code	Acc. Code	Status
00	02/01/17	KRP MLD	02/01/17	RPM	02/01/17	RPM	ISSUED AS STANDARD				

BAR-Code

Store Location: Server/Share

Store Location: Folder

Store Name LPR1

Pro. Unit	TON	Group	Type of Document	Sheet
				1 / 1

Con. Unit	Scale	Order No.
	NTS	

thyssenkrupp

	Date	Name
Drawn	02/01/17	KRP
Prepared	02/01/17	MLD
Checked	02/01/17	RPM
Approved	02/01/17	RPM

Description
INSTALLATION STANDARDS – LIGHTNING PROTECTION
SELF STANDING AIR TERMINATION ROD (LPR1)

ISO A4

© thyssenkrupp Industrial Solutions (India) Private Limited 2017. All rights reserved

UH_BO_ISO_A4_P_E_tktSIndia.dwg / AG03_UH_BO_ISO_A4_P.dwg / 14.12.2016

ITEM	DESCRIPTION	MATERIAL	QTY.	SUPPLY BY	INSTALLATION BY
1	AIR TERMINATION ROD WITH AIR TERMINATION TIP, L = xxxx mm WITH PROVISION TO CONNECT HORIZONTAL LIGHTNING CONDUCTOR AT THE THE BOTTOM (REFER NOTE-1)	HDGI	1 NO.	ELECTRICAL CONTRACTOR	ELECTRICAL CONTRACTOR
2	TRIPOD STAND WITH BRACES/ STRINGS FOR AIR TERMINATION ROD	HDGI	1 NO.	ELECTRICAL CONTRACTOR	ELECTRICAL CONTRACTOR
3	CONCRETE BASE WITH SUITABLE WEIGHT (REFER NOTE-2)	CONCRETE	3 SETS	ELECTRICAL CONTRACTOR	ELECTRICAL CONTRACTOR

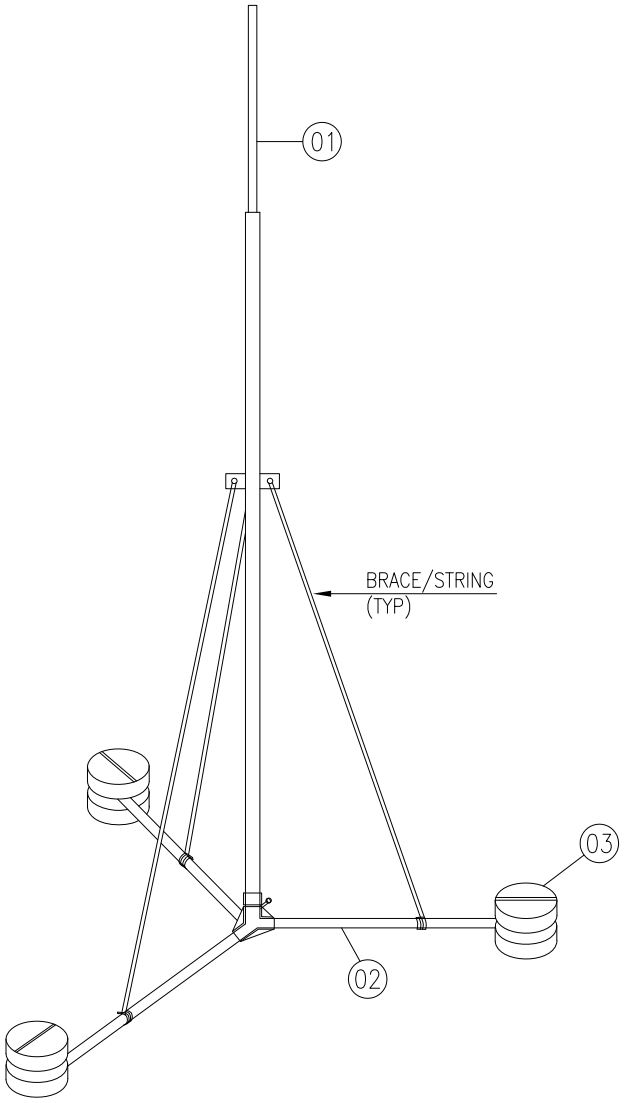

DRAWING NOT TO SCALE

NOTES:

1) TRIPOD ARRANGEMENT IS APPLICABLE FOR AIR TERMINATION RODS HAVING LENGTH 4000-14000mm. LENGTH SHALL BE DECIDED AS PER PROJECT REQUIREMENT.
2) WEIGHT OF CONCRETE BASE VARIES ACCORDING TO LENGTH OF AIR TERMINATION ROD.
3) ARRANGEMENT SHALL BE SECURED PROPERLY TO BASE

Code	Contract No.	Document ID	Part	Rev.
		PIN-LEP-ELT-4004		00

Rev.	Date	Name (Drawn/Prepared)	Date	Name (Checked)	Date	Name (Approved)	Description	Acc. Code	Cat. Code	Acc. Code	Status
00	02/01/17	KRP MLD	02/01/17	RPM	02/01/17	RPM	ISSUED AS STANDARD				

BAR-Code

Store Location: Server/Share

Store Location: Folder

Store Name LPR2

Pro. Unit	TON	Group	Type of Document	Sheet
				1 / 1

Con. Unit	Scale	Order No.
	NTS	

thyssenkrupp

	Date	Name
Drawn	02/01/17	KRP
Prepared	02/01/17	MLD
Checked	02/01/17	RPM
Approved	02/01/17	RPM

Description

INSTALLATION STANDARDS – LIGHTNING PROTECTION AIR TERMINATION ROD WITH TRIPOD ARRANGEMENT (LPR2)

ISO A4

© thyssenkrupp Industrial Solutions (India) Private Limited 2017. All rights reserved

ITEM	DESCRIPTION	MATERIAL	QTY.	SUPPLY BY	INSTALLATION BY
1	AIR TERMINATION ROD, ROUND HEADED ON TOP L = XXXX mm (REFER NOTE-3)	HDGI	1 NO.	ELECTRICAL CONTRACTOR	ELECTRICAL CONTRACTOR
2	150 x 150 x 6 THICK PLATE	MS PAINTED	1 NO.	ELECTRICAL CONTRACTOR	ELECTRICAL CONTRACTOR

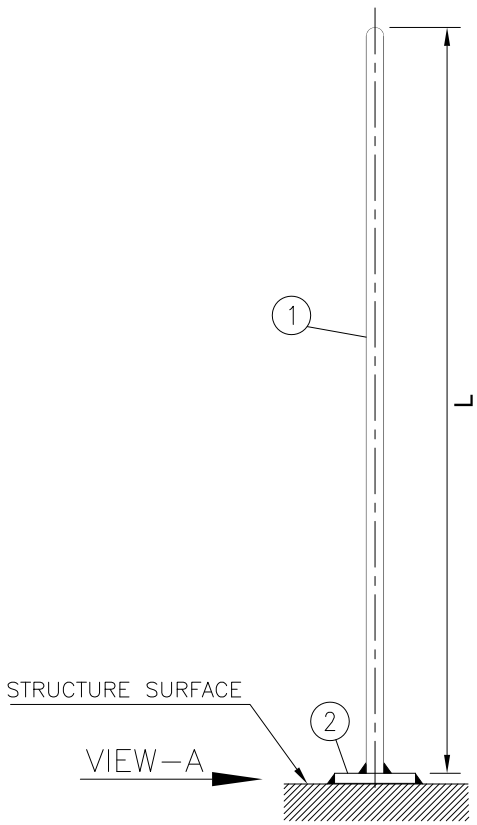

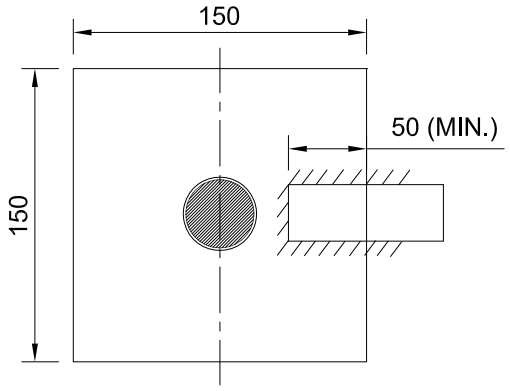

PLAN

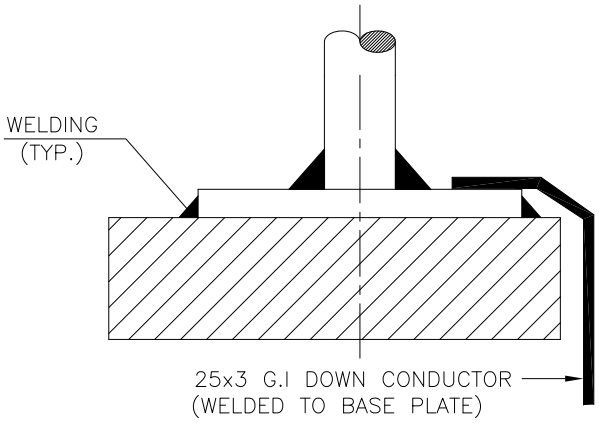

VIEW-A

DRAWING NOT TO SCALE

NOTES :-

1) ALL DIMENSIONS ARE IN mm UNLESS OTHERWISE SPECIFIED.
2) ALL WELDED JOINTS SHALL BE PAINTED WITH BITUMINOUS PAINT.
3) LENGTH OF AIR TERMINATION ROD SHALL BE MAX. 1500mm.

Code	Contract No.	Document ID	Part	Rev.
		PIN-LEP-ELT-4004		00

Rev.	Date	Name (Drawn/Prepared)	Date	Name (Checked)	Date	Name (Approved)	Description	Acc. Code	Cat. Code	Acc. Code	Status
00	02/01/17	KRP MLD	02/01/17	RPM	02/01/17	RPM	ISSUED AS STANDARD				

BAR-Code

Store Location: Server/Share

Store Location: Folder

Store Name LPR3

Pro. Unit	TON	Group	Type of Document	Sheet
				1 / 1

Con. Unit	Scale	Order No.
	NTS	

thyssenkrupp

	Date	Name
Drawn	02/01/17	KRP
Prepared	02/01/17	MLD
Checked	02/01/17	RPM
Approved	02/01/17	RPM

Description
INSTALLATION STANDARDS – LIGHTNING PROTECTION AIR TERMINATION ROD ON STEEL STRUCTURE (LPR3)

ISO A4

UH_BO_ISO_A4_P_E_tktSIndia.dwg / AG03_UH_BO_ISO_A4_P.dwg / 14.12.2016

© thyssenkrupp Industrial Solutions (India) Private Limited 2017. All rights reserved

ITEM	DESCRIPTION	MATERIAL	QTY.	SUPPLY BY	INSTALLATION BY
1	AIR TERMINATION ROD, ROUND HEADED ON TOP L = XXXX mm (REFER NOTE-3)	HDGI	1 NO.	ELECTRICAL CONTRACTOR	ELECTRICAL CONTRACTOR
2	150 x 150 x 6 THICK PLATE	MS PAINTED	1 NO.	ELECTRICAL CONTRACTOR	ELECTRICAL CONTRACTOR
3	ANCHOR FASTNER M10x50 LONG WITH SUITABLE NUT AND WASHER	HDGI	4 NOS.	ELECTRICAL CONTRACTOR	ELECTRICAL CONTRACTOR

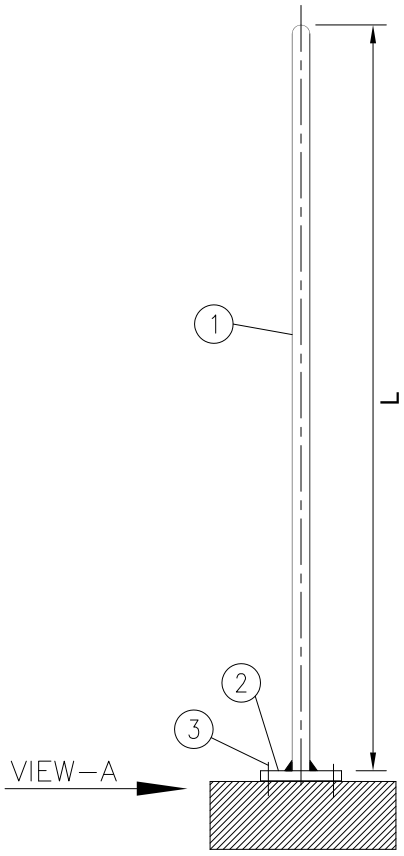

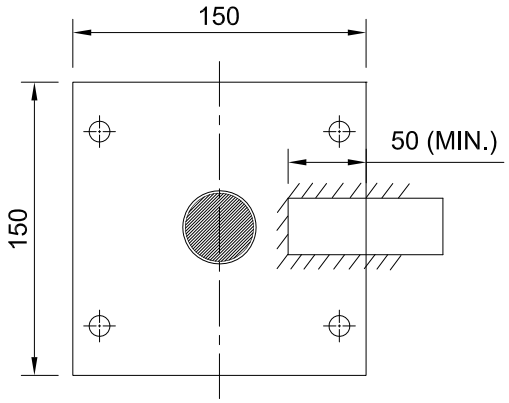

PLAN

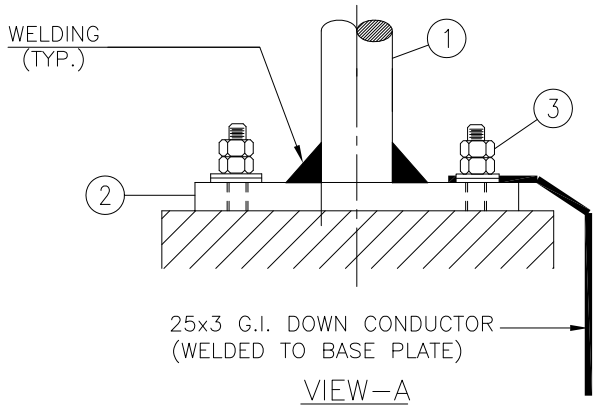

VIEW-A

DRAWING NOT TO SCALE

NOTES :-

1) ALL DIMENSIONS ARE IN mm UNLESS OTHERWISE SPECIFIED.
2) ALL WELDED JOINTS SHALL BE PAINTED WITH BITUMINOUS PAINT.
3) LENGTH OF AIR TERMINATION ROD SHALL BE MAX. 1500mm.

Code	Contract No.	Document ID	Part	Rev.
		PIN-LEP-ELT-4004		00

Rev.	Date	Name (Drawn/Prepared)		Date	Name (Checked)		Date	Name (Approved)	Description	Acc. Code	Cat. Code	Acc. Code	Status
00	02/01/17	KRP	MLD	02/01/17	RPM		02/01/17	RPM	ISSUED AS STANDARD				

BAR-Code

Store Location: Server/Share

Store Location: Folder

Store Name LPR4

Pro. Unit	TON	Group	Type of Document	Sheet
				1 / 1

Con. Unit	Scale	Order No.
	NTS	

thyssenkrupp

	Date	Name
Drawn	02/01/17	KRP
Prepared	02/01/17	MLD
Checked	02/01/17	RPM
Approved	02/01/17	RPM

Description
INSTALLATION STANDARDS - LIGHTNING PROTECTION AIR TERMINATION ROD ON ON CONCRETE SURFACE (LPR4)

ISO A4

UH_BO_ISO_A4_P_E_tktSIndia.dwg / AG03_UH_BO_ISO_A4_P.dwg / 14.12.2016

© thyssenkrupp Industrial Solutions (India) Private Limited 2017. All rights reserved

ITEM	DESCRIPTION	MATERIAL	QTY.	SUPPLY BY	INSTALLATION BY
1	AIR TERMINATION ROD, ROUND HEADED ON TOP L = XXXX mm (REFER NOTE-4)	HDGI	1 NO.	ELECTRICAL CONTRACTOR	ELECTRICAL CONTRACTOR
2	150 x 150 x 6 THICK CHANNEL	MS PAINTED	600mm	ELECTRICAL CONTRACTOR	ELECTRICAL CONTRACTOR
3	SADDLE/ CLAMP WITH ACCESSORIES SUCH AS NUT, BOLT & WASHERS	HDGI	2 SETS	ELECTRICAL CONTRACTOR	ELECTRICAL CONTRACTOR

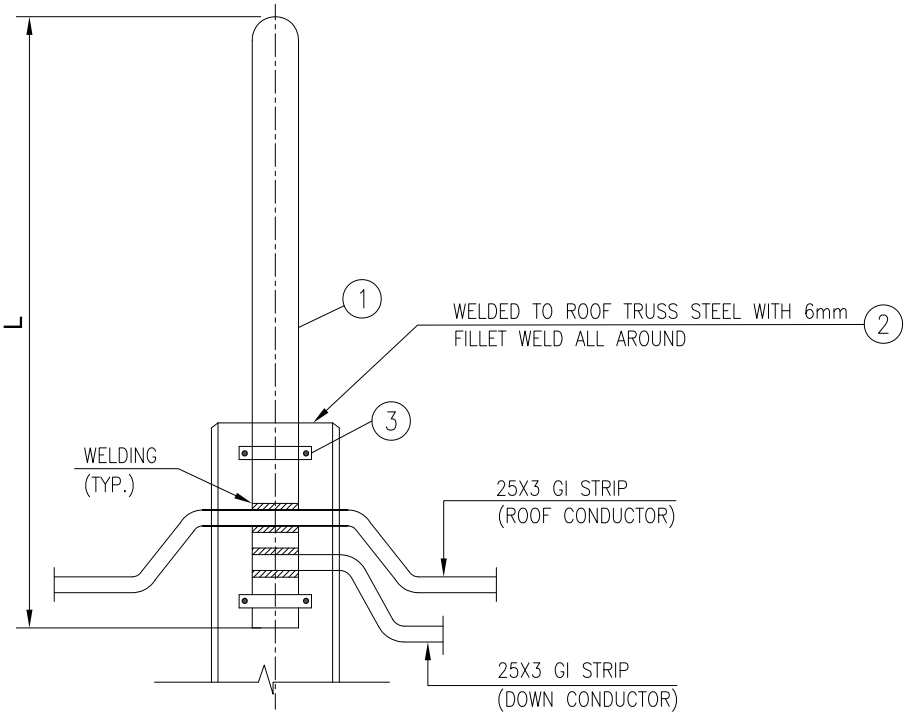

DRAWING NOT TO SCALE

NOTES :-

1) ALL DIMENSIONS ARE IN mm UNLESS OTHERWISE SPECIFIED.
2) ALL WELDED JOINTS SHALL BE PAINTED WITH BITUMINOUS PAINT.
3) ROOF SHALL BE SEALED WITH WEATHER PROOF COMPOUND AFTER INSTALLATION OF AIR TERMINATION ROD.
4) LENGTH OF AIR TERMINATION ROD SHALL BE MAX. 1500mm.

Code	Contract No.	Document ID	Part	Rev.
		PIN-LEP-ELT-4004		00

Rev.	Date	Name (Drawn/Prepared)		Date	Name (Checked)		Date	Name (Approved)		Description	Acc. Code	Cat. Code	Acc. Code	Status
00	02/01/17	KRP	MLD	02/01/17	RPM		02/01/17	RPM		ISSUED AS STANDARD				

BAR-Code

Store Location: Server/Share

Store Location: Folder

Store Name LPR5

Pro. Unit	TON	Group	Type of Document	Sheet
				1 / 1

Con. Unit	Scale	Order No.
	NTS	

thyssenkrupp

	Date	Name
Drawn	02/01/17	KRP
Prepared	02/01/17	MLD
Checked	02/01/17	RPM
Approved	02/01/17	RPM

Description
INSTALLATION STANDARDS – LIGHTNING PROTECTION AIR TERMINATION ROD ON ROOF TRUSS (LPR5)

ISO A4

UH_BO_ISO_A4_P_E_tktSIndia.dwg / AG03_UH_BO_ISO_A4_P.dwg / 14.12.2016

© thyssenkrupp Industrial Solutions (India) Private Limited 2017. All rights reserved

UH_BO_ISO_A4_P_E_tktSIndia.dwg / AG03_UH_BO_ISO_A4_P.dwg / 14.12.2016

ITEM	DESCRIPTION	MATERIAL	QTY.	SUPPLY BY	INSTALLATION BY
1	CROSS CONNECTOR TO FIT ROUND CONDUCTOR UP TO ø10mm / FLAT STRIP UP TO 30X3.5mm WITH 4 HEXAGON HEAD SCREWS.	HDGI	1 NO.	ELECTRICAL CONTRACTOR	ELECTRICAL CONTRACTOR

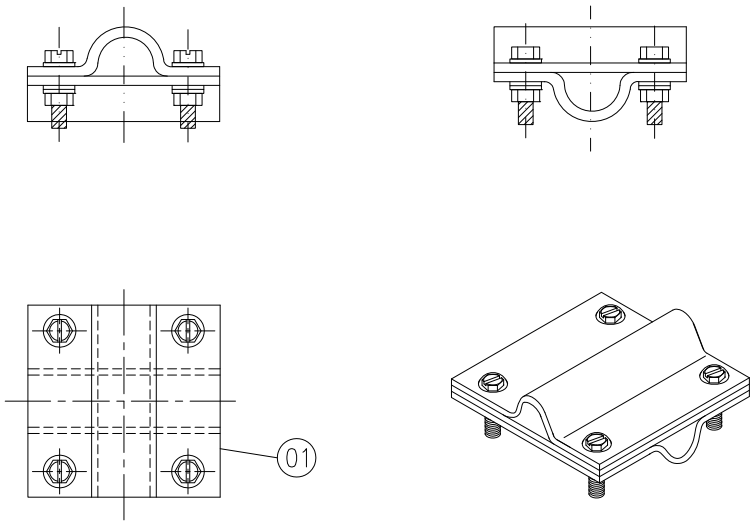

DRAWING NOT TO SCALE

NOTE:

1) ALL DIMENSIONS ARE IN 'mm' UNLESS OTHERWISE SPECIFIED.

Code	Contract No.	Document ID	Part	Rev.
		PIN-LEP-ELT-4004		00

Rev.	Date	Name	Date	Name	Date	Name	Description	Acc. Code	Cat. Code	Acc. Code	Status
00	02/01/17	KRP	02/01/17	RPM	02/01/17	RPM	ISSUED AS STANDARD				
	Drawn/Prepared	MLD	Checked		Approved						

BAR-Code

Store Location: Server/Share

Store Location: Folder

Store Name LPT1

Pro. Unit	TON	Group	Type of Document	Sheet
				1 / 1

Con. Unit	Scale	Order No.
	NTS	

thyssenkrupp

	Date	Name
Drawn	02/01/17	KRP
Prepared	02/01/17	MLD
Checked	02/01/17	RPM
Approved	02/01/17	RPM

Description

INSTALLATION STANDARDS – LIGHTNING PROTECTION CROSS CONNECTOR/ T-CONNECTOR (LPT1)

ISO A4

© thyssenkrupp Industrial Solutions (India) Private Limited 2017. All rights reserved

ITEM	DESCRIPTION	MATERIAL	QTY.	SUPPLY BY	INSTALLATION BY
1	EXPANSION PIECE	HDGI	1 NO.	ELECTRICAL CONTRACTOR	ELECTRICAL CONTRACTOR
2	PARALLEL CONNECTOR SUITABLE FOR ROUND CONDUCTOR UP TO ø10mm	HDGI	2 NOS.	ELECTRICAL CONTRACTOR	ELECTRICAL CONTRACTOR

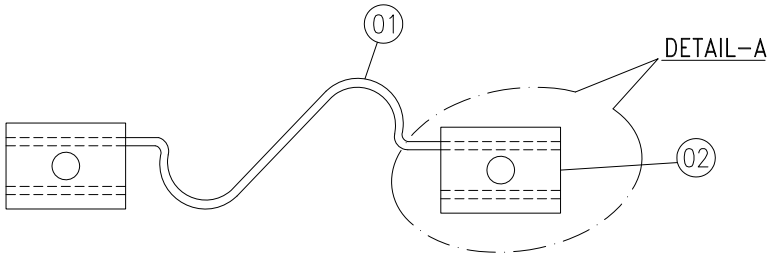

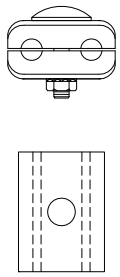

DETAIL-A

DRAWING NOT TO SCALE

NOTE:

1) ALL DIMENSIONS ARE IN 'mm' UNLESS OTHERWISE SPECIFIED.

Code	Contract No.	Document ID	Part	Rev.
		PIN-LEP-ELT-4004		00

Rev.	Date	Name (Drawn/Prepared)		Date	Name (Checked)		Date	Name (Approved)		Description	Acc. Code	Cat. Code	Acc. Code	Status
00	02/01/17	KRP	MLD	02/01/17	RPM		02/01/17	RPM		ISSUED AS STANDARD				

BAR-Code

Store Location: Server/Share

Store Location: Folder

Store Name LPT2

Pro. Unit	TON	Group	Type of Document	Sheet
				1 / 1

Con. Unit	Scale	Order No.
	NTS	

thyssenkrupp

	Date	Name
Drawn	02/01/17	KRP
Prepared	02/01/17	MLD
Checked	02/01/17	RPM
Approved	02/01/17	RPM

Description

INSTALLATION STANDARDS – LIGHTNING PROTECTION CROSS CONNECTOR/ T-CONNECTOR (LPT2)

ISO A4

UH_BO_ISO_A4_P_E_tktSIndia.dwg / AG03_UH_BO_ISO_A4_P.dwg / 14.12.2016

© thyssenkrupp Industrial Solutions (India) Private Limited 2017. All rights reserved

UH_BO_ISO_A4_P_E_tktSIndia.dwg / AG03_UH_BO_ISO_A4_P.dwg / 14.12.2016

ITEM	DESCRIPTION	MATERIAL	QTY.	SUPPLY BY	INSTALLATION BY
1	PARALLEL CONNECTOR SUITABLE FOR ROUND CONDUCTOR UP TO ø10mm	HDGI	1 NO.	ELECTRICAL CONTRACTOR	ELECTRICAL CONTRACTOR

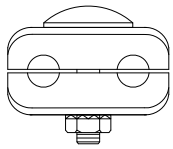

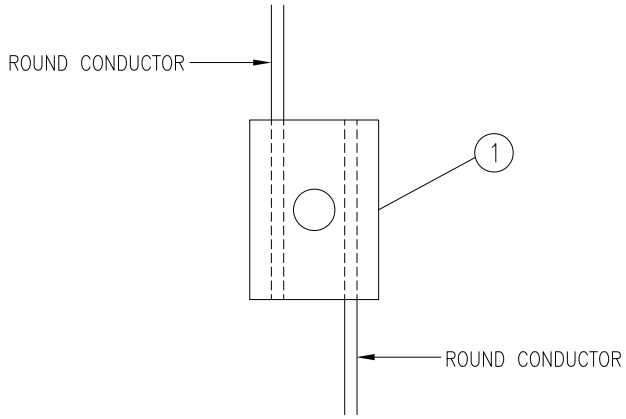

DRAWING NOT TO SCALE

NOTE:

1) ALL DIMENSIONS ARE IN 'mm' UNLESS OTHERWISE SPECIFIED.

Code	Contract No.	Document ID	Part	Rev.
		PIN-LEP-ELT-4004		00

Rev.	Date	Name (Drawn/Prepared)		Date	Name (Checked)		Date	Name (Approved)		Description	Acc. Code	Cat. Code	Acc. Code	Status
00	02/01/17	KRP	MLD	02/01/17	RPM		02/01/17	RPM		ISSUED AS STANDARD				

BAR-Code

Store Location: Server/Share

Store Location: Folder

Store Name LPT3

Pro. Unit	TON	Group	Type of Document	Sheet
				1 / 1

Con. Unit	Scale	Order No.
	NTS	

thyssenkrupp

	Date	Name
Drawn	02/01/17	KRP
Prepared	02/01/17	MLD
Checked	02/01/17	RPM
Approved	02/01/17	RPM

Description

INSTALLATION STANDARDS – LIGHTNING PROTECTION PARALLEL CONNECTOR (LPT3)

ISO A4

© thyssenkrupp Industrial Solutions (India) Private Limited 2017. All rights reserved

We reserve all the rights relating to this technical document © ...2017.tKIS

नालको NALCO नेशनल एल्यूमिनियम कम्पनी लिमिटेड National Aluminium Company Ltd. thyssenkrupp	INSTALLATION STANDARDS - LIGHTNING PROTECTION LIGHTNING PROTECTION SCHEDULE	Code	NAL		
		Contract No.	66-6695		
		Doc.	LSCH		
		Rev. No.	0	Page No.	1 of 1

	Sr. No.	Type of Conductor	Lightning Conductor Size & Type
	1	Roof conductor (Flat surface & corrugated Sheet)	Round, Ø10mm (HDGI) / Flat (Strip), 25x3mm (HDGI)
	2	Down Conductor	Round, Ø10mm (HDGI) / Flat (Strip), 25x3mm (HDGI)
	3	Conductor after test joint towards earthing grid	Round, Ø10mm (HDGI) / Flat (Strip), 25x3mm (HDGI)

INSTALLATION DETAIL- COMMUNCATION AND PUBLIC ADDRESS

LIST OF INSTALLATION STANDARDS

Sr. No.	Description	Typical No.	No. of Sheets	Rev
1	Flashing Beacon on wall/ concrete column	CFBC1	1	00
2	Flashing Beacon on railing	CFBR1	1	00
3	Flashing Beacon on steel structure	CFBS1	1	00
4	Horn type loudspeaker on bracket, on wall/ concrete column	CLSC1	1	00
5	Horn type loudspeaker on wall from side	CLSC2	1	00
6	Box type loudspeaker on wall/ concrete column	CLSC3	1	00
7	Loudspeaker concealed in wall/gypsum board/ on false ceiling	CLSF1	1	00
8	Horn type loudspeaker mounted on self standing Pedestal	CLSP1	1	00
9	Horn type loudspeaker on steel structure	CLSS1	1	00
10	Master Control Station on desk/ control panel frame	CMCS1	1	00
11	Telephone / Field call station on wall/ concrete column	CTFC1	1	00
12	Telephone / Field call station on wall/ concrete column with acoustic hood	CTFC2	1	00
13	Telephone/ Field call station set on railing	CTFR1	1	00
14	Telephone/ Field call station set on railing with acoustic hood	CTFR2	1	00
15	Telephone/ Field call station set on steel strcuture	CTFS1	1	00
16	Telephone/ Field call station set on steel structure with acoustic hood	CTFS2	1	00
17	Telephone set on desk/ table/ brick wall	CTFZ1	1	00

ITEM	DESCRIPTION	MATERIAL	QTY.	SUPPLY BY	INSTALLATION BY
1	FLASHING BEACON	–	1 NO.	CLIENT	ELECTRICAL CONTRACTOR
2	HEXAGONAL HEAD BOLT M6 X 25mm LONG, THREADS UPTO HEAD, WITH NUTS & WASHERS (REFER NOTE–3)	H.D.G.I.	1 SET	ELECTRICAL CONTRACTOR	ELECTRICAL CONTRACTOR
3	ISA 75 (75 x 75 x 6mm)	M.S. PAINTED	AS REQUIRED	(REFER NOTE–3 & 4)	
4	ANCHOR FASTENER M6 x 50mm LONG WITH SUITABLE NUT & WASHER	GALVANISED STEEL / SS	1 SET	ELECTRICAL CONTRACTOR	ELECTRICAL CONTRACTOR

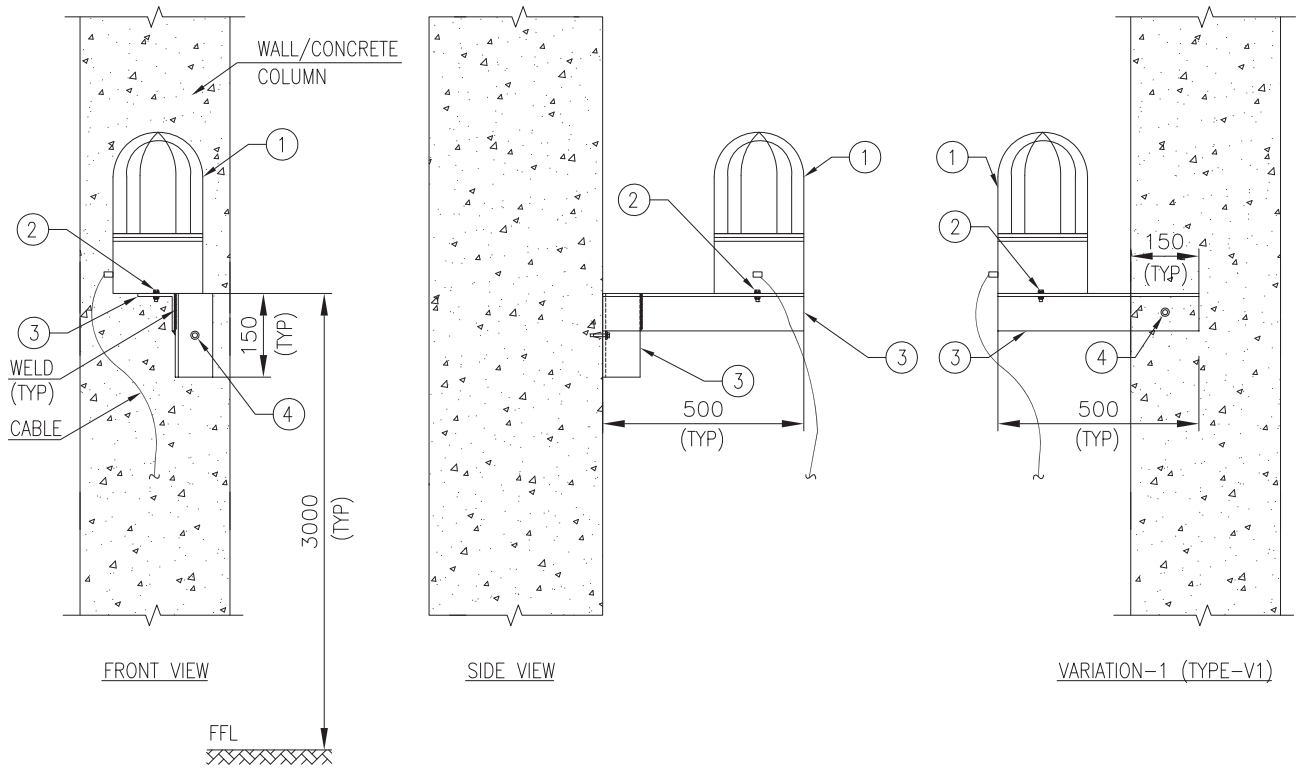

DRAWING NOT TO SCALE

NOTES
1) ALL DIMENSION ARE IN 'mm' UNLESS OTHERWISE SPECIFIED.
2) STEEL SECTIONS SHALL BE PREFABRICATED & PAINTED BEFORE INSTALLATION. AREA AFFECTED DUE TO SITE WELDING SHALL BE CLEANED AND PAINTED.
3) THESE DETAILS SHALL BE VERIFIED WITH ORDERED EQUIPMENT DRAWING.
4) SUPPLY & INSTALLATION OF STEEL IS NOT PART OF THIS INSTALLATION ARRANGEMENT. SAME IS COVERED ELSEWHERE.

Code	Contract No.	Document ID	Part	Rev.
		PIN–LEP–ELT–4010		00

Rev.	Date	Name (Drawn/Prepared)	Date	Name (Checked)	Date	Name (Approved)	Description	Acc. Code	Cat. Code	Acc. Code	Status
00	08.09.2017	KRP	08.09.2017	MLD	08.09.2017	RPM	ISSUED AS STANDARD				

BAR–Code

Store Location: Server/Share
Store Location: Folder
Store Name CFBC1

Pro. Unit	TON	Group	Type of Document	Sheet
				1 / 1

Con. Unit	Scale	Order No.
	NTS	

thyssenkrupp

	Date	Name
Drawn	08.09.2017	KRP
Prepared	08.09.2017	MLD
Checked	08.09.2017	RPM
Approved	08.09.2017	RPM

Description
INSTALLATION STANDARDS–
COMMUNICATION & PA SYSTEM
FLASHING BEACON ON WALL/CONCRETE COLUMN (CFBC1)

ISO A4

UH_BO_ISO_A4_P_E_tktSIndia.dwg / AG03_UH_BO_ISO_A4_P.dwg / 14.12.2016

© thyssenkrupp Industrial Solutions (India) Private Limited 2017. All rights reserved

UH_BO_ISO_A4_P_E_tktSIndia.dwg / AG03_UH_BO_ISO_A4_P.dwg / 14.12.2016

ITEM	DESCRIPTION	MATERIAL	QTY.	SUPPLY BY	INSTALLATION BY
1	FLASHING BEACON	PROJ. SPEC.	1 NO.	CLIENT	ELECTRICAL CONTRACTOR
2	ISMC 75	M.S. PAINTED	AS REQUIRED	REFER NOTE-4	
3	ISA 75 (75 x 75 x 6 mm)	M.S. PAINTED	AS REQUIRED	REFER NOTE-4	
4	25 x 3mm THK. FLAT	M.S. PAINTED	1.2 METER	REFER NOTE-4	
5	U BOLT M10 SIZE THREADED AT THE END SUITABLE FOR HANDRAIL PIPE WITH NUT & WASHERS.	H.D.G.I.	2 SETS	ELECTRICAL CONTRACTOR	ELECTRICAL CONTRACTOR
6	HEXAGONAL HEAD BOLT M10 X 30mm LONG, THREADS UPTO HEAD, WITH SUITABLE NUTS & WASHERS FOR THE CONNECTIONS SHOWN	H.D.G.I.	2 SETS	ELECTRICAL CONTRACTOR	ELECTRICAL CONTRACTOR
7	HEXAGONAL HEAD BOLT M6 X 25mm LONG, THREADS UPTO HEAD, WITH SUITABLE NUTS & WASHERS (REFER NOTE-3)	H.D.G.I.	1 SET	ELECTRICAL CONTRACTOR	ELECTRICAL CONTRACTOR
8	CABLE TIE	PLASTIC	AS REQUIRED	ELECTRICAL CONTRACTOR	ELECTRICAL CONTRACTOR

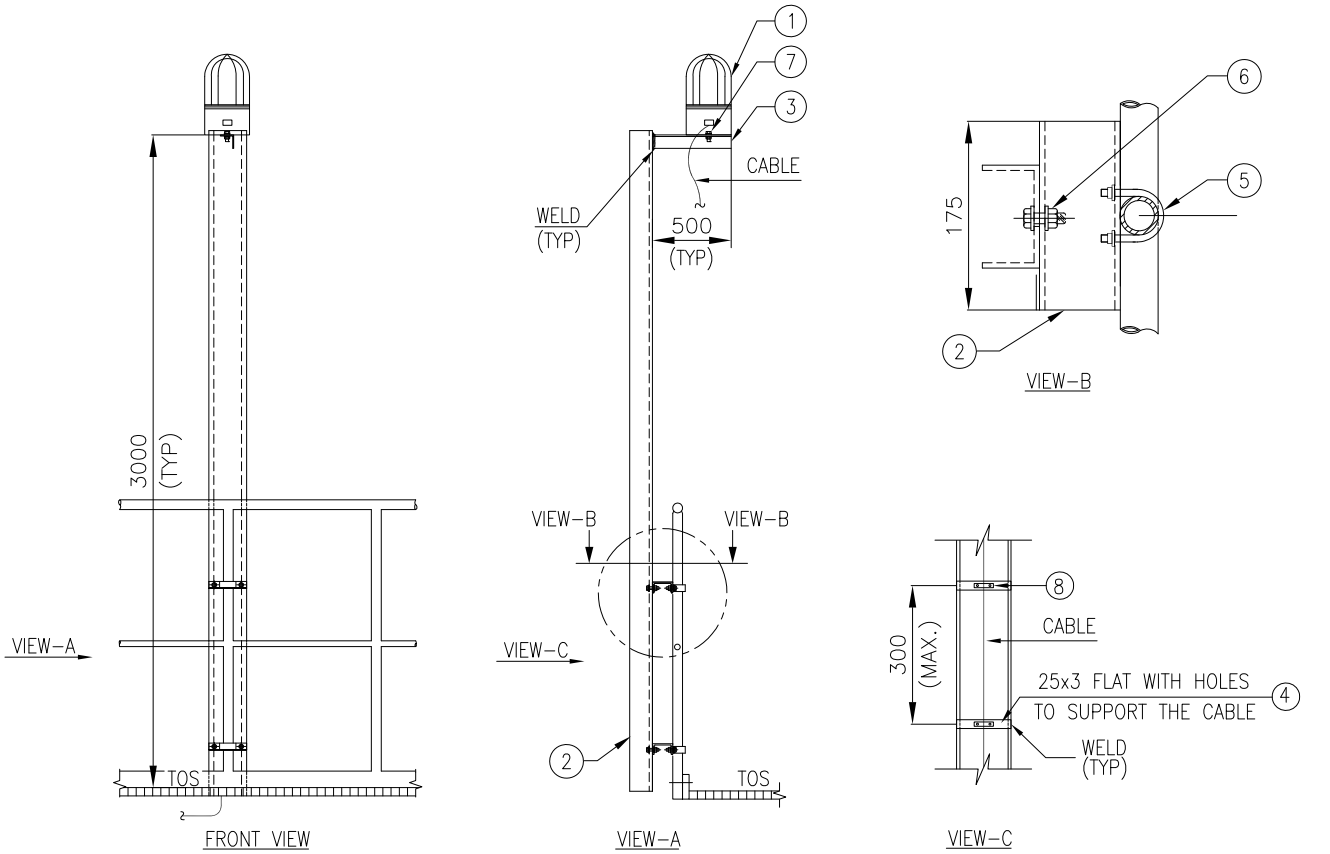

DRAWING NOT TO SCALE

NOTES
1) ALL DIMENSION ARE IN 'mm' UNLESS OTHERWISE SPECIFIED.
2) STEEL SECTIONS SHALL BE PREFABRICATED & PAINTED BEFORE INSTALLATION. AREA AFFECTED DUE TO SITE WELDING SHALL BE CLEANED AND PAINTED.
3) THESE DETAILS SHALL BE VERIFIED WITH ORDERED EQUIPMENT DRAWING.
4) SUPPLY & INSTALLATION OF STEEL IS NOT PART OF THIS INSTALLATION ARRANGEMENT. SAME IS COVERED ELSEWHERE.

Code	Contract No.	Document ID	Part	Rev.
		PIN-LEP-ELT-4010		00

Rev.	Date	Name (Drawn/Prepared)	Date	Name (Checked)	Date	Name (Approved)	Description	Acc. Code	Cat. Code	Acc. Code	Status
00	08.09.2017	KRP	MLD	08.09.2017	RPM	08.09.2017	RPM	ISSUED AS STANDARD			

BAR-Code

Store Location: Server/Share
Store Location: Folder
Store Name CFBR1

Pro. Unit	TON	Group	Type of Document	Sheet
				1 / 1

Con. Unit	Scale	Order No.
	NTS	

thyssenkrupp

	Date	Name
Drawn	08.09.2017	KRP
Prepared	08.09.2017	MLD
Checked	08.09.2017	RPM
Approved	08.09.2017	RPM

Description
INSTALLATION STANDARDS-
COMMUNICATION & PA SYSTEM
FLASHING BEACON ON RAILING
(CFBR1)

ISO A4

© thyssenkrupp Industrial Solutions (India) Private Limited 2017. All rights reserved

UH_BO_ISO_A4_P_E_tktSIndia.dwg / AG03_UH_BO_ISO_A4_P.dwg / 14.12.2016

ITEM	DESCRIPTION	MATERIAL	QTY.	SUPPLY BY	INSTALLATION BY
1	FLASHING BEACON	–	1 NO.	CLIENT	ELECTRICAL CONTRACTOR
2	HEXAGONAL HEAD BOLT M6 X 25mm LONG, THREADS UPTO HEAD, WITH NUTS & WASHERS (REFER NOTE–3)	H.D.G.I.	1 SET	ELECTRICAL CONTRACTOR	ELECTRICAL CONTRACTOR
3	ISA 75 (75 x 75 x 6mm)	M.S. PAINTED	AS REQUIRED	(REFER NOTE–3 & 4)	

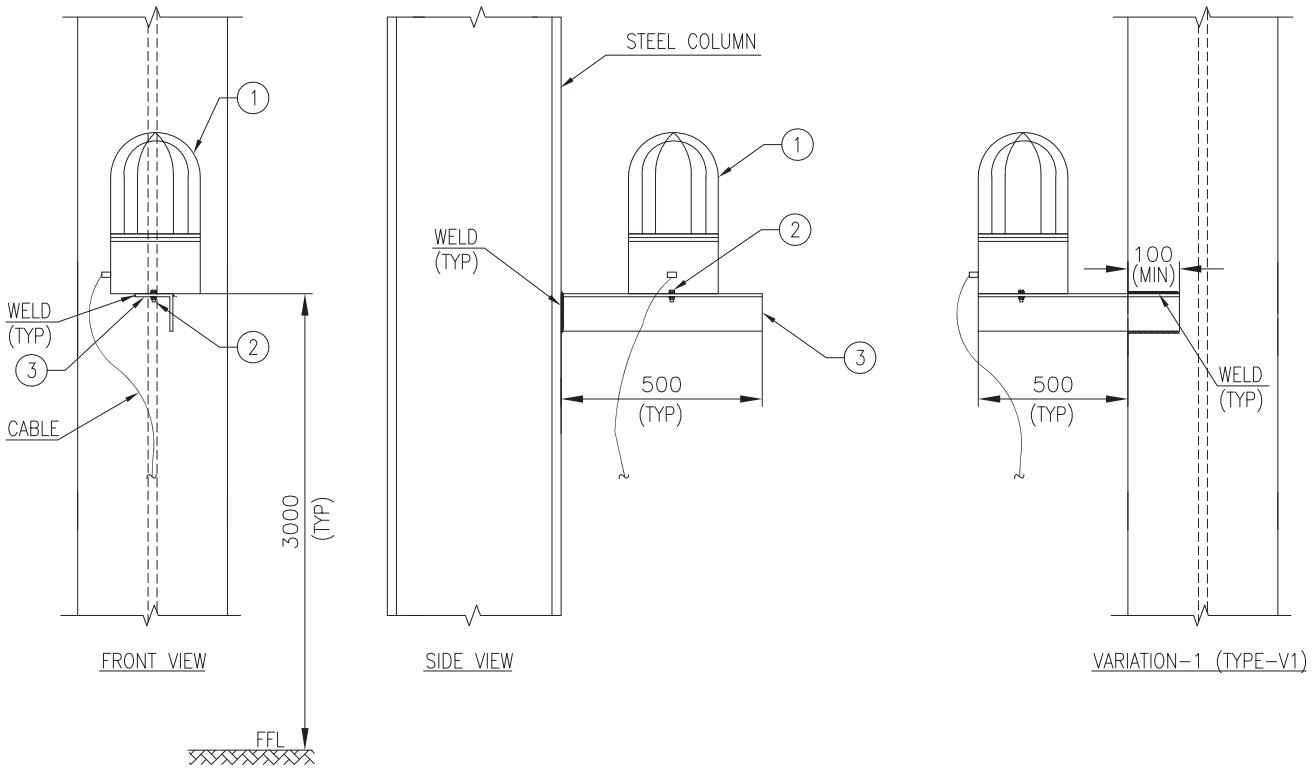

DRAWING NOT TO SCALE

NOTES
1) ALL DIMENSION ARE IN 'mm' UNLESS OTHERWISE SPECIFIED.
2) STEEL SECTIONS SHALL BE PREFABRICATED & PAINTED BEFORE INSTALLATION. AREA AFFECTED DUE TO SITE WELDING SHALL BE CLEANED AND PAINTED.
3) THESE DETAILS SHALL BE VERIFIED WITH ORDERED EQUIPMENT DRAWING.
4) SUPPLY & INSTALLATION OF STEEL IS NOT PART OF THIS INSTALLATION ARRANGEMENT. SAME IS COVERED ELSEWHERE.

Code	Contract No.	Document ID	Part	Rev.
		PIN–LEP–ELT–4010		00

Rev.	Date	Name (Drawn/Prepared)	Date	Name (Checked)	Date	Name (Approved)	Description	Acc. Code	Cat. Code	Acc. Code	Status
00	08.09.2017	KRP / MLD	08.09.2017	RPM	08.09.2017	RPM	ISSUED AS STANDARD				

BAR–Code

Store Location: Server/Share
Store Location: Folder
Store Name CFBS1

Pro. Unit	TON	Group	Type of Document	Sheet
				1 / 1

Con. Unit	Scale	Order No.
	NTS	

thyssenkrupp

	Date	Name
Drawn	08.09.2017	KRP
Prepared	08.09.2017	MLD
Checked	08.09.2017	RPM
Approved	08.09.2017	RPM

Description
INSTALLATION STANDARDS–
COMMUNICATION & PA SYSTEM
FLASHING BEACON ON STEEL STRUCTURE
(CFBS1)

ISO A4

© thyssenkrupp Industrial Solutions (India) Private Limited 2017. All rights reserved

ITEM	DESCRIPTION	MATERIAL	QTY.	SUPPLY BY	INSTALLATION BY
1	HORN TYPE LOUDSPEAKER	–	1 NO.	CLIENT	ELECTRICAL CONTRACTOR
2	HEXAGONAL HEAD BOLT M10 X 30mm LONG THREAD UPTO HEAD, WITH NUTS & WASHERS SUITABLE FOR CONNECTION SHOWN IN THIS DRAWING	H.D.G.I.	1 SET	ELECTRICAL CONTRACTOR	ELECTRICAL CONTRACTOR
3	ISA 75 (75x75x6 mm)	M.S. PAINTED	AS REQUIRED	(REFER NOTE–3 & 4)	
4	ANCHOR FASTENER M6 x 50mm LONG WITH SUITABLE NUT & WASHER	GALVANISED STEEL / SS	2 SETS	ELECTRICAL CONTRACTOR	ELECTRICAL CONTRACTOR
5	100 x 100 x 10 THK. PLATE	M.S. PAINTED	1 NO.	(REFER NOTE–3 & 4)	

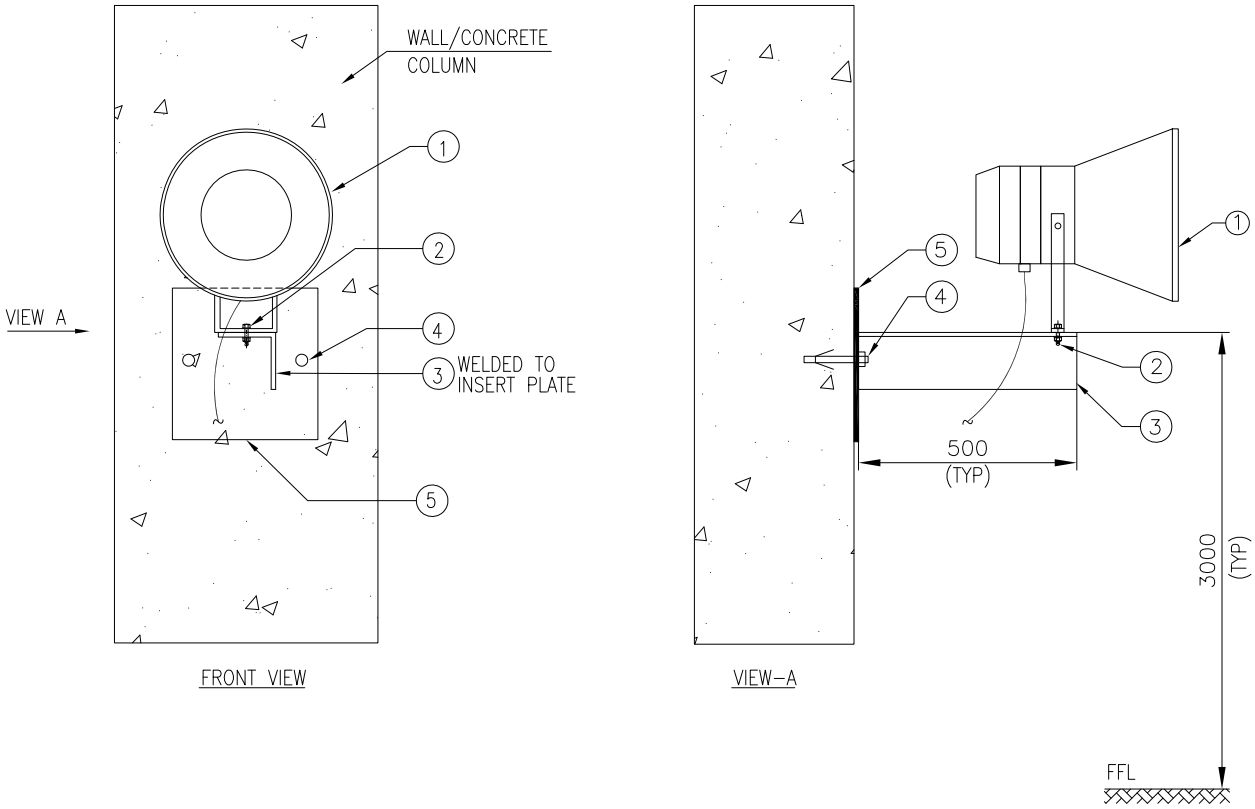

DRAWING NOT TO SCALE

NOTES
1) ALL DIMENSION ARE IN 'mm' UNLESS OTHERWISE SPECIFIED.
2) STEEL SECTIONS SHALL BE PREFABRICATED & PAINTED BEFORE INSTALLATION. AREA AFFECTED DUE TO SITE WELDING SHALL BE CLEANED AND PAINTED.
3) THESE DETAILS SHALL BE VERIFIED WITH ORDERED EQUIPMENT DRAWING.
4) SUPPLY & INSTALLATION OF STEEL IS NOT PART OF THIS INSTALLATION ARRANGEMENT. SAME IS COVERED ELSEWHERE.

Code	Contract No.	Document ID	Part	Rev.
		PIN–LEP–ELT–4010		00

Rev.	Date	Name (Drawn/Prepared)	Date	Name (Checked)	Date	Name (Approved)	Description	Acc. Code	Cat. Code	Acc. Code	Status
00	08.09.2017	KRP	08.09.2017	MLD	08.09.2017	RPM	08.09.2017	RPM	ISSUED AS STANDARD		

BAR–Code

Store Location: Server/Share
Store Location: Folder
Store Name CLSC1

Pro. Unit	TON	Group	Type of Document	Sheet
				1 / 1

Con. Unit	Scale	Order No.
	NTS	

thyssenkrupp

	Date	Name
Drawn	08.09.2017	KRP
Prepared	08.09.2017	MLD
Checked	08.09.2017	RPM
Approved	08.09.2017	RPM

Description
INSTALLATION STANDARDS–
COMMUNICATION & PA SYSTEM
HORN TYPE LOUDSPEAKER ON BRACKET,
ON WALL/CONCRETE COLUMN (CLSC1)

ISO A4

UH_BO_ISO_A4_P_E_tktSIndia.dwg / AG03_UH_BO_ISO_A4_P.dwg / 14.12.2016

© thyssenkrupp Industrial Solutions (India) Private Limited 2017. All rights reserved

ITEM	DESCRIPTION	MATERIAL	QTY.	SUPPLY BY	INSTALLATION BY
1	HORN TYPE LOUDSPEAKER	–	1 NO.	CLIENT	ELECTRICAL CONTRACTOR
2	ISMC 100	M.S. PAINTED	AS REQUIRED	(REFER NOTE–4)	
3	ISA 75 (75x75x6 mm)	M.S. PAINTED	AS REQUIRED	(REFER NOTE–4)	
4	ANCHOR FASTENER M10 x 75mm LONG WITH SUITABLE NUT & WASHER	GALVANISED STEEL / SS	2 SETS	ELECTRICAL CONTRACTOR	ELECTRICAL CONTRACTOR
5	HEXAGONAL HEAD BOLT M10 X 30mm LONG THREAD UPTO HEAD, WITH NUTS & WASHERS (REFER NOTE–3)	H.D.G.I.	1 SET	ELECTRICAL CONTRACTOR	ELECTRICAL CONTRACTOR

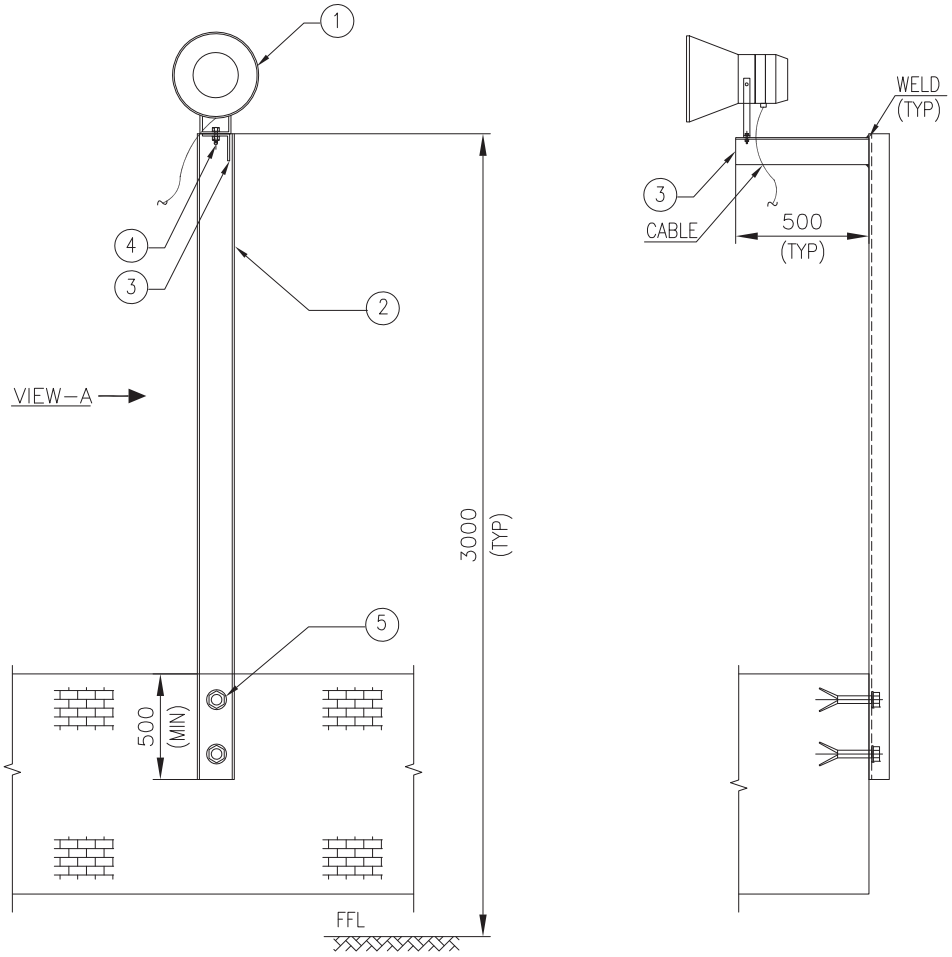

FRONT VIEW

VIEW–A

DRAWING NOT TO SCALE

NOTES
1) ALL DIMENSION ARE IN 'mm' UNLESS OTHERWISE SPECIFIED.
2) STEEL SECTIONS SHALL BE PREFABRICATED & PAINTED BEFORE INSTALLATION. AREA AFFECTED DUE TO SITE WELDING SHALL BE CLEANED AND PAINTED.
3) THESE DETAILS SHALL BE VERIFIED WITH ORDERED EQUIPMENT DRAWING.
4) SUPPLY & INSTALLATION OF STEEL IS NOT PART OF THIS INSTALLATION ARRANGEMENT. SAME IS COVERED ELSEWHERE.

Code	Contract No.	Document ID	Part	Rev.
		PIN–LEP–ELT–4010		00

Rev.	Date	Name (Drawn/Prepared)	Date	Name (Checked)	Date	Name (Approved)	Description	Acc. Code	Cat. Code	Acc. Code	Status
00	08.09.2017	KRP	08.09.2017	MLD	08.09.2017	RPM	ISSUED AS STANDARD				

BAR–Code

Store Location: Server/Share

Store Location: Folder

Store Name CLSC2

Pro. Unit	TON	Group	Type of Document	Sheet
				1 / 1

Con. Unit	Scale	Order No.
	NTS	

thyssenkrupp

	Date	Name
Drawn	08.09.2017	KRP
Prepared	08.09.2017	MLD
Checked	08.09.2017	RPM
Approved	08.09.2017	RPM

Description
INSTALLATION STANDARDS–
COMMUNICATION & PA SYSTEM
HORN TYPE LOUDSPEAKER ON WALL,
FROM SIDE (CLSC2)

ISO A4

UH_BO_ISO_A4_P_E_tktSIndia.dwg / AG03_UH_BO_ISO_A4_P.dwg / 14.12.2016

© thyssenkrupp Industrial Solutions (India) Private Limited 2017. All rights reserved

UH_BO_ISO_A4_P_E_tktSIndia.dwg / AG03_UH_BO_ISO_A4_P.dwg / 14.12.2016

ITEM	DESCRIPTION	MATERIAL	QTY.	SUPPLY BY	INSTALLATION BY
1	BOX TYPE LOUDSPEAKER	–	1 NO.	CLIENT	ELECTRICAL CONTRACTOR
2	ACCESSORIES TO FIX LOUDSPEAKER SUCH AS PLASTIC ANCHORS, M6 HDGI SCREWS (REFER NOTE-2)	–	4 SETS	ELECTRICAL CONTRACTOR	ELECTRICAL CONTRACTOR

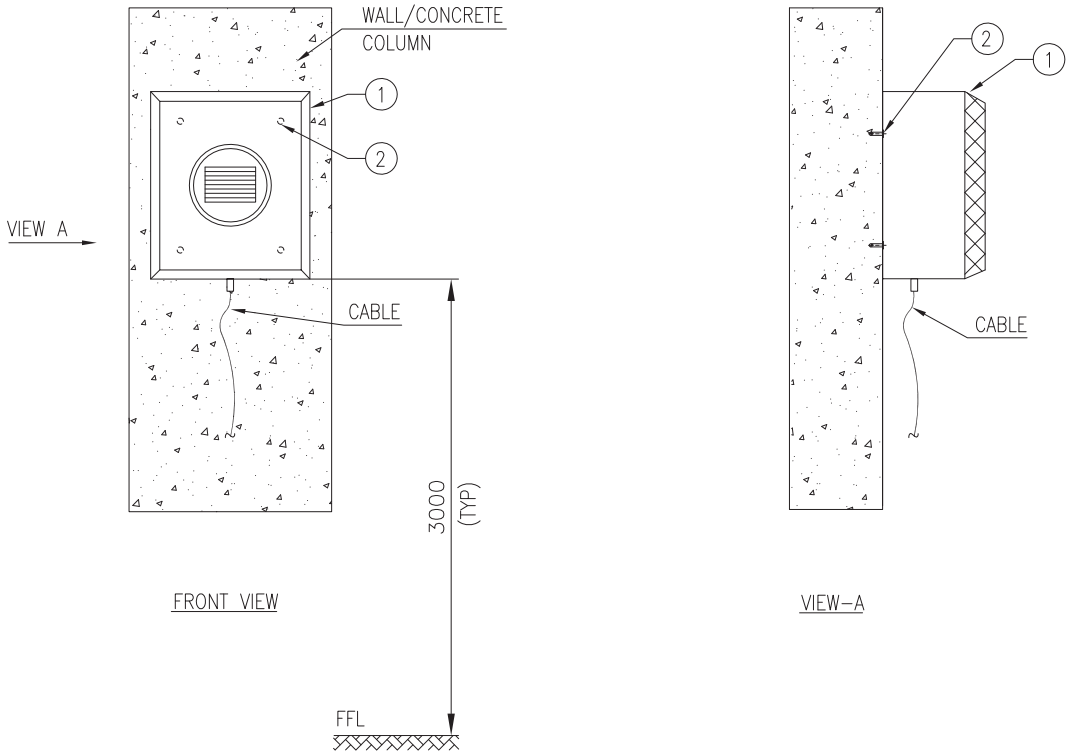

DRAWING NOT TO SCALE

NOTES
1) ALL DIMENSION ARE IN 'mm' UNLESS OTHERWISE SPECIFIED.
2) THESE DETAILS SHALL BE VERIFIED WITH ORDERED EQUIPMENT DRAWING.

Code	Contract No.	Document ID	Part	Rev.
		PIN–LEP–ELT–4010		00

Rev.	Date	Name (Drawn/Prepared)	Date	Name (Checked)	Date	Name (Approved)	Description	Acc. Code	Cat. Code	Acc. Code	Status
00	08.09.2017	KRP	08.09.2017	RPM	08.09.2017	RPM	ISSUED AS STANDARD				

BAR–Code

Store Location: Server/Share
Store Location: Folder
Store Name CLSC3

Pro. Unit	TON	Group	Type of Document	Sheet
				1 / 1

Con. Unit	Scale	Order No.
	NTS	

thyssenkrupp

	Date	Name
Drawn	08.09.2017	KRP
Prepared	08.09.2017	MLD
Checked	08.09.2017	RPM
Approved	08.09.2017	RPM

Description
INSTALLATION STANDARDS–
COMMUNICATION & PA SYSTEM
BOX TYPE LOUDSPEAKER ON WALL/
CONCRETE COLUMN (CLSC3)

ISO A4

© thyssenkrupp Industrial Solutions (India) Private Limited 2017. All rights reserved

UH_BO_ISO_A4_P_E_tktSIndia.dwg / AG03_UH_BO_ISO_A4_P.dwg / 14.12.2016

ITEM	DESCRIPTION	MATERIAL	QTY.	SUPPLY BY	INSTALLATION BY
1	LOUDSPEAKER SUITABLE FOR CONCEALED/FALSE CEILING MOUNTING WITH FIXING CLAMPS/ SPRING MOUNTED CLAMPS (REFER NOTE-2)	–	1 NO.	CLIENT	ELECTRICAL CONTRACTOR

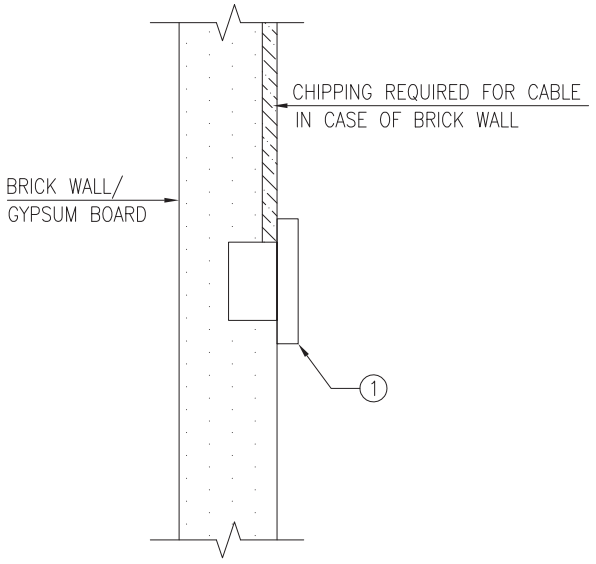

LOUDSPEAKER CONCEALED IN BRICK WALL/GYPSUM BOARD

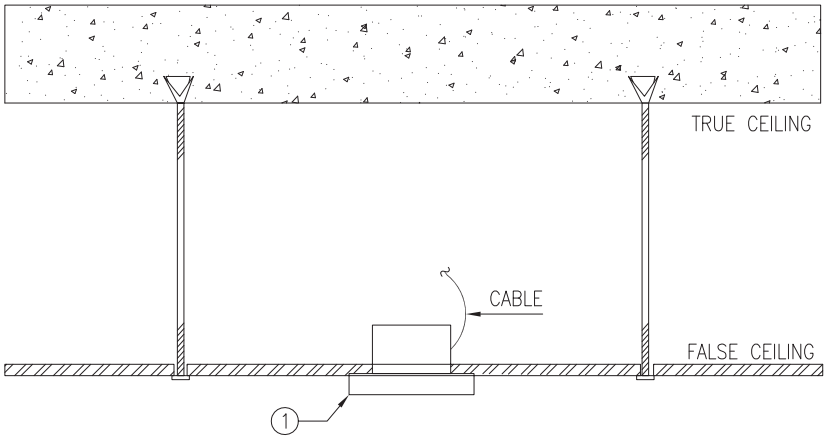

LOUDSPEAKER ON FALSE CEILING

DRAWING NOT TO SCALE

NOTES
1) ALL DIMENSION ARE IN 'mm' UNLESS OTHERWISE SPECIFIED.
2) HARDWARE REQUIRED FOR INSTALLATION OF SPEAKER SHALL BE SUPPLIED & INSTALLED BY ELECTRICAL CONTRACTOR.

Code	Contract No.	Document ID	Part	Rev.
		PIN-LEP-ELT-4010		00

Rev.	Date	Name (Drawn/Prepared)	Date	Name (Checked)	Date	Name (Approved)	Description	Acc. Code	Cat. Code	Acc. Code	Status
00	08.09.2017	KRP	08.09.2017	MLD	08.09.2017	RPM	08.09.2017	RPM	ISSUED AS STANDARD				

BAR-Code

Store Location: Server/Share
Store Location: Folder
Store Name CLSF1

Pro. Unit	TON	Group	Type of Document	Sheet
				1 / 1

Con. Unit	Scale	Order No.
	NTS	

thyssenkrupp

	Date	Name
Drawn	08.09.2017	KRP
Prepared	08.09.2017	MLD
Checked	08.09.2017	RPM
Approved	08.09.2017	RPM

Description
INSTALLATION STANDARDS
COMMUNICATION & PA SYSTEM
LOUDSPEAKER CONCEALED IN WALL/GYPSUM BAORD/ ON FALSE CEILING (CLSF1)

ISO A4

© thyssenkrupp Industrial Solutions (India) Private Limited 2017. All rights reserved

UH_BO_ISO_A4_P_E_tktSIndia.dwg / AG03_UH_BO_ISO_A4_P.dwg / 14.12.2016

ITEM	DESCRIPTION	MATERIAL	QTY.	SUPPLY BY	INSTALLATION BY
1	HORN TYPE LOUDSPEAKER	–	1 NO.	CLIENT	ELECTRICAL CONTRACTOR
2	HEXAGONAL HEAD BOLT M10 X 30mm LONG, THREADS UPTO HEAD, WITH SUITABLE NUTS & WASHERS (REFER NOTE–3)	HDGI	1 SET	ELECTRICAL CONTRACTOR	ELECTRICAL CONTRACTOR
3	ISMC 75	M.S. PAINTED	AS REQUIRED	(REFER NOTE– 4)	
4	ISMC 100	M.S. PAINTED	AS REQUIRED	(REFER NOTE– 4)	
5	M10 x 75 LONG ANCHOR FASTENER WITH SUITABLE NUT & WASHERS	GALVANISED STEEL / SS	4 SETS	ELECTRICAL CONTRACTOR	ELECTRICAL CONTRACTOR
6	150 x 150 x10 THK PLATE	M.S. PAINTED	1 NO.	(REFER NOTE– 4)	
7	200x200x100 (LxWxH)mm PEDESTAL	CONCRETE (GRADE M20)	AS REQUIRED	ELECTRICAL CONTRACTOR	ELECTRICAL CONTRACTOR

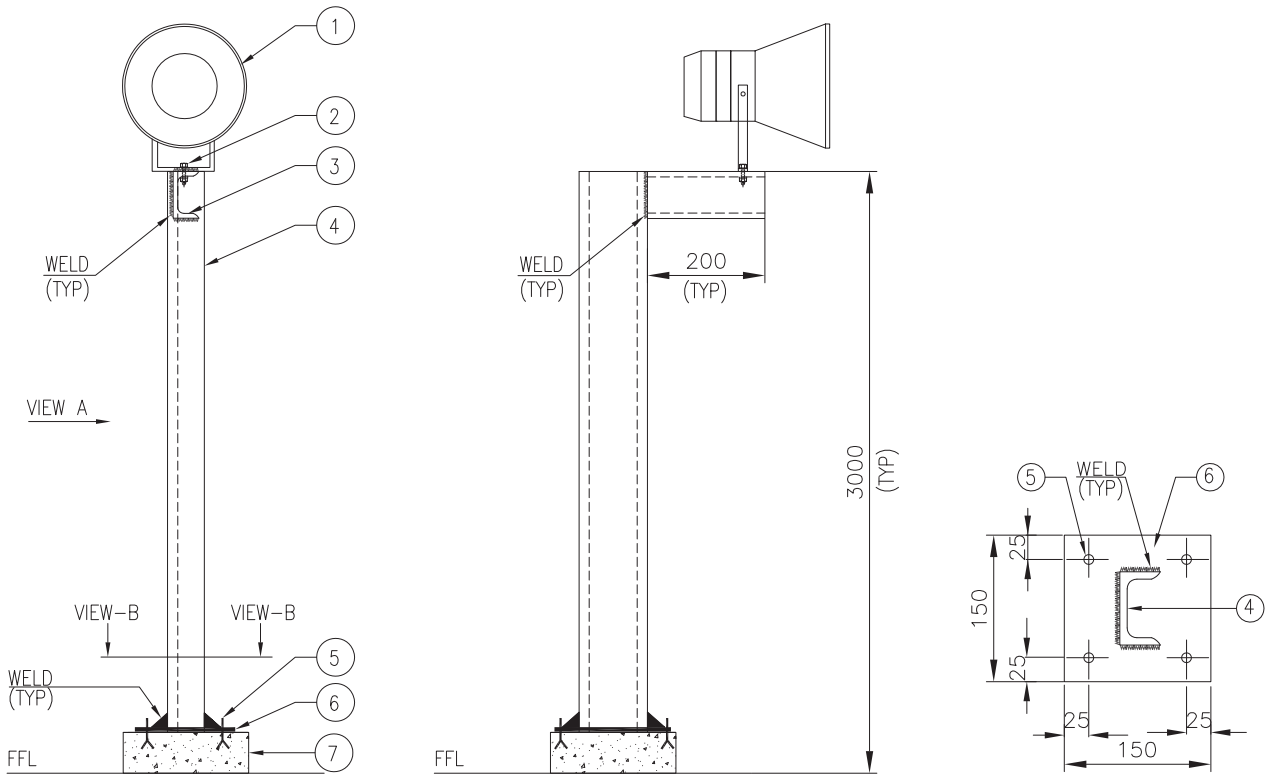

DRAWING NOT TO SCALE

NOTES
1) ALL DIMENSION ARE IN 'mm' UNLESS OTHERWISE SPECIFIED.
2) STEEL SECTIONS SHALL BE PREFABRICATED & PAINTED BEFORE INSTALLATION. AREA AFFECTED DUE TO SITE WELDING SHALL BE CLEANED AND PAINTED.
3) THESE DETAILS SHALL BE VERIFIED WITH ORDERED EQUIPMENT DRAWING.
4) SUPPLY & INSTALLATION OF STEEL IS NOT PART OF THIS INSTALLATION ARRANGEMENT. SAME IS COVERED ELSEWHERE.

Code	Contract No.	Document ID	Part	Rev.
		PIN–LEP–ELT–4010		00

Rev.	Date	Name (Drawn/Prepared)	Date	Name (Checked)	Date	Name (Approved)	Description	Acc. Code	Cat. Code	Acc. Code	Status
00	08.09.2017	KRP	08.09.2017	MLD	08.09.2017	RPM	ISSUED AS STANDARD				

BAR–Code

Store Location: Server/Share

Store Location: Folder

Store Name CLSP1

Pro. Unit	TON	Group	Type of Document	Sheet
				1 / 1

Con. Unit	Scale	Order No.
	NTS	

thyssenkrupp

	Date	Name
Drawn	08.09.2017	KRP
Prepared	08.09.2017	MLD
Checked	08.09.2017	RPM
Approved	08.09.2017	RPM

Description
INSTALLATION STANDARDS–
COMMUNICATION & PA SYSTEM
HORN TYPE LOUDSPEAKER ON
SELF STANDING PEDESTAL (CLSP1)

ISO A4

© thyssenkrupp Industrial Solutions (India) Private Limited 2017. All rights reserved

ITEM	DESCRIPTION	MATERIAL	QTY.	SUPPLY BY	INSTALLATION BY
1	HORN TYPE LOUDSPEAKER	–	1 NO.	CLIENT	ELECTRICAL CONTRACTOR
2	ISMC 75	M.S. PAINTED	AS REQUIRED	(REFER NOTE–3)	
3	HEXAGONAL HEAD BOLT M10 X 30mm LONG THREAD UPTO HEAD, WITH NUTS & WASHERS SUITABLE FOR CONNECTIONS SHOWN IN THIS DRAWING	H.D.G.I.	1 SET	ELECTRICAL CONTRACTOR	ELECTRICAL CONTRACTOR

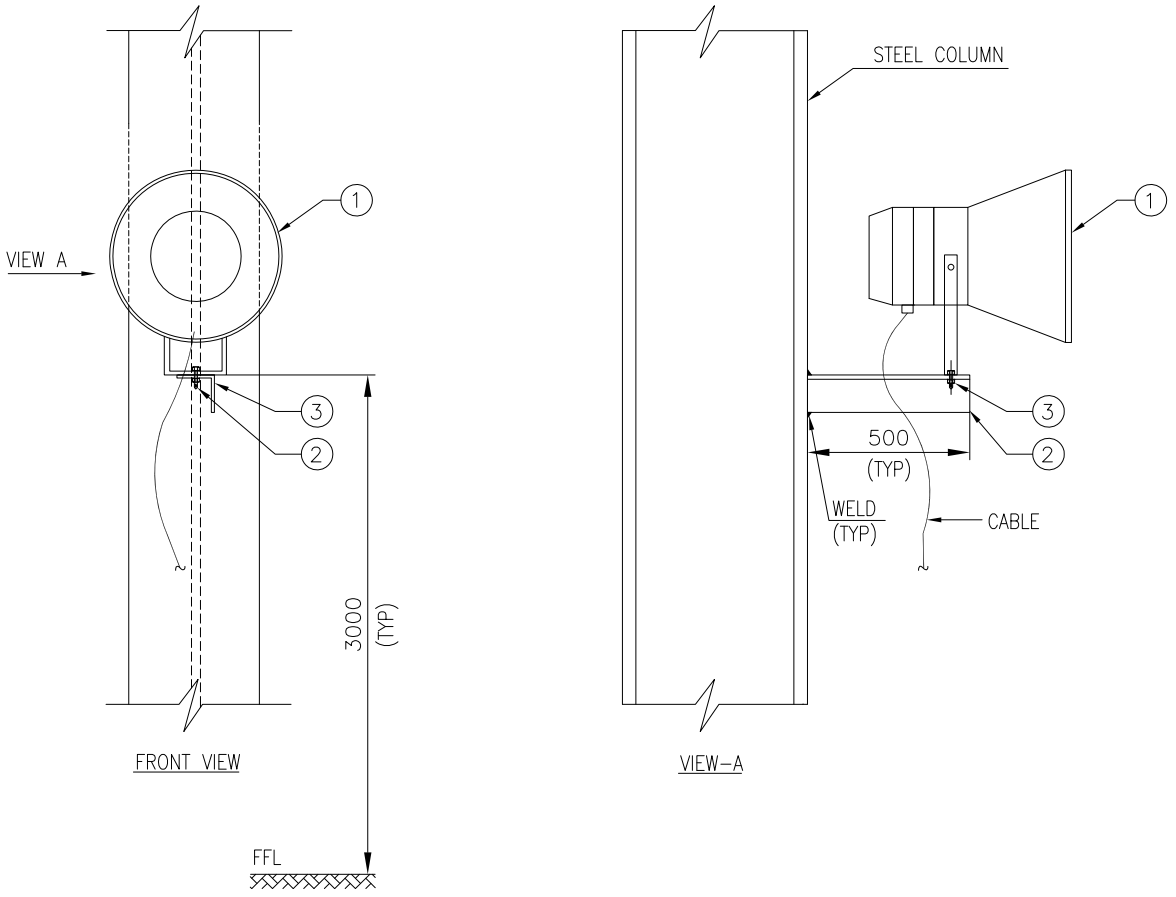

DRAWING NOT TO SCALE

NOTES
1) ALL DIMENSION ARE IN 'mm' UNLESS OTHERWISE SPECIFIED.
2) STEEL SECTIONS SHALL BE PREFABRICATED & PAINTED BEFORE INSTALLATION. AREA AFFECTED DUE TO SITE WELDING SHALL BE CLEANED AND PAINTED.
3) THESE DETAILS SHALL BE VERIFIED WITH ORDERED EQUIPMENT DRAWING.
4) SUPPLY & INSTALLATION OF STEEL IS NOT PART OF THIS INSTALLATION ARRANGEMENT. SAME IS COVERED ELSEWHERE.

Code	Contract No.	Document ID	Part	Rev.
		PIN–LEP–ELT–4010		00

Rev.	Date	Name (Drawn/Prepared)	Date	Name (Checked)	Date	Name (Approved)	Description	Acc. Code	Cat. Code	Acc. Code	Status
00	08.09.2017	KRP	08.09.2017	RPM	08.09.2017	RPM	ISSUED AS STANDARD				

BAR–Code

Store Location: Server/Share
Store Location: Folder
Store Name CLSS1

Pro. Unit	TON	Group	Type of Document	Sheet
				1 / 1

Con. Unit	Scale	Order No.
	NTS	

thyssenkrupp

	Date	Name
Drawn	08.09.2017	KRP
Prepared	08.09.2017	MLD
Checked	08.09.2017	RPM
Approved	08.09.2017	RPM

Description
INSTALLATION STANDARDS–
COMMUNICATION & PA SYSTEM
HORN TYPE LOUDSPEAKER ON STEEL
STRUCTURE (CLSS1)

ISO A4

UH_BO_ISO_A4_P_E_tktSIndia.dwg / AG03_UH_BO_ISO_A4_P.dwg / 14.12.2016

© thyssenkrupp Industrial Solutions (India) Private Limited 2017. All rights reserved

ITEM	DESCRIPTION	MATERIAL	QTY.	SUPPLY BY	INSTALLATION BY
1	MASTER CONTROL STATION WITH CHARACTER DISPLAY, PROGRAMMABLE KEYS, HANDSET, SPEAKER VOLUME CONTROL, DIAL PAD, GOOSE NECK MICROPHONE ETC. SUITABLE FOR DESK/CONTROL PANEL FRAME MOUNTING (REFER NOTE-2 & 3)	–	1 NO.	CLIENT	ELECTRICAL CONTRACTOR

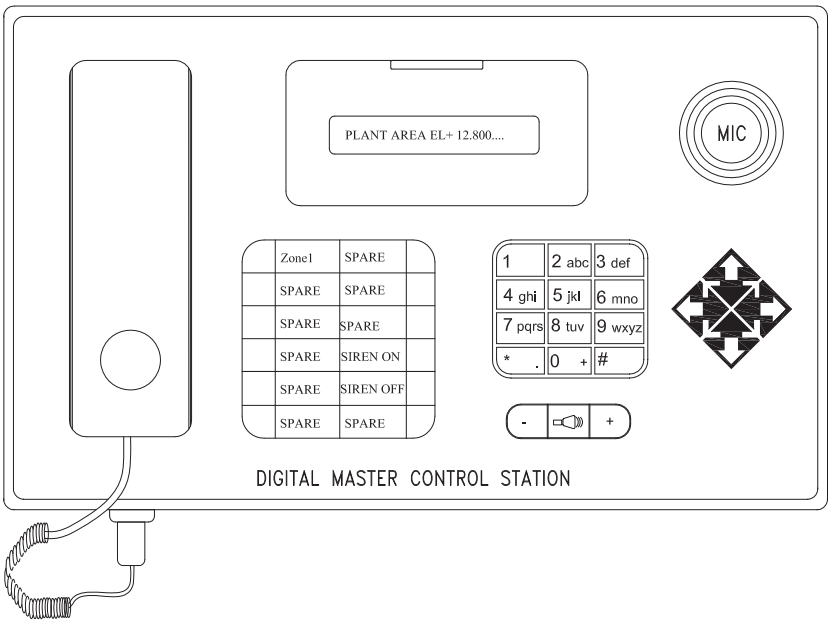

DRAWING NOT TO SCALE

NOTES

1) ALL DIMENSION ARE IN 'mm' UNLESS OTHERWISE SPECIFIED.
2) SKETCH INDICATED IS TYPICAL. EL CONTRACTOR SHALL INSTALL THE DIGITAL MASTER CONTROL STATION (MCS) IN CONSULTATION WITH SITE ENGINEER/VENDOR/CLIENT. DESK MOUNTING/ PANEL FRAME MOUNTING (FLUSHED WITH DESK) SHALL BE DECIDED AT SITE.
3) HARDWARE REQUIRED IF ANY, SUCH AS SCREWS FOR FIXING, RUBBER PAD ETC. SHALL BE SUPPLIED & INSTALLED BY EL CONTRACTOR.

Code	Contract No.	Document ID	Part	Rev.
		PIN-LEP-ELT-4010		00

Rev.	Date	Name (Drawn/Prepared)	Date	Name (Checked)	Date	Name (Approved)	Description	Acc. Code	Cat. Code	Acc. Code	Status
00	08.09.2017	KRP	08.09.2017	MLD	08.09.2017	RPM	08.09.2017	RPM	ISSUED AS STANDARD				

BAR-Code

Store Location: Server/Share

Store Location: Folder

Store Name CMCS1

Pro. Unit	TON	Group	Type of Document	Sheet
				1 / 1

Con. Unit	Scale	Order No.
	NTS	

thyssenkrupp

	Date	Name
Drawn	08.09.2017	KRP
Prepared	08.09.2017	MLD
Checked	08.09.2017	RPM
Approved	08.09.2017	RPM

Description
INSTALLATION STANDARDS-
COMMUNICATION & PA SYSTEM
MASTER CONTROL STATION ON DESK/
CONTROL PANEL FRAME (CMCS1)

ISO A4

UH_BO_ISO_A4_P_E_tktSIndia.dwg / AG03_UH_BO_ISO_A4_P.dwg / 14.12.2016

© thyssenkrupp Industrial Solutions (India) Private Limited 2017. All rights reserved

UH_BO_ISO_A4_P_E_tktSIndia.dwg / AG03_UH_BO_ISO_A4_P.dwg / 14.12.2016

ITEM	DESCRIPTION	MATERIAL	QTY.	SUPPLY BY	INSTALLATION BY
1	TELEPHONE/FIELD CALL STATION	PROJ. SPEC.	1 NO.	CLIENT	ELECTRICAL CONTRACTOR
2	ANCHOR FASTENER M6 x 50mm LONG WITH SUITABLE NUT & WASHER	GALVANISED STEEL / SS	2 SETS	ELECTRICAL CONTRACTOR	ELECTRICAL CONTRACTOR
3	ISMC 75	M.S. PAINTED	AS REQUIRED	(REFER NOTE-3 & 4)	
4	HEXAGONAL HEAD BOLT M10 X 30mm LONG, THREADS UPTO HEAD, WITH SUITABLE NUTS & WASHERS (REFER NOTE-3)	H.D.G.I.	4 SETS	ELECTRICAL CONTRACTOR	ELECTRICAL CONTRACTOR
5	CANOPY COVERED FROM 3 SIDES (REFER NOTE-5)	PROJ SPEC.	1 NO.	ELECTRICAL CONTRACTOR	ELECTRICAL CONTRACTOR
6	HEXAGONAL HEAD BOLT M6 X 25mm LONG, THREADS UPTO HEAD, WITH SUITABLE NUTS & WASHERS (FOR CANOPY FIXING)	H.D.G.I.	4 SETS	ELECTRICAL CONTRACTOR	ELECTRICAL CONTRACTOR

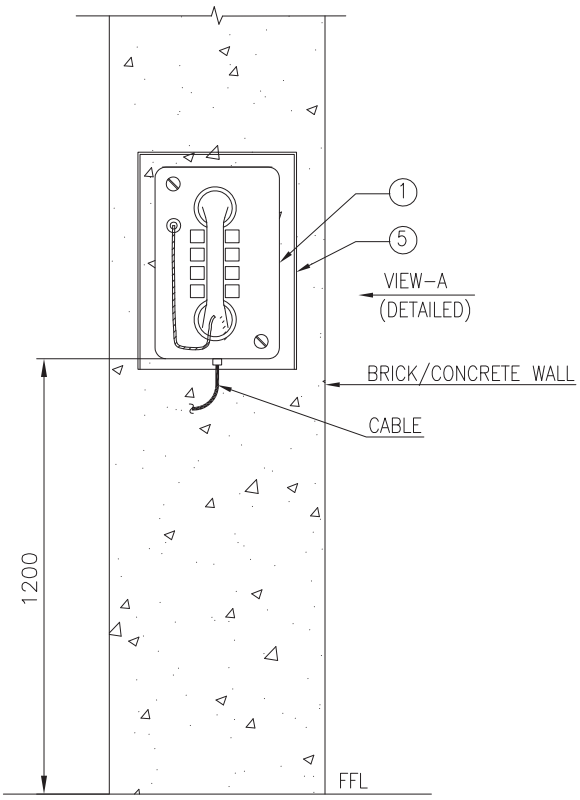

FRONT VIEW

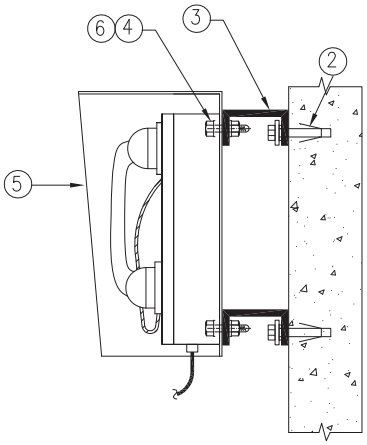

VIEW-A (DETAILED)

DRAWING NOT TO SCALE

NOTES
1) ALL DIMENSION ARE IN 'mm' UNLESS OTHERWISE STATED.
2) STEEL SECTIONS SHALL BE PREFABRICATED & PAINTED BEFORE INSTALLATION.
3) THESE DETAILS SHALL BE VERIFIED WITH ORDERED EQUIPMENT DRAWING.
4) SUPPLY & INSTALLATION OF STEEL IS NOT PART OF THIS INSTALLATION ARRANGEMENT. SAME IS COVERED ELSEWHERE.
5) CANOPY COVERED FROM 3 SIDES SHALL BE PROVIDED FOR TELEPHONE/FIELD CALL STATION INSTALLED OUTDOOR.

Code	Contract No.	Document ID	Part	Rev.
		PIN-LEP-ELT-4010		00

Rev.	Date	Name (Drawn/Prepared)	Date	Name (Checked)	Date	Name (Approved)	Description	Acc. Code	Cat. Code	Acc. Code	Status
00	08.09.2017	KRP	08.09.2017	MLD	08.09.2017	RPM	08.09.2017	RPM	ISSUED AS STANDARD				

BAR-Code

Store Location: Server/Share
Store Location: Folder
Store Name CTFC1

Pro. Unit	TON	Group	Type of Document	Sheet
				1 / 1

Con. Unit	Scale	Order No.
	NTS	

thyssenkrupp

	Date	Name
Drawn	08.09.2017	KRP
Prepared	08.09.2017	MLD
Checked	08.09.2017	RPM
Approved	08.09.2017	RPM

Description
INSTALLATION STANDARDS-
COMMUNICATION & PA SYSTEM
TELEPHONE/FIELD CALL STATION ON WALL/
CONCRETE COLUMN (CTFC1)

ISO A4

© thyssenkrupp Industrial Solutions (India) Private Limited 2017. All rights reserved

ITEM	DESCRIPTION	MATERIAL	QTY.	SUPPLY BY	INSTALLATION BY
1	TELEPHONE/FIELD CALL STATION (FCS) WITH ACOUSTIC HOOD WITH FIXING ARRANGEMENT & HARDWARE REQUIRED FOR FIXING TELEPHONE/FCS ON HOOD	PROJ. SPEC.	1 NO.	CLIENT	ELECTRICAL CONTRACTOR
2	ANCHOR FASTENER M6 x 50mm LONG WITH SUITABLE NUT & WASHER	GALVANISED STEEL / SS	4 SETS	ELECTRICAL CONTRACTOR	ELECTRICAL CONTRACTOR
3	ISMC 75	M.S. PAINTED	AS REQUIRED	(REFER NOTE-3 & 4)	
4	HEXAGONAL HEAD BOLT M10 X 30mm LONG, THREADS UPTO HEAD, WITH SUITABLE NUTS & WASHERS (REFER NOTE-3)	H.D.G.I.	4 SETS	ELECTRICAL CONTRACTOR	ELECTRICAL CONTRACTOR

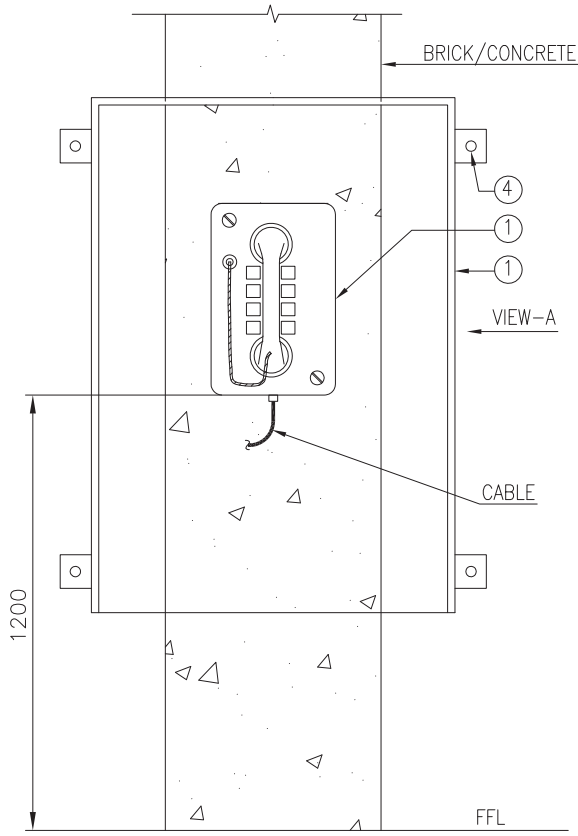

FRONT VIEW

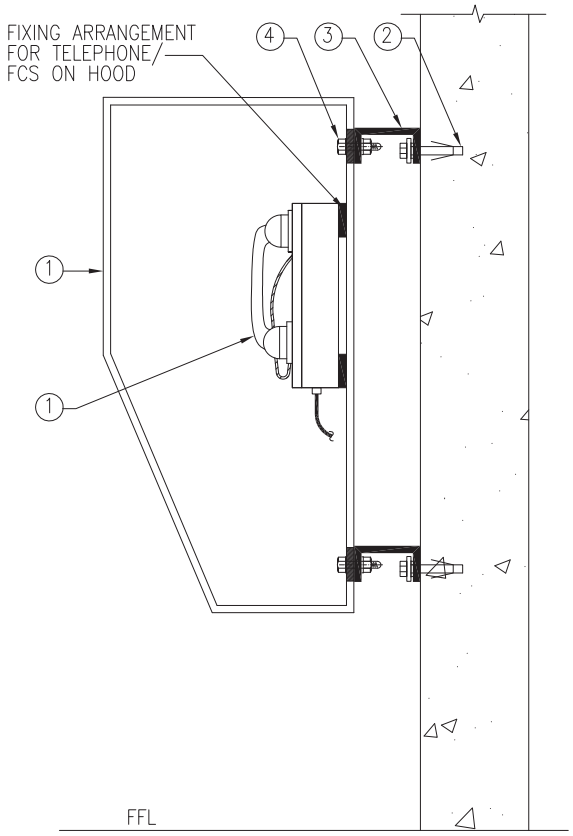

VIEW-A

DRAWING NOT TO SCALE

NOTES
1) ALL DIMENSION ARE IN 'mm' UNLESS OTHERWISE STATED.
2) STEEL SECTIONS SHALL BE PREFABRICATED & PAINTED BEFORE INSTALLATION.
3) THESE DETAILS SHALL BE VERIFIED WITH ORDERED EQUIPMENT DRAWING.
4) SUPPLY & INSTALLATION OF STEEL IS NOT PART OF THIS INSTALLATION ARRANGEMENT. SAME IS COVERED ELSEWHERE.

Code	Contract No.	Document ID	Part	Rev.
		PIN-LEP-ELT-4010		00

Rev.	Date	Name (Drawn/Prepared)	Date	Name (Checked)	Date	Name (Approved)	Description	Acc. Code	Cat. Code	Acc. Code	Status
00	08.09.2017	KRP	MLD	08.09.2017	RPM	08.09.2017	RPM	ISSUED AS STANDARD			

BAR-Code

Store Location: Server/Share
Store Location: Folder
Store Name CTFC2

Pro. Unit	TON	Group	Type of Document	Sheet
				1 / 1

Con. Unit	Scale	Order No.
	NTS	

thyssenkrupp

	Date	Name
Drawn	08.09.2017	KRP
Prepared	08.09.2017	MLD
Checked	08.09.2017	RPM
Approved	08.09.2017	RPM

Description
INSTALLATION STANDARDS-
COMMUNICATION & PA SYSTEM
TELEPHONE/FIELD CALL STATION ON WALL/
CONCRETE COLUMN WITH ACOUSTIC HOOD (CTFC2)

ISO A4

UH_BO_ISO_A4_P_E_tktSIndia.dwg / AG03_UH_BO_ISO_A4_P.dwg / 14.12.2016

© thyssenkrupp Industrial Solutions (India) Private Limited 2017. All rights reserved

ITEM	DESCRIPTION	MATERIAL	QTY.	SUPPLY BY	INSTALLATION BY
1	TELEPHONE/FIELD CALL STATION	PROJ. SPEC.	1 NO.	CLIENT	ELECTRICAL CONTRACTOR
2	ISMC 75	M.S. PAINTED	AS REQUIRED	REFER NOTE-4	
3	25 x 3mm THK. FLAT	M.S. PAINTED	1.0 METER	REFER NOTE-4	
4	U BOLT M10 SIZE THREADED AT THE END SUITABLE FOR HANDRAIL PIPE WITH NUT & WASHERS.	H.D.G.I.	2 SETS	ELECTRICAL CONTRACTOR	ELECTRICAL CONTRACTOR
5	HEXAGONAL HEAD BOLT M10 X 30mm LONG, THREADS UPTO HEAD, WITH SUITABLE NUTS & WASHERS FOR THE CONNECTIONS SHOWN	H.D.G.I.	2 SETS	ELECTRICAL CONTRACTOR	ELECTRICAL CONTRACTOR
6	HEXAGONAL HEAD BOLT M6 X 25mm LONG, THREADS UPTO HEAD, WITH SUITABLE NUTS & WASHERS (REFER NOTE-3)	H.D.G.I.	4 SETS	ELECTRICAL CONTRACTOR	ELECTRICAL CONTRACTOR
7	CABLE TIE	PLASTIC	AS REQUIRED	ELECTRICAL CONTRACTOR	ELECTRICAL CONTRACTOR
8	CANOPY COVERED FROM 3 SIDES (REFER NOTE-5)	PROJ. SPEC.	1 NO.	ELECTRICAL CONTRACTOR	ELECTRICAL CONTRACTOR
9	HEXAGONAL HEAD BOLT M6 X 25mm LONG, THREADS UPTO HEAD, WITH SUITABLE NUTS & WASHERS (FOR CANOPY FIXING)	H.D.G.I.	4 SETS	ELECTRICAL CONTRACTOR	ELECTRICAL CONTRACTOR

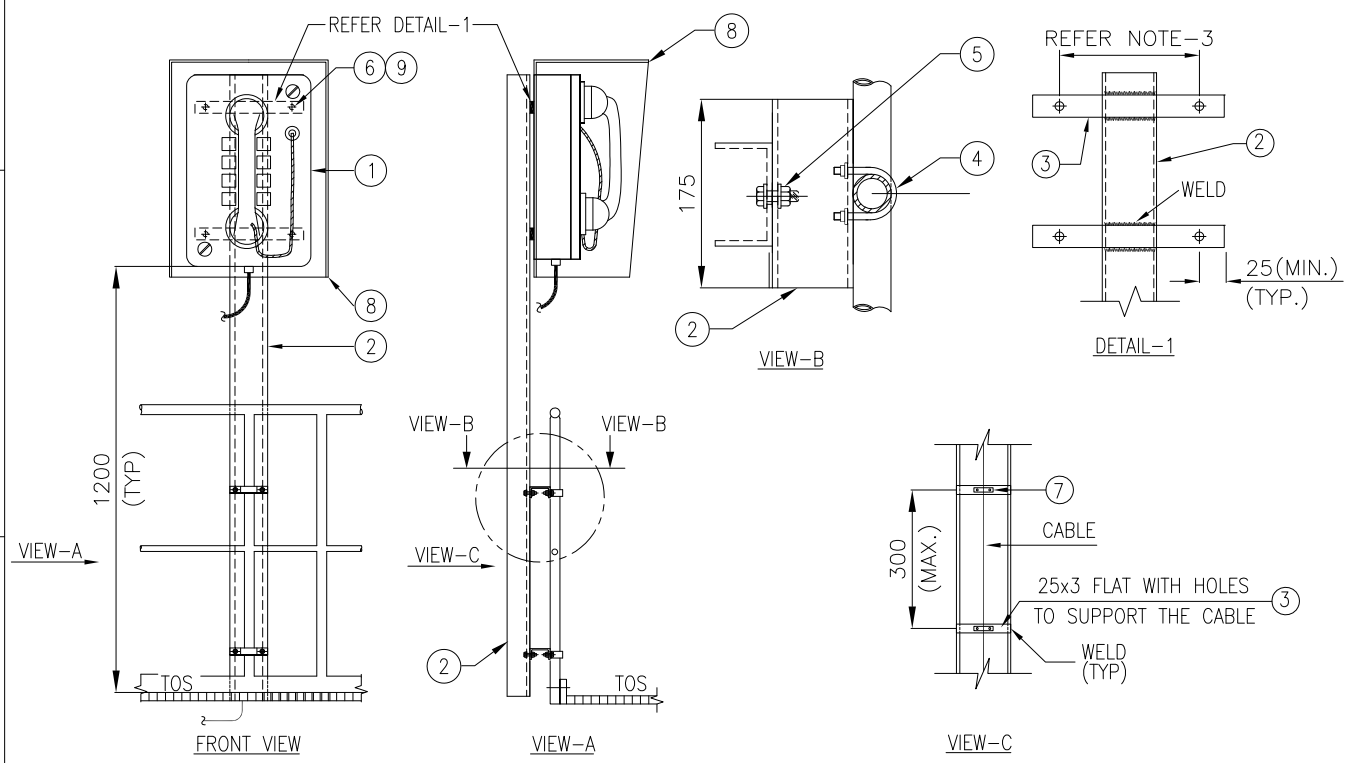

DRAWING NOT TO SCALE

NOTES

1) ALL DIMENSION ARE IN 'mm' UNLESS OTHERWISE SPECIFIED.
2) STEEL SECTIONS SHALL BE PREFABRICATED & PAINTED BEFORE INSTALLATION. AREA AFFECTED DUE TO SITE WELDING SHALL BE CLEANED AND PAINTED.
3) THESE DETAILS SHALL BE VERIFIED WITH ORDERED EQUIPMENT DRAWING.
4) SUPPLY & INSTALLATION OF STEEL IS NOT PART OF THIS INSTALLATION ARRANGEMENT. SAME IS COVERED ELSEWHERE.
5) CANOPY COVERED FROM 3 SIDES SHALL BE PROVIDED FOR TELEPHONE/FIELD CALL STATION INSTALLED OUTDOOR.

Code	Contract No.	Document ID	Part	Rev.
		PIN-LEP-ELT-4010		00

Rev.	Date	Name (Drawn/Prepared)	Date	Name (Checked)	Date	Name (Approved)	Description	Acc. Code	Cat. Code	Acc. Code	Status
00	08.09.2017	KRP	08.09.2017	MLD	08.09.2017	RPM	08.09.2017	RPM	ISSUED AS STANDARD		

BAR-Code

Store Location: Server/Share

Store Location: Folder

Store Name CTFR1

Pro. Unit	TON	Group	Type of Document	Sheet
				1 / 1

Con. Unit	Scale	Order No.
	NTS	

thyssenkrupp

	Date	Name
Drawn	08.09.2017	KRP
Prepared	08.09.2017	MLD
Checked	08.09.2017	RPM
Approved	08.09.2017	RPM

Description
INSTALLATION STANDARDS-
COMMUNICATION & PA SYSTEM
TELEPHONE/ FIELD CALL STATION
ON RAILING (CTFR1)

ISO A4

UH_BO_ISO_A4_P_E_tkSIndia.dwg / AG03_UH_BO_ISO_A4_P.dwg / 14.12.2016

© thyssenkrupp Industrial Solutions (India) Private Limited 2017. All rights reserved

UH_BO_ISO_A4_P_E_tkSIndia.dwg / AG03_UH_BO_ISO_A4_P.dwg / 14.12.2016

ITEM	DESCRIPTION	MATERIAL	QTY.	SUPPLY BY	INSTALLATION BY
1	TELEPHONE/FIELD CALL STATION (FCS) WITH ACOUSTIC HOOD WITH FIXING ARRANGEMENT & HARDWARE REQUIRED FOR FIXING TELEPHONE/FCS ON HOOD	PROJ. SPEC.	1 NO.	CLIENT	ELECTRICAL CONTRACTOR
2	ISMC 75	M.S. PAINTED	AS REQUIRED	REFER NOTE-4	
3	25 x 3mm THK. FLAT	M.S. PAINTED	0.5 METER	REFER NOTE-4	
4	U BOLT M10 SIZE THREADED AT THE END SUITABLE FOR HANDRAIL PIPE WITH NUT & WASHERS.	H.D.G.I.	2 SETS	ELECTRICAL CONTRACTOR	ELECTRICAL CONTRACTOR
5	HEXAGONAL HEAD BOLT M10 X 30mm LONG, THREADS UPTO HEAD, WITH SUITABLE NUTS & WASHERS FOR THE CONNECTIONS SHOWN	H.D.G.I.	6 SETS	ELECTRICAL CONTRACTOR	ELECTRICAL CONTRACTOR
6	HEXAGONAL HEAD BOLT M10 X 30mm LONG, THREADS UPTO HEAD, WITH SUITABLE NUTS & WASHERS (REFER NOTE-3)	H.D.G.I.	4 SETS	ELECTRICAL CONTRACTOR	ELECTRICAL CONTRACTOR
7	CABLE TIE	PLASTIC	AS REQUIRED	ELECTRICAL CONTRACTOR	ELECTRICAL CONTRACTOR

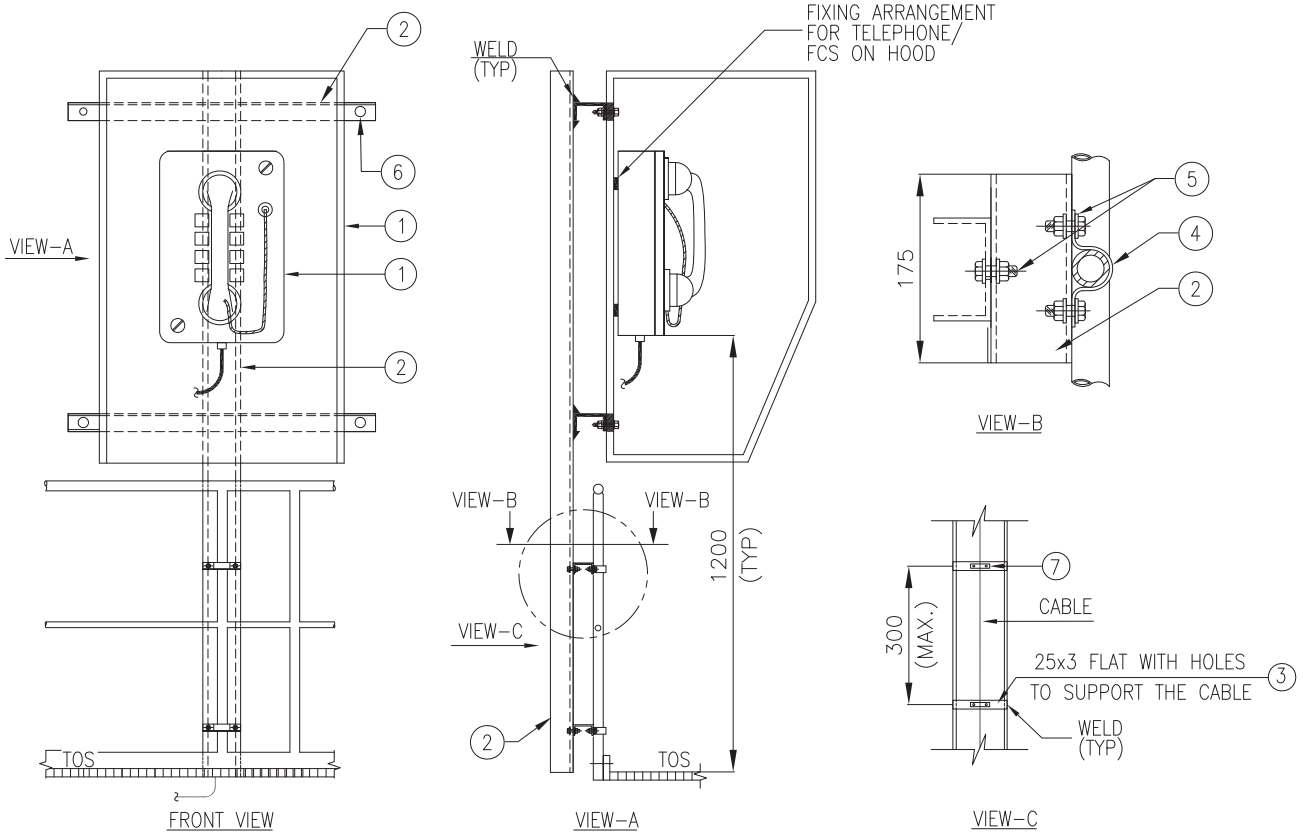

DRAWING NOT TO SCALE

NOTES
1) ALL DIMENSION ARE IN 'mm' UNLESS OTHERWISE SPECIFIED.
2) STEEL SECTIONS SHALL BE PREFABRICATED & PAINTED BEFORE INSTALLATION. AREA AFFECTED DUE TO SITE WELDING SHALL BE CLEANED AND PAINTED.
3) THESE DETAILS SHALL BE VERIFIED WITH ORDERED EQUIPMENT DRAWING.
4) SUPPLY & INSTALLATION OF STEEL IS NOT PART OF THIS INSTALLATION ARRANGEMENT. SAME IS COVERED ELSEWHERE.

Code	Contract No.	Document ID	Part	Rev.
		PIN-LEP-ELT-4010		00

Rev.	Date	Name (Drawn/Prepared)	Date	Name (Checked)	Date	Name (Approved)	Description	Acc. Code	Cat. Code	Acc. Code	Status
00	08.09.2017	KRP	MLD	08.09.2017	RPM	08.09.2017	RPM	ISSUED AS STANDARD			

BAR-Code

Store Location: Server/Share
Store Location: Folder
Store Name CTFR2

Pro. Unit	TON	Group	Type of Document	Sheet
				1 / 1

Con. Unit	Scale	Order No.
	NTS	

thyssenkrupp

	Date	Name
Drawn	08.09.2017	KRP
Prepared	08.09.2017	MLD
Checked	08.09.2017	RPM
Approved	08.09.2017	RPM

Description
INSTALLATION STANDARDS-
COMMUNICATION & PA SYSTEM
TELEPHONE/ FIELD CALL STATION ON
RAILING WITH ACOUSTIC HOOD (CTFR2)

ISO A4

© thyssenkrupp Industrial Solutions (India) Private Limited 2017. All rights reserved

UH_BO_ISO_A4_P_E_tktSIndia.dwg / AG03_UH_BO_ISO_A4_P.dwg / 14.12.2016

ITEM	DESCRIPTION	MATERIAL	QTY.	SUPPLY BY	INSTALLATION BY
1	TELEPHONE/FIELD CALL STATION	PROJ. SPEC.	1 NO.	CLIENT	ELECTRICAL CONTRACTOR
2	ISMC 75	M.S. PAINTED	AS REQUIRED	(REFER NOTE-3 & 4)	
3	HEXAGONAL HEAD BOLT M10 X 30mm LONG, THREADS UPTO HEAD, WITH SUITABLE NUTS & WASHERS (REFER NOTE-3)	H.D.G.I.	4 SETS	ELECTRICAL CONTRACTOR	ELECTRICAL CONTRACTOR
4	CANOPY COVERED FROM 3 SIDES (REFER NOTE-5)	PROJ SPEC.	1 NO.	ELECTRICAL CONTRACTOR	ELECTRICAL CONTRACTOR
5	HEXAGONAL HEAD BOLT M6 X 25mm LONG, THREADS UPTO HEAD, WITH SUITABLE NUTS & WASHERS (FOR CANOPY FIXING)	H.D.G.I.	4 SETS	ELECTRICAL CONTRACTOR	ELECTRICAL CONTRACTOR

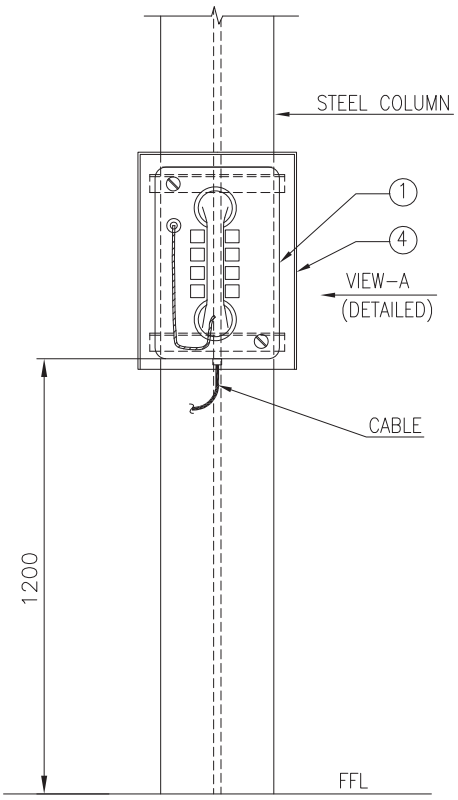

FRONT VIEW

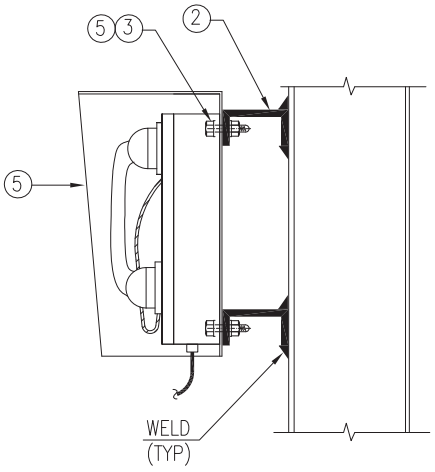

VIEW-A (DETAILED)

DRAWING NOT TO SCALE

NOTES

1) ALL DIMENSION ARE IN 'mm' UNLESS OTHERWISE STATED.
2) STEEL SECTIONS SHALL BE PREFABRICATED & PAINTED BEFORE INSTALLATION. AREA AFFECTED DUE TO SITE WELDING SHALL BE CLEANED AND PAINTED.
3) THESE DETAILS SHALL BE VERIFIED WITH ORDERED EQUIPMENT DRAWING.
4) SUPPLY & INSTALLATION OF STEEL IS NOT PART OF THIS INSTALLATION ARRANGEMENT. SAME IS COVERED ELSEWHERE.
5) CANOPY COVERED FROM 3 SIDES SHALL BE PROVIDED FOR TELEPHONE/FIELD CALL STATION INSTALLED OUTDOOR.

Code	Contract No.	Document ID	Part	Rev.
		PIN-LEP-ELT-4010		00

Rev.	Date	Name (Drawn/Prepared)	Date	Name (Checked)	Date	Name (Approved)	Description	Acc. Code	Cat. Code	Acc. Code	Status
00	08.09.2017	KRP	MLD	08.09.2017	RPM	08.09.2017	RPM	ISSUED AS STANDARD			

BAR-Code

Store Location: Server/Share

Store Location: Folder

Store Name CTFS1

Pro. Unit	TON	Group	Type of Document	Sheet
				1 / 1

Con. Unit	Scale	Order No.
	NTS	

thyssenkrupp

	Date	Name
Drawn	08.09.2017	KRP
Prepared	08.09.2017	MLD
Checked	08.09.2017	RPM
Approved	08.09.2017	RPM

Description
INSTALLATION STANDARDS-
COMMUNICATION & PA SYSTEM
TELEPHONE/FIELD CALL STATION ON
STEEL STRUCTURE (CTFS1)

ISO A4

© thyssenkrupp Industrial Solutions (India) Private Limited 2017. All rights reserved

UH_BO_ISO_A4_P_E_tktSIndia.dwg / AG03_UH_BO_ISO_A4_P.dwg / 14.12.2016

ITEM	DESCRIPTION	MATERIAL	QTY.	SUPPLY BY	INSTALLATION BY
1	TELEPHONE/FIELD CALL STATION (FCS) WITH ACOUSTIC HOOD WITH FIXING ARRANGEMENT & HARDWARE REQUIRED FOR FIXING TELEPHONE/FCS ON HOOD	PROJ. SPEC.	1 NO.	CLIENT	ELECTRICAL CONTRACTOR
2	ISMC 75	M.S. PAINTED	AS REQUIRED	(REFER NOTE-3 & 4)	
3	HEXAGONAL HEAD BOLT M10 X 30mm LONG, THREADS UPTO HEAD, WITH SUITABLE NUTS & WASHERS (REFER NOTE-3)	H.D.G.I.	4 SETS	ELECTRICAL CONTRACTOR	ELECTRICAL CONTRACTOR

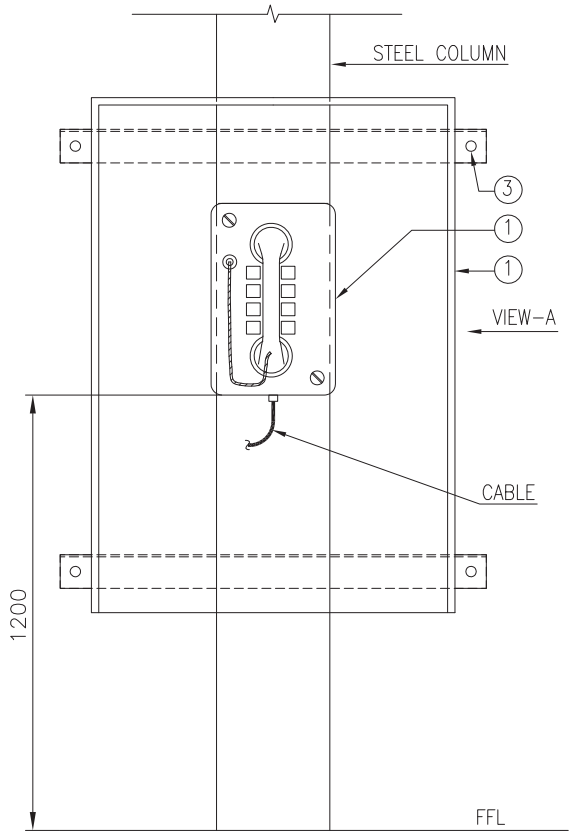

FRONT VIEW

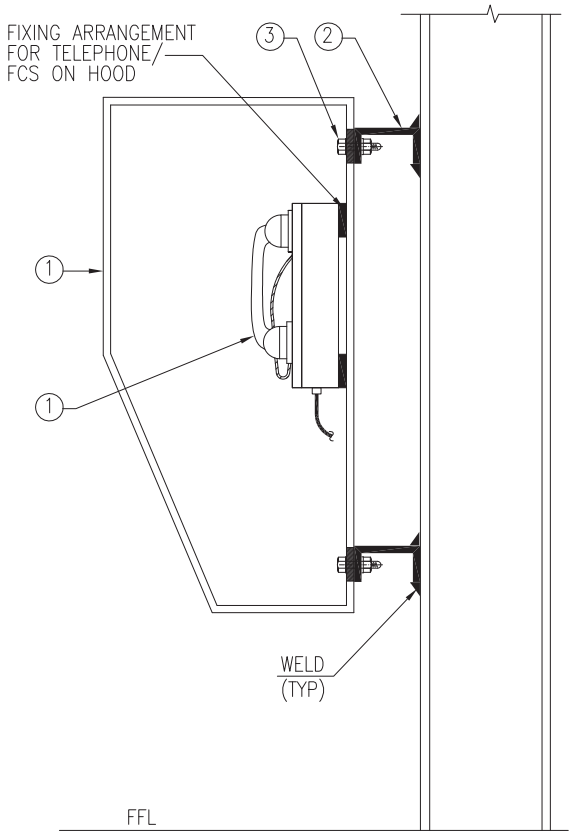

VIEW-A

DRAWING NOT TO SCALE

NOTES

1) ALL DIMENSION ARE IN 'mm' UNLESS OTHERWISE STATED.
2) STEEL SECTIONS SHALL BE PREFABRICATED & PAINTED BEFORE INSTALLATION. AREA AFFECTED DUE TO SITE WELDING SHALL BE CLEANED AND PAINTED.
3) THESE DETAILS SHALL BE VERIFIED WITH ORDERED EQUIPMENT DRAWING.
4) SUPPLY & INSTALLATION OF STEEL IS NOT PART OF THIS INSTALLATION ARRANGEMENT. SAME IS COVERED ELSEWHERE.

Code	Contract No.	Document ID	Part	Rev.
		PIN-LEP-ELT-4010		00

Rev.	Date	Name (Drawn/Prepared)	Date	Name (Checked)	Date	Name (Approved)	Description	Acc. Code	Cat. Code	Acc. Code	Status
00	08.09.2017	KRP	08.09.2017	MLD	08.09.2017	RPM	08.09.2017	RPM	ISSUED AS STANDARD		

BAR-Code

Store Location: Server/Share

Store Location: Folder

Store Name CTFS2

Pro. Unit	TON	Group	Type of Document	Sheet
				1 / 1

Con. Unit	Scale	Order No.
	NTS	

thyssenkrupp

	Date	Name
Drawn	08.09.2017	KRP
Prepared	08.09.2017	MLD
Checked	08.09.2017	RPM
Approved	08.09.2017	RPM

Description
INSTALLATION STANDARDS-
COMMUNICATION & PA SYSTEM
TELEPHONE/FIELD CALL STATION ON STEEL STRUCTURE WITH ACOUSTIC HOOD (CTFS2)

ISO A4

© thyssenkrupp Industrial Solutions (India) Private Limited 2017. All rights reserved

ITEM	DESCRIPTION	MATERIAL	QTY.	SUPPLY BY	INSTALLATION BY
1	STANDARD/VOIP PHONE WITH WALL MOUNTING ADAPTER (REFER NOTE-2 & 3)	-	1 NO.	CLIENT	ELECTRICAL CONTRACTOR

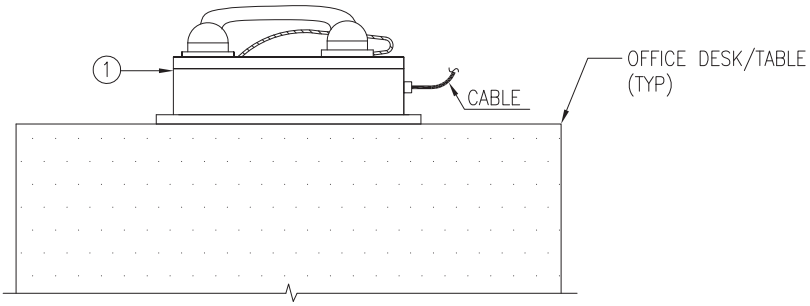

VARIATION-1 (TYPE V1)
(ON DESK/TABLE)

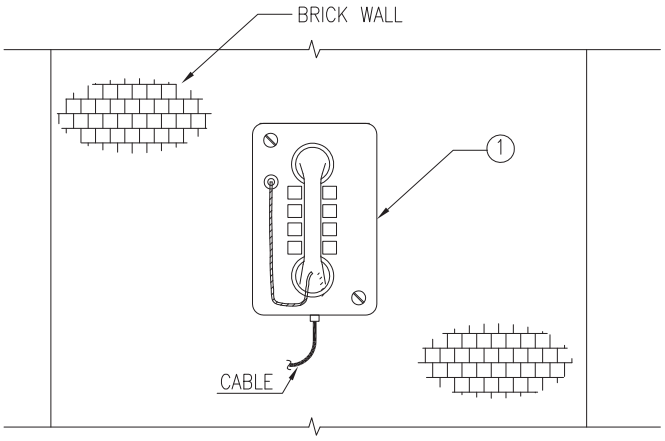

VARIATION-2 (TYPE V2)
(ON BRICK WALL)

DRAWING NOT TO SCALE

NOTES

1) ALL DIMENSION ARE IN 'mm' UNLESS OTHERWISE STATED.
2) SKETCH INDICATED IS TYPICAL. GENERALLY, INSTALLATION IS DESK/TABLE MOUNTED. MOUNTING ON WALL SHALL BE DECIDED AT SITE IN CONSULTATION WITH SITE ENGINEER/CLIENT.
3) HARDWARE REQUIRED FOR BRICK WALL MOUNTING SHALL BE SUPPLIED & INSTALLED BY EL CONTRACTOR.

Code	Contract No.	Document ID	Part	Rev.
		PIN-LEP-ELT-4010		00

Rev.	Date	Name (Drawn/Prepared)	Date	Name (Checked)	Date	Name (Approved)	Description	Acc. Code	Cat. Code	Acc. Code	Status
00	08.09.2017	KRP	08.09.2017	RPM	08.09.2017	RPM	ISSUED AS STANDARD				

BAR-Code

Store Location: Server/Share

Store Location: Folder

Store Name CTFZ1

Pro. Unit	TON	Group	Type of Document	Sheet
				1 / 1

Con. Unit	Scale	Order No.
	NTS	

thyssenkrupp

	Date	Name
Drawn	08.09.2017	KRP
Prepared	08.09.2017	MLD
Checked	08.09.2017	RPM
Approved	08.09.2017	RPM

Description
INSTALLATION STANDARDS-
COMMUNICATION & PA SYSTEM
TELEPHONE SET ON DESK/ TABLE/
BRICK WALL (CTFZ1)

ISO A4

UH_BO_ISO_A4_P_E_tktSIndia.dwg / AG03_UH_BO_ISO_A4_P.dwg / 14.12.2016

© thyssenkrupp Industrial Solutions (India) Private Limited 2017. All rights reserved

INSTALLATION DETAIL- FIRE ALRAM

LIST OF INSTALLATION STANDARDS

Sr. No.	Description	Typical No.	No. of Sheets	Rev
1	Hooter/Sounder on wall/ concrte column	FAHC1	1	00
2	Hooter/Sounder on steel structure	FAHS1	1	00
3	Hooter/Sounder on wall/ concrte column/ false ceiling	FAHZ1	1	00
4	Siren on brick/ concrete wall	FASC1	1	00
5	Siren on concrete column	FASC2	1	00
6	Siren on steel structure	FASS1	1	00
7	Beam Detector on Wall/ Concrete Column : Type 1	FBDC1	1	00
8	Beam Detector on Wall/ Concrete Column : Type 2	FBDC2	1	00
9	Beam Detector on Steel structure	FBDS1	1	00
10	Beam Reflector on wall/ concrete column	FBRC1	1	00
11	Beam Reflector on brick/concrete wall/ gypsum board	FBRC2	1	00
12	Beam Reflector on Steel Structure	FBRS1	1	00
13	Manual Call Point on Wall/ Concrete Column	FCPC1	1	00
14	Manual call point concealed in wall/ gypsum board, direct on wall/ gypsum board	FCPC2	1	00
15	Manual Call Point on Self standing Pedestal	FCPP1	1	00
16	Manual Call Point on Steel platform	FCPP2	1	00
17	Manual Call Point on railing	FCPR1	1	00
18	Manual Call Point on Steel structure	FCPS1	1	00
19	Multi-sensor detector on Concrete Ceiling	FMDC1	1	00
20	Multi-sensor detector on false ceiling	FMDF1	1	00
21	Multi-sensor detector in false floor Type-1	FMDF2	1	00
22	Multi-sensor detector in false floor Type-2	FMDF3	1	00
23	Multi-sensor detector on Steel structure	FMDS1	1	00
24	Response Indicator concealed in wall/ gypsum board	FRIC1	1	00
25	Response Indicator on False Ceiling	FRIF1	1	00
26	Linear heat sensing cable on cable tray	FSCT1	1	00

ITEM	DESCRIPTION	MATERIAL	QTY.	SUPPLY BY	INSTALLATION BY
1	HOOTER/SOUNDER	–	1 NO.	CLIENT	ELECTRICAL CONTRACTOR
2	HEXAGONAL HEAD BOLT M10 X 30mm LONG THREAD UPTO HEAD, WITH NUTS & WASHERS SUITABLE FOR CONNECTION SHOWN IN THIS DRAWING	H.D.G.I.	1 SET	ELECTRICAL CONTRACTOR	ELECTRICAL CONTRACTOR
3	ISA 75 (75x75x6 mm)	M.S. PAINTED	AS REQUIRED	(REFER NOTE–3 & 4)	
4	ANCHOR FASTENER M6 x 50mm LONG WITH SUITABLE NUT & WASHER	GALVANISED STEEL / SS	2 SETS	ELECTRICAL CONTRACTOR	ELECTRICAL CONTRACTOR
5	100 x 100 x 10 THK. PLATE	M.S. PAINTED	1 NO.	(REFER NOTE–3 & 4)	

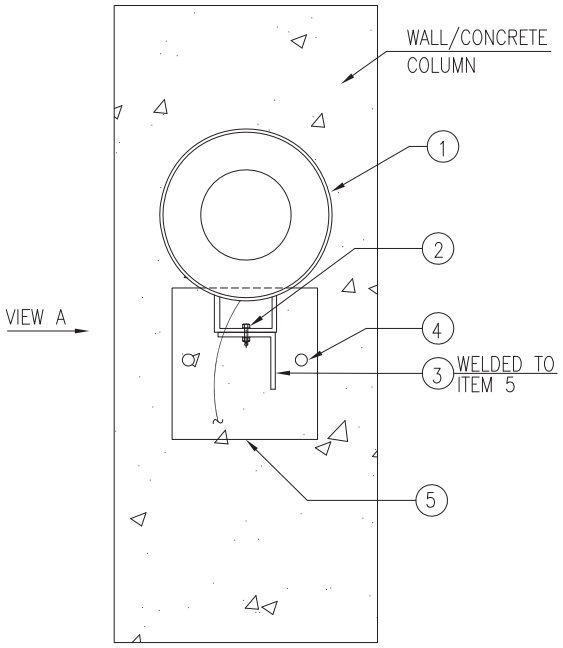

FRONT VIEW

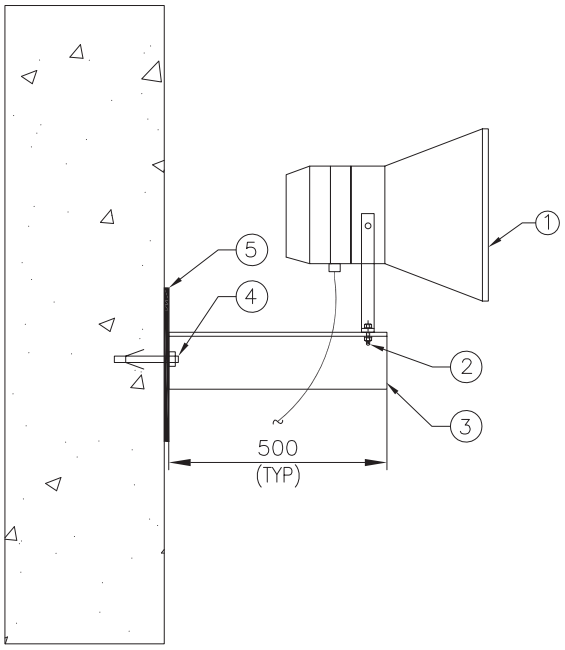

VIEW–A

DRAWING NOT TO SCALE

NOTES
1) ALL DIMENSION ARE IN 'mm' UNLESS OTHERWISE SPECIFIED.
2) STEEL SECTIONS SHALL BE PREFABRICATED & PAINTED BEFORE INSTALLATION. AREA AFFECTED DUE TO SITE WELDING SHALL BE CLEANED AND PAINTED.
3) THESE DETAILS SHALL BE VERIFIED WITH ORDERED EQUIPMENT DRAWING.
4) SUPPLY & INSTALLATION OF STEEL IS NOT PART OF THIS INSTALLATION ARRANGEMENT. SAME IS COVERED ELSEWHERE.

Code	Contract No.	Document ID	Part	Rev.
		PIN–LEP–ELT–4011		00

Rev.	Date	Name (Drawn/Prepared)	Date	Name (Checked)	Date	Name (Approved)	Description	Acc. Code	Cat. Code	Acc. Code	Status
00	15.09.2017	KRP	15.09.2017	MLD	15.09.2017	RPM	ISSUED AS STANDARD				

BAR–Code

Store Location: Server/Share
Store Location: Folder
Store Name FAHC1

Pro. Unit	TON	Group	Type of Document	Sheet
				1 / 1

Con. Unit	Scale	Order No.
	NTS	

thyssenkrupp

	Date	Name
Drawn	15.09.2017	KRP
Prepared	15.09.2017	MLD
Checked	15.09.2017	RPM
Approved	15.09.2017	RPM

Description
INSTALLATION STANDARDS – FIRE ALARM SYSTEM
HOOTER/SOUNDER ON WALL/
CONCRETE COLUMN
(FAHC1)

ISO A4

UH_BO_ISO_A4_P_E_tktSIndia.dwg / AG03_UH_BO_ISO_A4_P.dwg / 14.12.2016

© thyssenkrupp Industrial Solutions (India) Private Limited 2017. All rights reserved

UH_BO_ISO_A4_P_E_tktSIndia.dwg / AG03_UH_BO_ISO_A4_P.dwg / 14.12.2016

ITEM	DESCRIPTION	MATERIAL	QTY.	SUPPLY BY	INSTALLATION BY
1	HOOTER/SOUNDER	–	1 NO.	CLIENT	ELECTRICAL CONTRACTOR
2	ISA 75 (75X75X6mm)	M.S. PAINTED	AS REQUIRED	(REFER NOTE–3)	
3	HEXAGONAL HEAD BOLT M10 X 30mm LONG THREAD UPTO HEAD, WITH NUTS & WASHERS SUITABLE FOR CONNECTIONS SHOWN IN THIS DRAWING	H.D.G.I.	1 SET	ELECTRICAL CONTRACTOR	ELECTRICAL CONTRACTOR

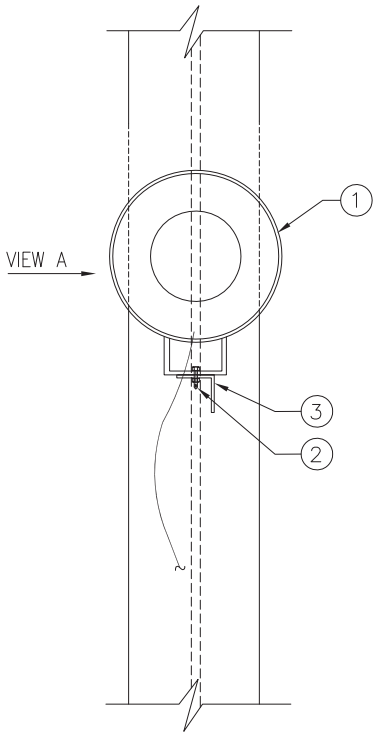

FRONT VIEW

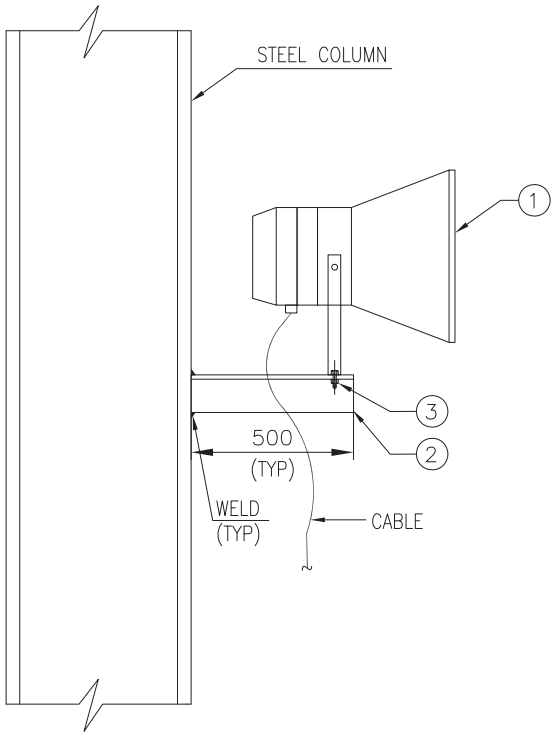

VIEW–A

DRAWING NOT TO SCALE

NOTES
1) ALL DIMENSION ARE IN 'mm' UNLESS OTHERWISE SPECIFIED.
2) STEEL SECTIONS SHALL BE PREFABRICATED & PAINTED BEFORE INSTALLATION. AREA AFFECTED DUE TO SITE WELDING SHALL BE CLEANED AND PAINTED.
3) THESE DETAILS SHALL BE VERIFIED WITH ORDERED EQUIPMENT DRAWING.
4) SUPPLY & INSTALLATION OF STEEL IS NOT PART OF THIS INSTALLATION ARRANGEMENT. SAME IS COVERED ELSEWHERE.

Code	Contract No.	Document ID	Part	Rev.
		PIN–LEP–ELT–4011		00

Rev.	Date	Name (Drawn/Prepared)	Date	Name (Checked)	Date	Name (Approved)	Description	Acc. Code	Cat. Code	Acc. Code	Status
00	15.09.2017	KRP	15.09.2017	MLD	15.09.2017	RPM	ISSUED AS STANDARD				

BAR–Code

Store Location: Server/Share

Store Location: Folder

Store Name FAHS1

Pro. Unit	TON	Group	Type of Document	Sheet
				1 / 1

Con. Unit	Scale	Order No.
	NTS	

thyssenkrupp

	Date	Name
Drawn	15.09.2017	KRP
Prepared	15.09.2017	MLD
Checked	15.09.2017	RPM
Approved	15.09.2017	RPM

Description
INSTALLATION STANDARDS – FIRE ALARM SYSTEM HOOTER/SOUNDER ON STEEL STRUCTURE (FAHS1)

ISO A4

© thyssenkrupp Industrial Solutions (India) Private Limited 2017. All rights reserved

ITEM	DESCRIPTION	MATERIAL	QTY.	SUPPLY BY	INSTALLATION BY
1	HOOTER/SOUNDER	–	1 NO.	CLIENT	ELECTRICAL CONTRACTOR
2	ACCESSORIES TO FIX HOOTER/SOUNDER SUCH AS PLASTIC ANCHORS, M6 HDGI SCREWS ETC. (REFER NOTE–2)	–	4 SETS	ELECTRICAL CONTRACTOR	ELECTRICAL CONTRACTOR

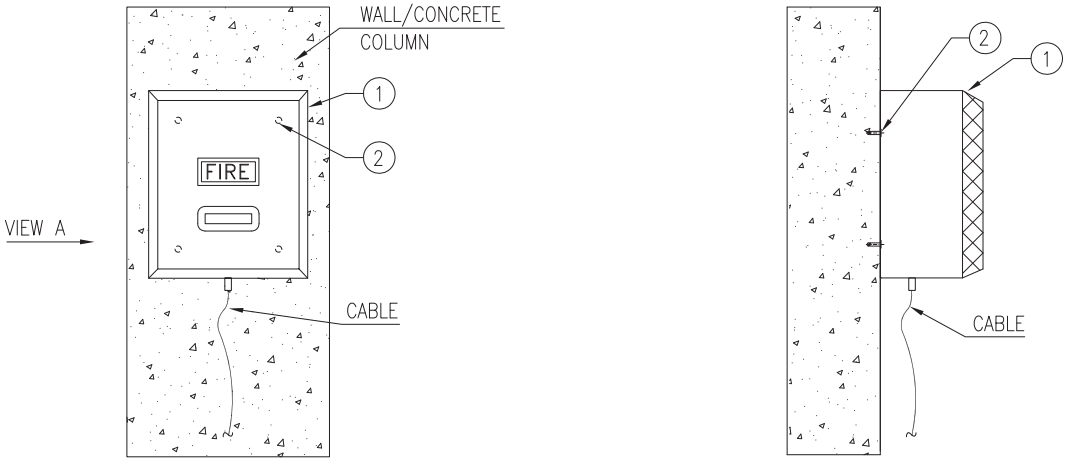

HOOTER/SOUNDER ON WALL/CONCRETE COLUMN
(VARIATION–1 : TYPE V1)

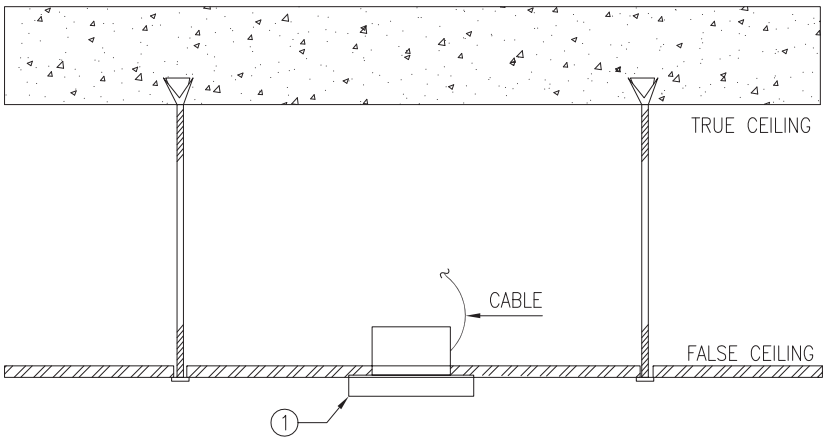

HOOTER/SOUNDER ON FALSE CEILING
(VARIATION–2 : TYPE V2)

DRAWING NOT TO SCALE

NOTES
1) ALL DIMENSION ARE IN 'mm' UNLESS OTHERWISE SPECIFIED.
2) THESE DETAILS SHALL BE VERIFIED WITH ORDERED EQUIPMENT DRAWING.

Code	Contract No.	Document ID	Part	Rev.
		PIN–LEP–ELT–4011		00

Rev.	Date	Name (Drawn/Prepared)		Date	Name (Checked)		Date	Name (Approved)	Description	Acc. Code	Cat. Code	Acc. Code	Status
00	15.09.2017	KRP	MLD	15.09.2017	RPM		15.09.2017	RPM	ISSUED AS STANDARD				

BAR–Code

Store Location: Server/Share
Store Location: Folder
Store Name FAHZ1

Pro. Unit	TON	Group	Type of Document	Sheet
				1 / 1

Con. Unit	Scale	Order No.
	NTS	

thyssenkrupp

	Date	Name
Drawn	15.09.2017	KRP
Prepared	15.09.2017	MLD
Checked	15.09.2017	RPM
Approved	15.09.2017	RPM

Description
INSTALLATION STANDARDS – FIRE ALARM SYSTEM
HOOTER/SOUNDER ON WALL/
CONCRETE COLUMN/ FALSE CEILING
(FAHZ1)

ISO A4

UH_BO_ISO_A4_P_E_tktSIndia.dwg / AG03_UH_BO_ISO_A4_P.dwg / 14.12.2016

© thyssenkrupp Industrial Solutions (India) Private Limited 2017. All rights reserved

ITEM	DESCRIPTION	MATERIAL	QTY.	SUPPLY BY	INSTALLATION BY
1	SIREN	–	1 NO.	CLIENT	ELECTRICAL CONTRACTOR
2	HEXAGONAL HEAD BOLT M10 X 30mm LONG, THREADS UPTO HEAD, WITH SUITABLE NUTS & WASHERS (REFER NOTE–3)	HDGI	4 SETS	ELECTRICAL CONTRACTOR	ELECTRICAL CONTRACTOR
3	ISMC 75	M.S. PAINTED	AS REQUIRED	(REFER NOTE– 4)	
4	M10 x 75 LONG ANCHOR FASTENER WITH SUITABLE NUT & WASHERS	GALVANISED STEEL / SS	4 SETS	ELECTRICAL CONTRACTOR	ELECTRICAL CONTRACTOR
5	150 x 150 x10 THK PLATE	M.S. PAINTED	1 NO.	(REFER NOTE– 4)	
6	250 x 250 x10 THK PLATE	M.S. PAINTED	1 NO.	(REFER NOTE– 3 & 4)	

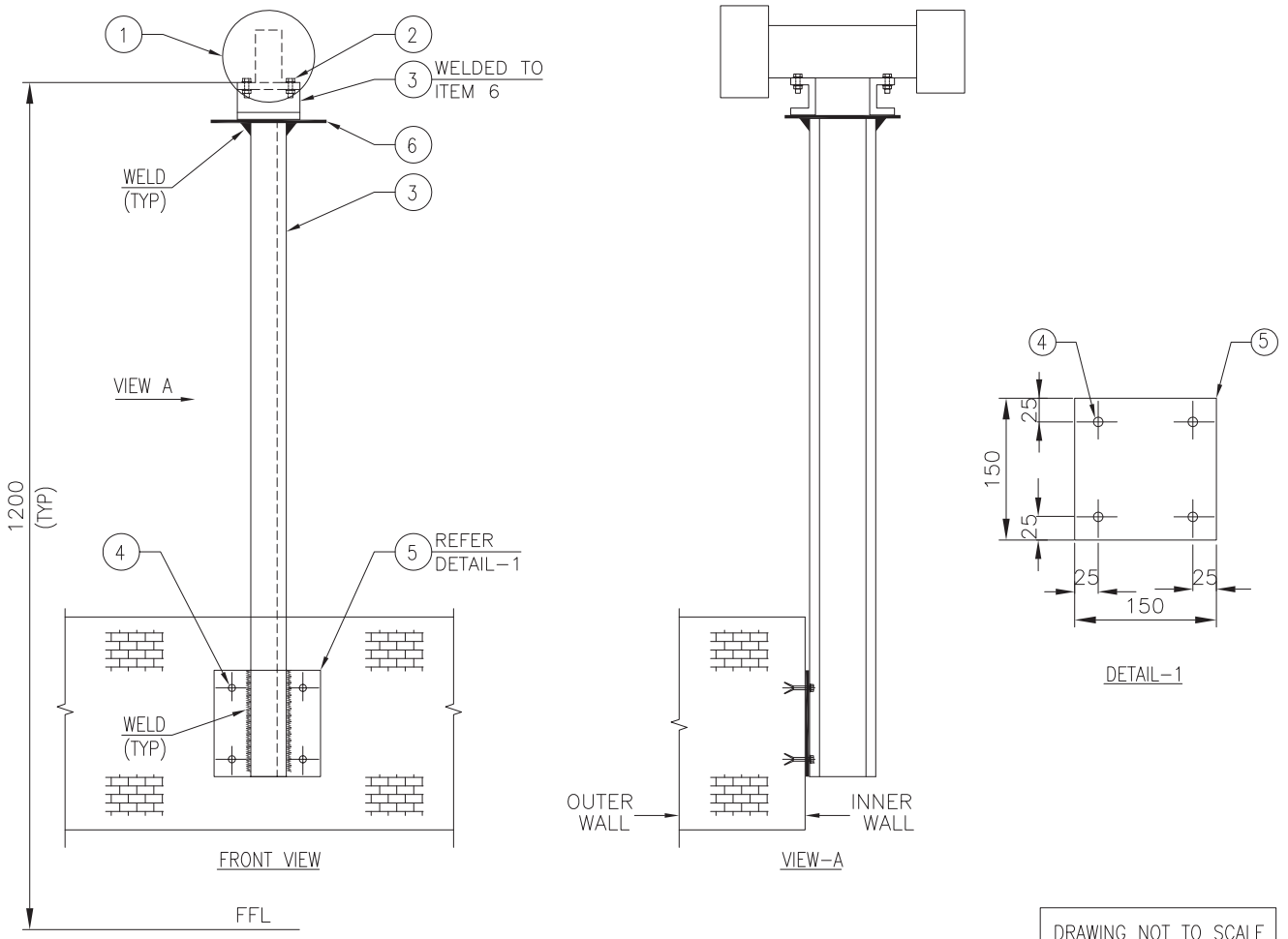

DRAWING NOT TO SCALE

NOTES
1) ALL DIMENSION ARE IN 'mm' UNLESS OTHERWISE SPECIFIED.
2) STEEL SECTIONS SHALL BE PREFABRICATED & PAINTED BEFORE INSTALLATION. AREA AFFECTED DUE TO SITE WELDING SHALL BE CLEANED AND PAINTED.
3) THESE DETAILS SHALL BE VERIFIED WITH ORDERED EQUIPMENT DRAWING.
4) SUPPLY & INSTALLATION OF STEEL IS NOT PART OF THIS INSTALLATION ARRANGEMENT. SAME IS COVERED ELSEWHERE.

Code	Contract No.	Document ID	Part	Rev.
		PIN–LEP–ELT–4011		00

Rev.	Date	Name (Drawn/Prepared)	Date	Name (Checked)	Date	Name (Approved)	Description	Acc. Code	Cat. Code	Acc. Code	Status
00	15.09.2017	KRP	MLD	15.09.2017	RPM	15.09.2017	RPM	ISSUED AS STANDARD			

BAR–Code

Store Location: Server/Share
Store Location: Folder
Store Name FASC1

Pro. Unit	TON	Group	Type of Document	Sheet
				1 / 1

Con. Unit	Scale	Order No.
	NTS	

thyssenkrupp

	Date	Name
Drawn	15.09.2017	KRP
Prepared	15.09.2017	MLD
Checked	15.09.2017	RPM
Approved	15.09.2017	RPM

Description
INSTALLATION STANDARDS – FIRE ALARM SYSTEM SIREN ON BRICK/CONCRETE WALL (FASC1)

ISO A4

UH_BO_ISO_A4_P_E_tktSIndia.dwg / AG03_UH_BO_ISO_A4_P.dwg / 14.12.2016

© thyssenkrupp Industrial Solutions (India) Private Limited 2017. All rights reserved

UH_BO_ISO_A4_P_E_tktSIndia.dwg / AG03_UH_BO_ISO_A4_P.dwg / 14.12.2016

ITEM	DESCRIPTION	MATERIAL	QTY.	SUPPLY BY	INSTALLATION BY
1	SIREN	–	1 NO.	CLIENT	ELECTRICAL CONTRACTOR
2	HEXAGONAL HEAD BOLT M10 X 30mm LONG, THREADS UPTO HEAD, WITH SUITABLE NUTS & WASHERS (REFER NOTE–3)	HDGI	4 SETS	ELECTRICAL CONTRACTOR	ELECTRICAL CONTRACTOR
3	ISMC 75	M.S. PAINTED	AS REQUIRED	(REFER NOTE– 4)	
4	250 x 250 x10 THK PLATE	M.S. PAINTED	1 NO.	(REFER NOTE– 3 & 4)	
5	150 x 150 x10 THK PLATE	M.S. PAINTED	1 NO.	(REFER NOTE– 4)	
6	ISMC 100	M.S. PAINTED	AS REQUIRED	(REFER NOTE– 4)	
7	M10 x 75 LONG ANCHOR FASTENER WITH SUITABLE NUT & WASHERS	GALVANISED STEEL / SS	4 SETS	ELECTRICAL CONTRACTOR	ELECTRICAL CONTRACTOR

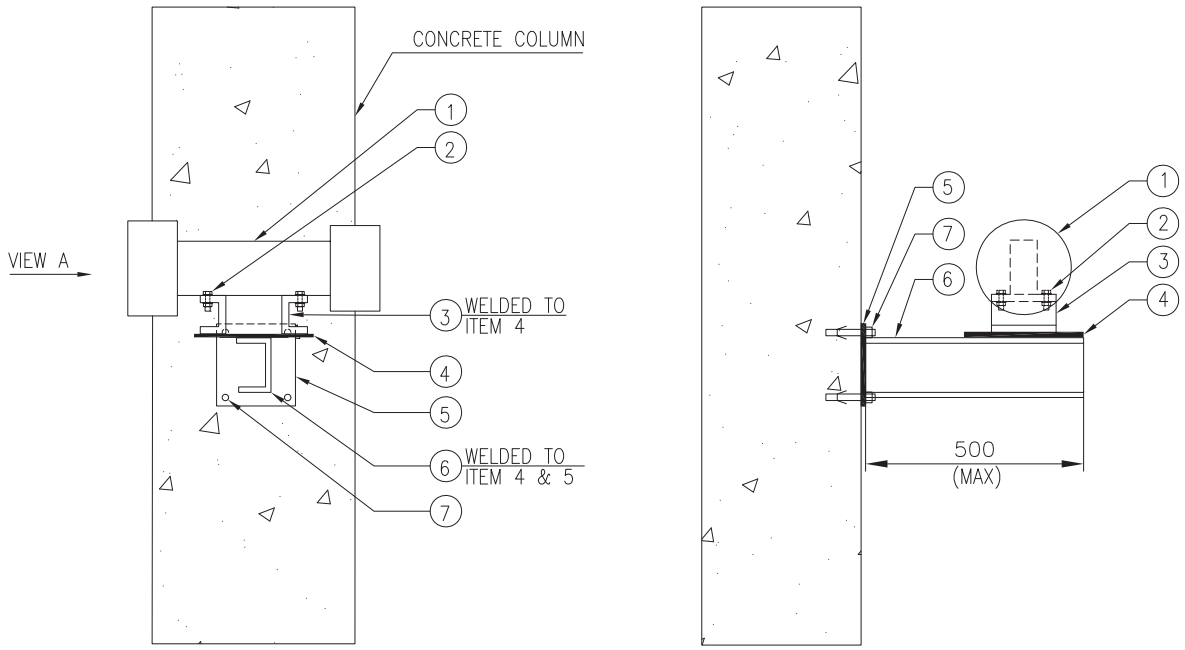

FRONT VIEW

VIEW–A

DRAWING NOT TO SCALE

NOTES
1) ALL DIMENSION ARE IN 'mm' UNLESS OTHERWISE SPECIFIED.
2) STEEL SECTIONS SHALL BE PREFABRICATED & PAINTED BEFORE INSTALLATION. AREA AFFECTED DUE TO SITE WELDING SHALL BE CLEANED AND PAINTED.
3) THESE DETAILS SHALL BE VERIFIED WITH ORDERED EQUIPMENT DRAWING.
4) SUPPLY & INSTALLATION OF STEEL IS NOT PART OF THIS INSTALLATION ARRANGEMENT. SAME IS COVERED ELSEWHERE.

Code	Contract No.	Document ID	Part	Rev.
		PIN–LEP–ELT–4011		00

Rev.	Date	Name (Drawn/Prepared)	Date	Name (Checked)	Date	Name (Approved)	Description	Acc. Code	Cat. Code	Acc. Code	Status
00	15.09.2017	KRP	15.09.2017	MLD	15.09.2017	RPM	RPM	ISSUED AS STANDARD			

BAR–Code

Store Location: Server/Share

Store Location: Folder

Store Name FASC2

Pro. Unit	TON	Group	Type of Document	Sheet
				1 / 1

Con. Unit	Scale	Order No.
	NTS	

thyssenkrupp

	Date	Name
Drawn	15.09.2017	KRP
Prepared	15.09.2017	MLD
Checked	15.09.2017	RPM
Approved	15.09.2017	RPM

Description
INSTALLATION STANDARDS – FIRE ALARM SYSTEM
SIREN ON CONCRETE COLUMN
(FASC2)

ISO A4

© thyssenkrupp Industrial Solutions (India) Private Limited 2017. All rights reserved

ITEM	DESCRIPTION	MATERIAL	QTY.	SUPPLY BY	INSTALLATION BY
1	SIREN	–	1 NO.	CLIENT	ELECTRICAL CONTRACTOR
2	HEXAGONAL HEAD BOLT M10 X 30mm LONG, THREADS UPTO HEAD, WITH SUITABLE NUTS & WASHERS (REFER NOTE–3)	HDGI	4 SETS	ELECTRICAL CONTRACTOR	ELECTRICAL CONTRACTOR
3	ISMC 75	M.S. PAINTED	AS REQUIRED	(REFER NOTE– 4)	
4	250 x 250 x10 THK PLATE	M.S. PAINTED	1 NO.	(REFER NOTE– 3 & 4)	
5	ISMC 100	M.S. PAINTED	AS REQUIRED	(REFER NOTE– 4)	

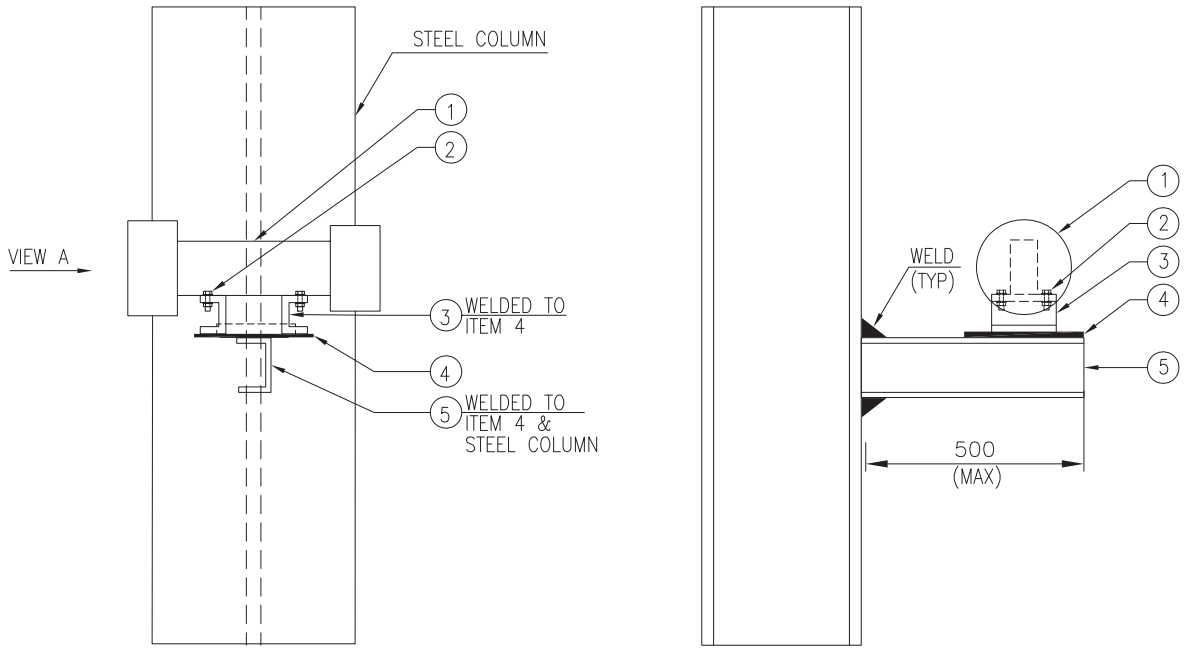

FRONT VIEW

VIEW–A

DRAWING NOT TO SCALE

NOTES
1) ALL DIMENSION ARE IN 'mm' UNLESS OTHERWISE SPECIFIED.
2) STEEL SECTIONS SHALL BE PREFABRICATED & PAINTED BEFORE INSTALLATION. AREA AFFECTED DUE TO SITE WELDING SHALL BE CLEANED AND PAINTED.
3) THESE DETAILS SHALL BE VERIFIED WITH ORDERED EQUIPMENT DRAWING.
4) SUPPLY & INSTALLATION OF STEEL IS NOT PART OF THIS INSTALLATION ARRANGEMENT. SAME IS COVERED ELSEWHERE.

Code	Contract No.	Document ID	Part	Rev.
		PIN–LEP–ELT–4011		00

Rev.	Date	Name (Drawn/Prepared)	Date	Name (Checked)	Date	Name (Approved)	Description	Acc. Code	Cat. Code	Acc. Code	Status
00	15.09.2017	KRP	15.09.2017	MLD	15.09.2017	RPM	RPM	ISSUED AS STANDARD			

BAR–Code

Store Location: Server/Share

Store Location: Folder

Store Name FASS1

Pro. Unit	TON	Group	Type of Document	Sheet
				1 / 1

Con. Unit	Scale	Order No.
	NTS	

thyssenkrupp

	Date	Name
Drawn	15.09.2017	KRP
Prepared	15.09.2017	MLD
Checked	15.09.2017	RPM
Approved	15.09.2017	RPM

Description
INSTALLATION STANDARDS – FIRE ALARM SYSTEM SIREN ON STEEL STRUCTURE (FASS1)

ISO A4

UH_BO_ISO_A4_P_E_tktSIndia.dwg / AG03_UH_BO_ISO_A4_P.dwg / 14.12.2016

© thyssenkrupp Industrial Solutions (India) Private Limited 2017. All rights reserved

ITEM	DESCRIPTION	MATERIAL	QTY.	SUPPLY BY	INSTALLATION BY
1	BEAM DETECTOR	–	1 NO.	CLIENT	ELECTRICAL CONTRACTOR
2	ACCESSORIES TO FIX BEAM DETECTOR SUCH AS PLASTIC ANCHORS, M6 HDGI SCREWS ETC. (REFER NOTE–2)	–	4 SETS	ELECTRICAL CONTRACTOR	ELECTRICAL CONTRACTOR

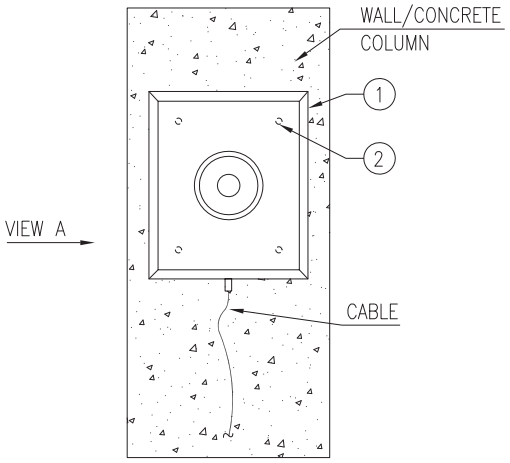

FRONT VIEW

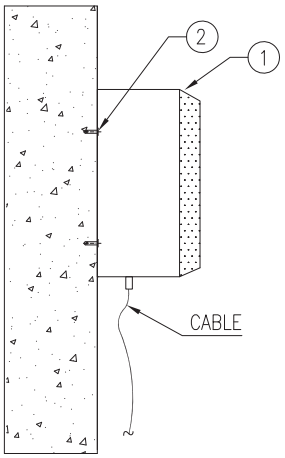

VIEW–A

DRAWING NOT TO SCALE

NOTES
1) ALL DIMENSION ARE IN 'mm' UNLESS OTHERWISE SPECIFIED.
2) THESE DETAILS SHALL BE VERIFIED WITH ORDERED EQUIPMENT DRAWING.

Code	Contract No.	Document ID	Part	Rev.
		PIN–LEP–ELT–4011		00

Rev.	Date	Name (Drawn/Prepared)		Date	Name (Checked)		Date	Name (Approved)		Description	Acc. Code	Cat. Code	Acc. Code	Status
00	15.09.2017	KRP	MLD	15.09.2017	RPM		15.09.2017	RPM		ISSUED AS STANDARD				

BAR–Code

Store Location: Server/Share

Store Location: Folder

Store Name FBDC1

Pro. Unit	TON	Group	Type of Document	Sheet
				1 / 1

Con. Unit	Scale	Order No.
	NTS	

thyssenkrupp

	Date	Name
Drawn	15.09.2017	KRP
Prepared	15.09.2017	MLD
Checked	15.09.2017	RPM
Approved	15.09.2017	RPM

Description
INSTALLATION STANDARDS – FIRE ALARM SYSTEM
BEAM DETECTOR ON WALL/
CONCRETE COLUMN : TYPE 1
(FBDC1)

ISO A4

UH_BO_ISO_A4_P_E_IktSIndia.dwg / AG03_UH_BO_ISO_A4_P.dwg / 14.12.2016

© thyssenkrupp Industrial Solutions (India) Private Limited 2017. All rights reserved

ITEM	DESCRIPTION	MATERIAL	QTY.	SUPPLY BY	INSTALLATION BY
1	BEAM DETECTOR	–	1 NO.	CLIENT	ELECTRICAL CONTRACTOR
2	HEXAGONAL HEAD BOLT M10 X 30mm LONG THREAD UPTO HEAD, WITH NUTS & WASHERS SUITABLE FOR CONNECTION SHOWN IN THIS DRAWING	H.D.G.I.	4 SETS	ELECTRICAL CONTRACTOR	ELECTRICAL CONTRACTOR
3	ISMC 75	M.S. PAINTED	AS REQUIRED	(REFER NOTE–3 & 4)	
4	ANCHOR FASTENER M6 x 50mm LONG WITH SUITABLE NUT & WASHER	GALVANISED STEEL / SS	2 SETS	ELECTRICAL CONTRACTOR	ELECTRICAL CONTRACTOR
5	100 x 100 x 10 THK. PLATE	M.S. PAINTED	1 NO.	(REFER NOTE– 4)	
6	100 x 100 x 10 THK. PLATE	M.S. PAINTED	1 NO.	(REFER NOTE– 3 & 4)	

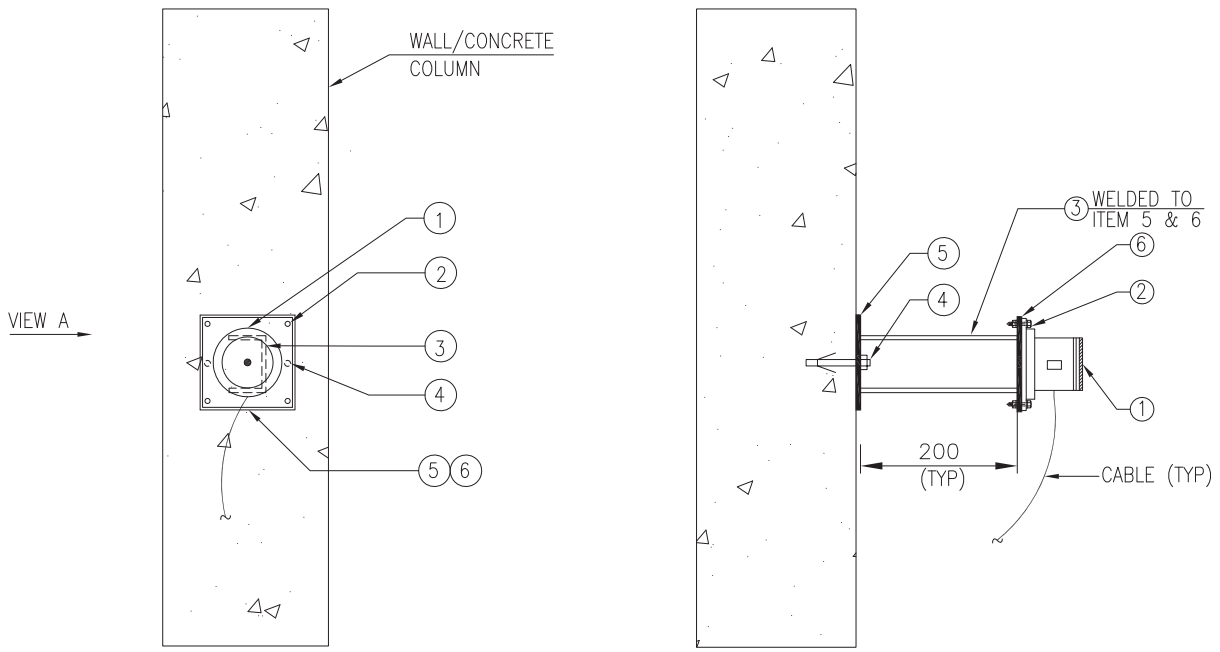

DRAWING NOT TO SCALE

NOTES
1) ALL DIMENSION ARE IN 'mm' UNLESS OTHERWISE SPECIFIED.
2) STEEL SECTIONS SHALL BE PREFABRICATED & PAINTED BEFORE INSTALLATION. AREA AFFECTED DUE TO SITE WELDING SHALL BE CLEANED AND PAINTED.
3) THESE DETAILS SHALL BE VERIFIED WITH ORDERED EQUIPMENT DRAWING.
4) SUPPLY & INSTALLATION OF STEEL IS NOT PART OF THIS INSTALLATION ARRANGEMENT. SAME IS COVERED ELSEWHERE.

Code	Contract No.	Document ID	Part	Rev.
		PIN–LEP–ELT–4011		00

Rev.	Date	Name (Drawn/Prepared)	Date	Name (Checked)	Date	Name (Approved)	Description	Acc. Code	Cat. Code	Acc. Code	Status
00	15.09.2017	KRP	MLD	15.09.2017	RPM	15.09.2017	RPM	ISSUED AS STANDARD			

BAR–Code

Store Location: Server/Share
Store Location: Folder
Store Name FBDC2

Pro. Unit	TON	Group	Type of Document	Sheet
				1 / 1

Con. Unit	Scale	Order No.
	NTS	

thyssenkrupp

	Date	Name
Drawn	15.09.2017	KRP
Prepared	15.09.2017	MLD
Checked	15.09.2017	RPM
Approved	15.09.2017	RPM

Description
INSTALLATION STANDARDS – FIRE ALARM SYSTEM
BEAM DETECTOR ON WALL/
CONCRETE COLUMN : TYPE 2
(FBDC2)

ISO A4

UH_BO_ISO_A4_P_E_tktSIndia.dwg / AG03_UH_BO_ISO_A4_P.dwg / 14.12.2016

© thyssenkrupp Industrial Solutions (India) Private Limited 2017. All rights reserved

ITEM	DESCRIPTION	MATERIAL	QTY.	SUPPLY BY	INSTALLATION BY
1	BEAM DETECTOR	–	1 NO.	CLIENT	ELECTRICAL CONTRACTOR
2	HEXAGONAL HEAD BOLT M10 X 30mm LONG THREAD UPTO HEAD, WITH NUTS & WASHERS (REFER NOTE–3)	H.D.G.I.	4 SETS	ELECTRICAL CONTRACTOR	ELECTRICAL CONTRACTOR
3	ISMC 75	M.S. PAINTED	AS REQUIRED	(REFER NOTE–3 & 4)	
4	100 x 100 x 10 THK. PLATE	M.S. PAINTED	1 NO.	(REFER NOTE– 3 & 4)	

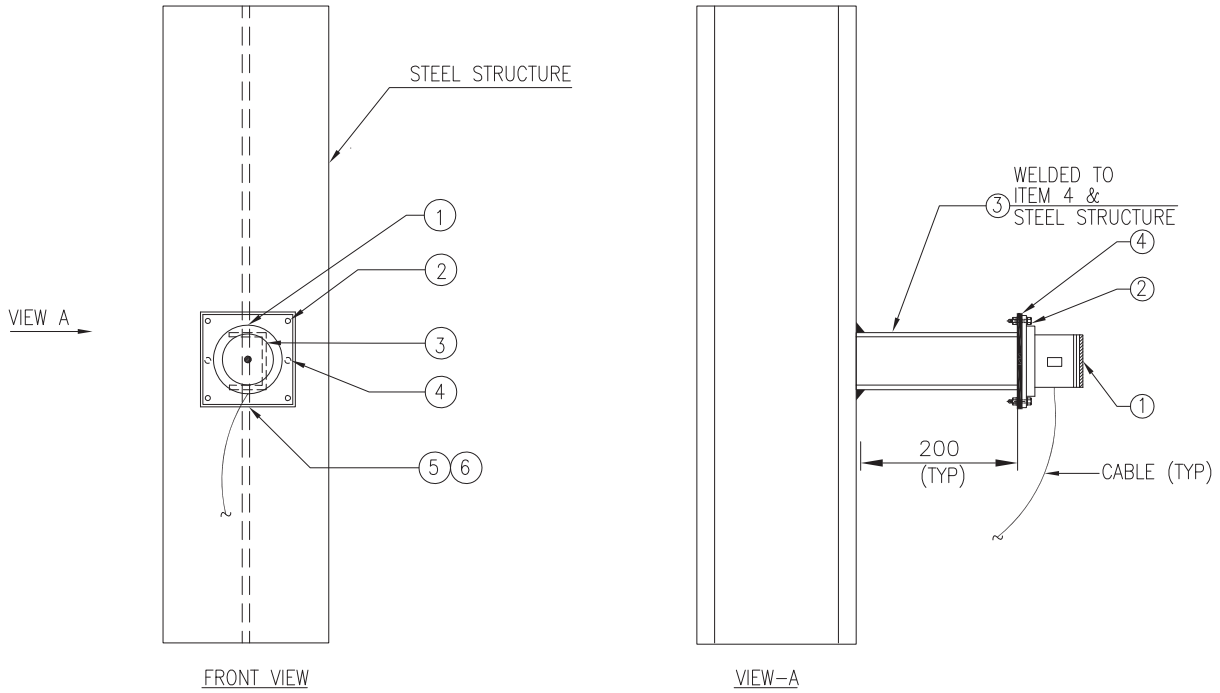

DRAWING NOT TO SCALE

NOTES
1) ALL DIMENSION ARE IN 'mm' UNLESS OTHERWISE SPECIFIED.
2) STEEL SECTIONS SHALL BE PREFABRICATED & PAINTED BEFORE INSTALLATION. AREA AFFECTED DUE TO SITE WELDING SHALL BE CLEANED AND PAINTED.
3) THESE DETAILS SHALL BE VERIFIED WITH ORDERED EQUIPMENT DRAWING.
4) SUPPLY & INSTALLATION OF STEEL IS NOT PART OF THIS INSTALLATION ARRANGEMENT. SAME IS COVERED ELSEWHERE.

Code	Contract No.	Document ID	Part	Rev.
		PIN–LEP–ELT–4011		00

Rev.	Date	Name (Drawn/Prepared)	Date	Name (Checked)	Date	Name (Approved)	Description	Acc. Code	Cat. Code	Acc. Code	Status
00	15.09.2017	KRP	MLD	15.09.2017	RPM	15.09.2017	RPM	ISSUED AS STANDARD			

BAR–Code

Store Location: Server/Share
Store Location: Folder
Store Name FBDS1

Pro. Unit	TON	Group	Type of Document	Sheet
				1 / 1

Con. Unit	Scale	Order No.
	NTS	

thyssenkrupp

	Date	Name
Drawn	15.09.2017	KRP
Prepared	15.09.2017	MLD
Checked	15.09.2017	RPM
Approved	15.09.2017	RPM

Description
INSTALLATION STANDARDS – FIRE ALARM SYSTEM BEAM DETECTOR ON STEEL STRUCTURE (FBDS1)

ISO A4

UH_BO_ISO_A4_P_E_tktSIndia.dwg / AG03_UH_BO_ISO_A4_P.dwg / 14.12.2016

© thyssenkrupp Industrial Solutions (India) Private Limited 2017. All rights reserved

ITEM	DESCRIPTION	MATERIAL	QTY.	SUPPLY BY	INSTALLATION BY
1	BEAM REFLECTOR	–	1 NO.	CLIENT	ELECTRICAL CONTRACTOR
2	HEXAGONAL HEAD BOLT M6 X 25mm LONG, THREADS UPTO HEAD, WITH SUITABLE NUTS & WASHERS (REFER NOTE–3)	HDGI	4 SETS	ELECTRICAL CONTRACTOR	ELECTRICAL CONTRACTOR
3	ANCHOR FASTENER M8 x 75 LONG WITH SUITABLE NUT & WASHER	GALVANISED STEEL / SS	2 SETS	ELECTRICAL CONTRACTOR	ELECTRICAL CONTRACTOR
4	25 x 3mm THK. FLAT AS INDICATED IN PLAN VIEW	M.S. PAINTED	AS REQUIRED	(REFER NOTE 3 & 4)	

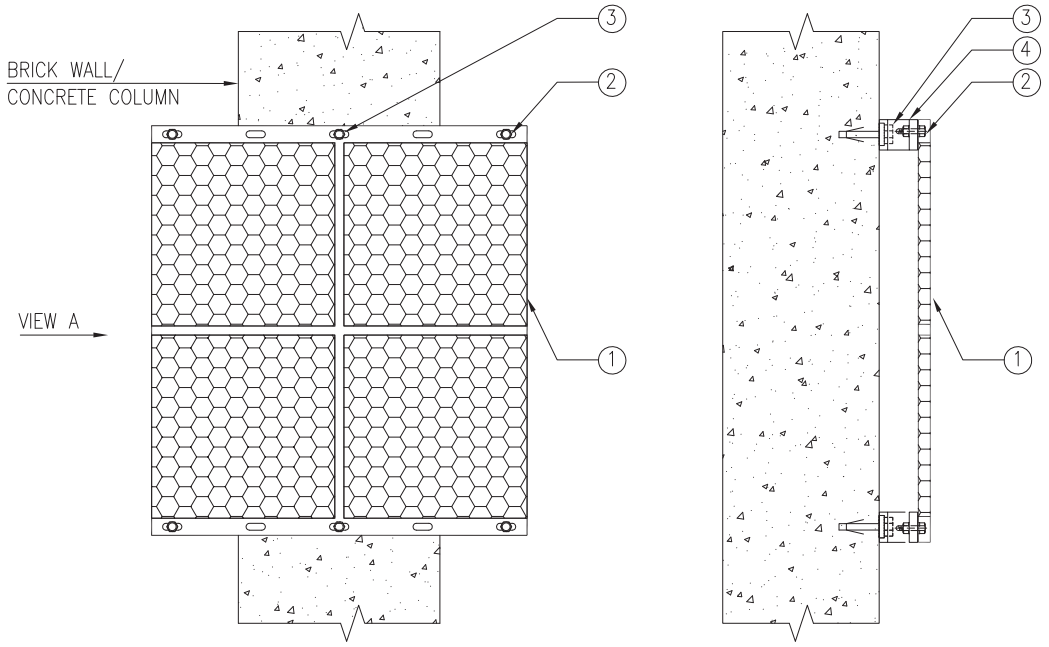

FRONT VIEW

VIEW–A

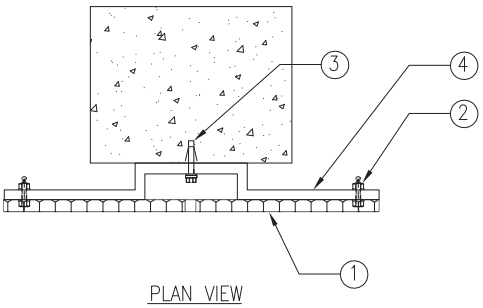

PLAN VIEW

DRAWING NOT TO SCALE

NOTES

1) ALL DIMENSION ARE IN 'mm' UNLESS OTHERWISE SPECIFIED.
2) STEEL SECTIONS SHALL BE PREFABRICATED & PAINTED BEFORE INSTALLATION.
3) THESE DETAILS SHALL BE VERIFIED WITH ORDERED EQUIPMENT DRAWING.
4) SUPPLY & INSTALLATION OF STEEL IS NOT PART OF THIS INSTALLATION ARRANGEMENT. SAME IS COVERED ELSEWHERE.

Code	Contract No.	Document ID	Part	Rev.
		PIN–LEP–ELT–4011		00

Rev.	Date	Name (Drawn/Prepared)		Date	Name (Checked)		Date	Name (Approved)	Description	Acc. Code	Cat. Code	Acc. Code	Status
00	15.09.2017	KRP	MLD	15.09.2017	RPM		15.09.2017	RPM	ISSUED AS STANDARD				

BAR–Code

Store Location: Server/Share

Store Location: Folder

Store Name FBRC1

Pro. Unit	TON	Group	Type of Document	Sheet
				1 / 1

Con. Unit	Scale	Order No.
	NTS	

thyssenkrupp

	Date	Name
Drawn	15.09.2017	KRP
Prepared	15.09.2017	MLD
Checked	15.09.2017	RPM
Approved	15.09.2017	RPM

Description
INSTALLATION STANDARDS – FIRE ALARM SYSTEM
REFLECTOR ON WALL/CONCRETE COLUMN
(FBRC1)

ISO A4

UH_BO_ISO_A4_P_E_tktSIndia.dwg / AG03_UH_BO_ISO_A4_P.dwg / 14.12.2016

© thyssenkrupp Industrial Solutions (India) Private Limited 2017. All rights reserved

ITEM	DESCRIPTION	MATERIAL	QTY.	SUPPLY BY	INSTALLATION BY
1	BEAM REFLECTOR	–	1 NO.	CLIENT	ELECTRICAL CONTRACTOR
2	ACCESSORIES TO FIX BEAM REFLECTOR SUCH AS PLASTIC ANCHORS, M6 HDGI SCREWS ETC. (REFER NOTE–2)	HDGI	6 SETS	ELECTRICAL CONTRACTOR	ELECTRICAL CONTRACTOR

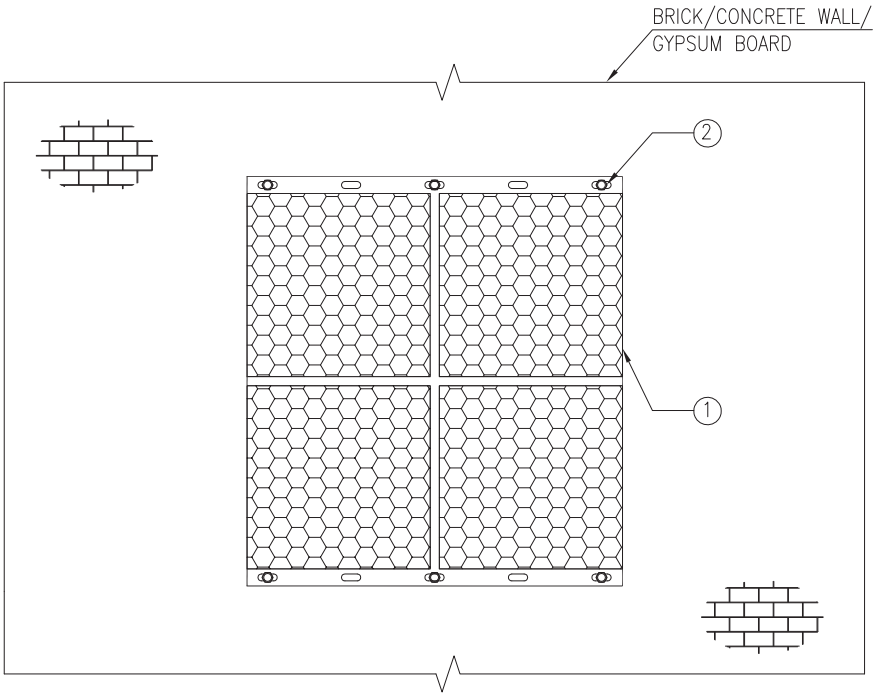

DRAWING NOT TO SCALE

NOTES
1) ALL DIMENSION ARE IN 'mm' UNLESS OTHERWISE SPECIFIED.
2) THESE DETAILS SHALL BE VERIFIED WITH ORDERED EQUIPMENT DRAWING.

Code	Contract No.	Document ID	Part	Rev.
		PIN–LEP–ELT–4011		00

Rev.	Date	Name (Drawn/Prepared)	Date	Name (Checked)	Date	Name (Approved)	Description	Acc. Code	Cat. Code	Acc. Code	Status
00	15.09.2017	KRP	15.09.2017	MLD	15.09.2017	RPM	15.09.2017	RPM	ISSUED AS STANDARD		

BAR–Code

Store Location: Server/Share
Store Location: Folder
Store Name FBRC2

Pro. Unit	TON	Group	Type of Document	Sheet
				1 / 1

Con. Unit	Scale	Order No.
	NTS	

thyssenkrupp

	Date	Name
Drawn	15.09.2017	KRP
Prepared	15.09.2017	MLD
Checked	15.09.2017	RPM
Approved	15.09.2017	RPM

Description
INSTALLATION STANDARDS – FIRE ALARM SYSTEM
BEAM REFLECTOR ON BRICK/CONCRETE
WALL/ GYPSUM BOARD
(FBRC2)

ISO A4

UH_BO_ISO_A4_P_E_tktSIndia.dwg / AG03_UH_BO_ISO_A4_P.dwg / 14.12.2016

© thyssenkrupp Industrial Solutions (India) Private Limited 2017. All rights reserved

ITEM	DESCRIPTION	MATERIAL	QTY.	SUPPLY BY	INSTALLATION BY
1	BEAM REFLECTOR	–	1 NO.	CLIENT	ELECTRICAL CONTRACTOR
2	HEXAGONAL HEAD BOLT M6 X 25mm LONG, THREADS UPTO HEAD, WITH SUITABLE NUTS & WASHERS (REFER NOTE–3)	HDGI	4 SETS	ELECTRICAL CONTRACTOR	ELECTRICAL CONTRACTOR
3	25 x 3mm THK. FLAT	M.S. PAINTED	AS REQUIRED	(REFER NOTE 3 & 4)	

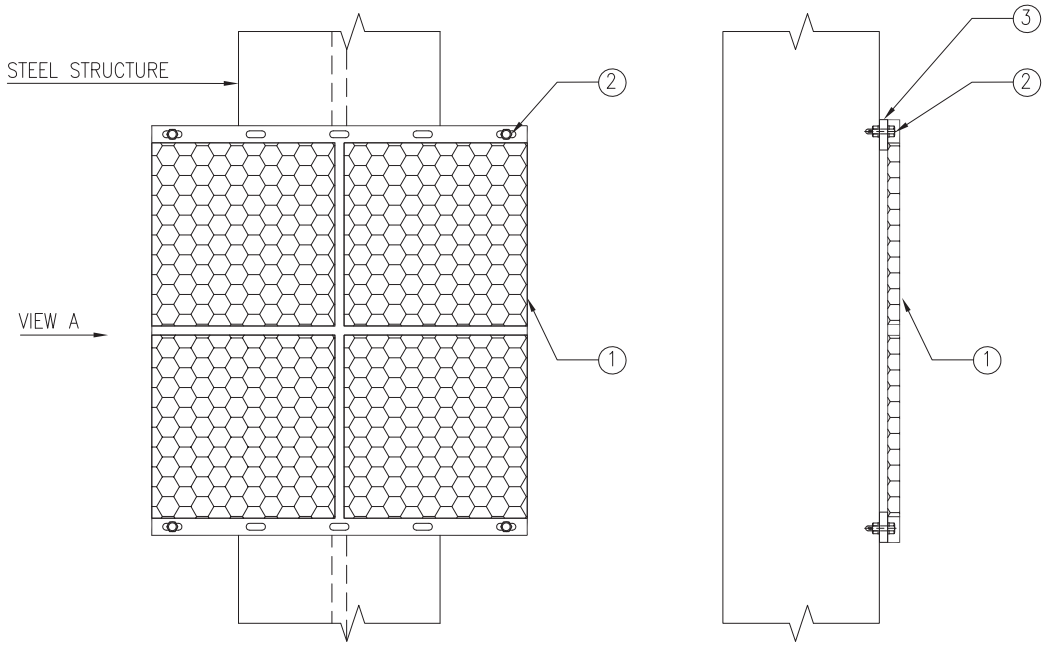

FRONT VIEW

VIEW–A

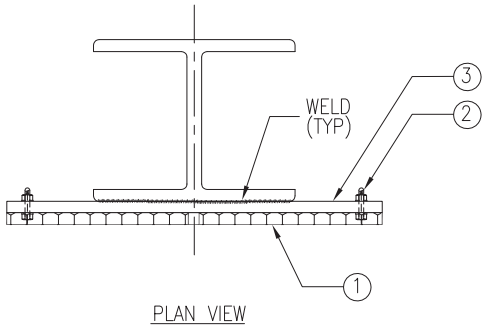

PLAN VIEW

DRAWING NOT TO SCALE

NOTES
1) ALL DIMENSION ARE IN 'mm' UNLESS OTHERWISE SPECIFIED.
2) STEEL SECTIONS SHALL BE PREFABRICATED & PAINTED BEFORE INSTALLATION. AREA AFFECTED DUE TO SITE WELDING SHALL BE CLEANED AND PAINTED.
3) THESE DETAILS SHALL BE VERIFIED WITH ORDERED EQUIPMENT DRAWING.
4) SUPPLY & INSTALLATION OF STEEL IS NOT PART OF THIS INSTALLATION ARRANGEMENT. SAME IS COVERED ELSEWHERE.

Code	Contract No.	Document ID	Part	Rev.
		PIN–LEP–ELT–4011		00

Rev.	Date	Name (Drawn/Prepared)	Date	Name (Checked)	Date	Name (Approved)	Description	Acc. Code	Cat. Code	Acc. Code	Status
00	15.09.2017	KRP	15.09.2017	MLD	15.09.2017	RPM	ISSUED AS STANDARD				

BAR–Code

Store Location: Server/Share

Store Location: Folder

Store Name FBRS1

Pro. Unit	TON	Group	Type of Document	Sheet
				1 / 1

Con. Unit	Scale	Order No.
	NTS	

thyssenkrupp

	Date	Name
Drawn	15.09.2017	KRP
Prepared	15.09.2017	MLD
Checked	15.09.2017	RPM
Approved	15.09.2017	RPM

Description
INSTALLATION STANDARDS – FIRE ALARM SYSTEM
BEAM REFLECTOR ON STEEL STRUCTURE
(FBRS1)

ISO A4

UH_BO_ISO_A4_P_E_tktSIndia.dwg / AG03_UH_BO_ISO_A4_P.dwg / 14.12.2016

© thyssenkrupp Industrial Solutions (India) Private Limited 2017. All rights reserved

UH_BO_ISO_A4_P_E_tktSIndia.dwg / AG03_UH_BO_ISO_A4_P.dwg / 14.12.2016

ITEM	DESCRIPTION	MATERIAL	QTY.	SUPPLY BY	INSTALLATION BY
1	MANUAL CALL POINT	PROJ. SPEC.	1 NO.	CLIENT	ELECTRICAL CONTRACTOR
2	ANCHOR FASTENER M6 x 50mm LONG WITH SUITABLE NUT & WASHER	GALVANISED STEEL / SS	2 SETS	ELECTRICAL CONTRACTOR	ELECTRICAL CONTRACTOR
3	ISMC 75	M.S. PAINTED	AS REQUIRED	(REFER NOTE-3 & 4)	
4	HEXAGONAL HEAD BOLT M6 X 25mm LONG, THREADS UPTO HEAD, WITH SUITABLE NUTS & WASHERS (REFER NOTE-3)	H.D.G.I.	4 SETS	ELECTRICAL CONTRACTOR	ELECTRICAL CONTRACTOR
5	CANOPY COVERED FROM 3 SIDES (REFER NOTE-5)	PROJ SPEC.	1 NO.	ELECTRICAL CONTRACTOR	ELECTRICAL CONTRACTOR
6	HEXAGONAL HEAD BOLT M6 X 25mm LONG, THREADS UPTO HEAD, WITH SUITABLE NUTS & WASHERS (FOR CANOPY FIXING)	H.D.G.I.	4 SETS	ELECTRICAL CONTRACTOR	ELECTRICAL CONTRACTOR

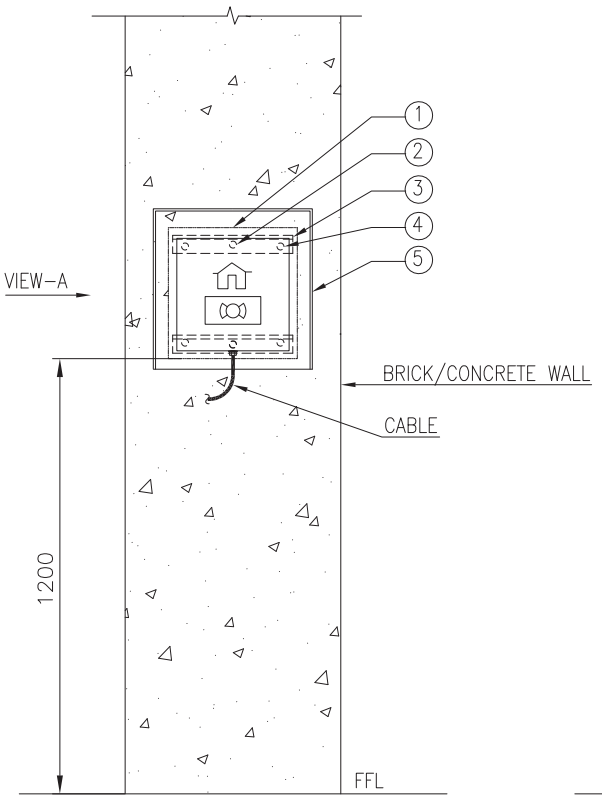

FRONT VIEW

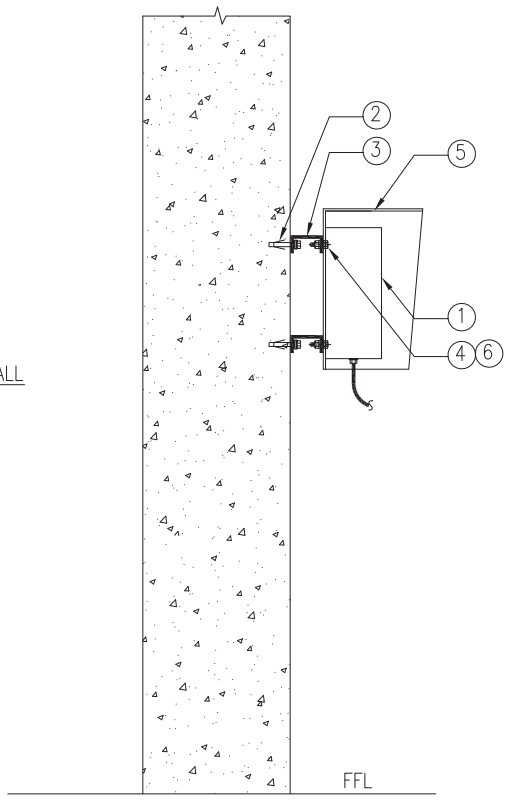

VIEW-A

DRAWING NOT TO SCALE

NOTES

1) ALL DIMENSION ARE IN 'mm' UNLESS OTHERWISE STATED.
2) STEEL SECTIONS SHALL BE PREFABRICATED & PAINTED BEFORE INSTALLATION.
3) THESE DETAILS SHALL BE VERIFIED WITH ORDERED EQUIPMENT DRAWING.
4) SUPPLY & INSTALLATION OF STEEL IS NOT PART OF THIS INSTALLATION ARRANGEMENT. SAME IS COVERED ELSEWHERE.
5) CANOPY COVERED FROM 3 SIDES SHALL BE PROVIDED FOR MANUAL CALL POINT INSTALLED OUTDOOR.

Code	Contract No.	Document ID	Part	Rev.
		PIN-LEP-ELT-4011		00

Rev.	Date	Name (Drawn/Prepared)	Date	Name (Checked)	Date	Name (Approved)	Description	Acc. Code	Cat. Code	Acc. Code	Status
00	15.09.2017	KRP MLD	15.09.2017	RPM	15.09.2017	RPM	ISSUED AS STANDARD				

BAR-Code

Store Location: Server/Share

Store Location: Folder

Store Name FCPC1

Pro. Unit	TON	Group	Type of Document	Sheet
				1 / 1

Con. Unit	Scale	Order No.
	NTS	

thyssenkrupp

	Date	Name
Drawn	15.09.2017	KRP
Prepared	15.09.2017	MLD
Checked	15.09.2017	RPM
Approved	15.09.2017	RPM

Description
INSTALLATION STANDARDS – FIRE ALARM SYSTEM
MANUAL CALL POINT MOUNTED ON
WALL/CONCRETE COLUMN
(FCPC1)

ISO A4

© thyssenkrupp Industrial Solutions (India) Private Limited 2017. All rights reserved

ITEM	DESCRIPTION	MATERIAL	QTY.	SUPPLY BY	INSTALLATION BY
1	MANUAL CALL POINT FOR CONCEALED/ DIRECT ON WALL MOUNTING WITH REQUIRED HARDWARE SUCH AS PLASTIC ANCHORS, M6 HDGI SCREWS ETC. (REFER NOTE-2)	–	1 NO.	CLIENT	ELECTRICAL CONTRACTOR

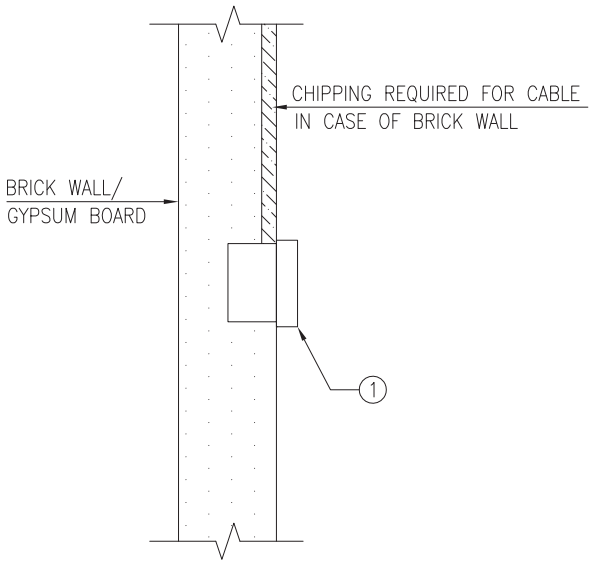

MANUAL CALL POINT CONCEALED IN BRICK WALL/GYPSUM BOARD
(VARIATION-1: TYPE V1)

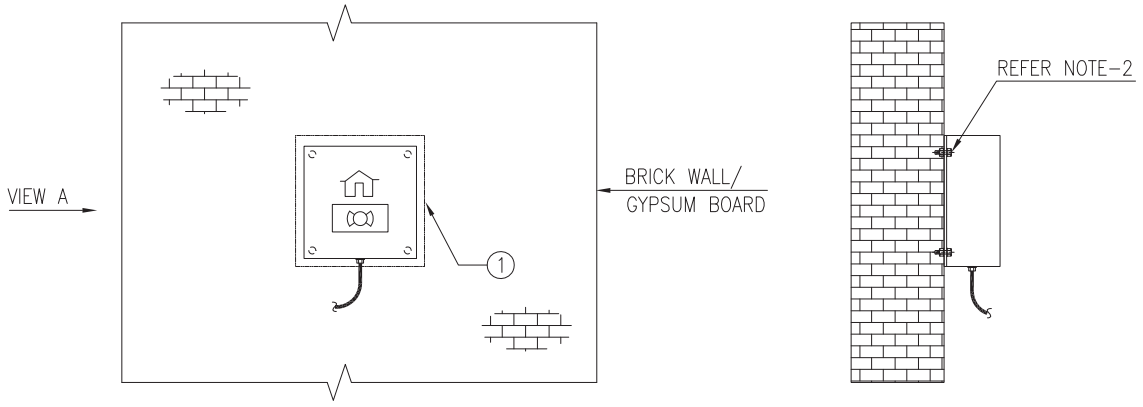

FRONT VIEW

VIEW-A

MANUAL CALL POINT DIRECT ON BRICK WALL/GYPSUM BOARD
(VARIATION-2: TYPE V2)

DRAWING NOT TO SCALE

NOTES
1) ALL DIMENSION ARE IN 'mm' UNLESS OTHERWISE SPECIFIED.
2) HARDWARE REQUIRED FOR INSTALLATION OF SPEAKER SHALL BE SUPPLIED & INSTALLED BY ELECTRICAL CONTRACTOR.

Code	Contract No.	Document ID	Part	Rev.
		PIN-LEP-ELT-4011		00

Rev.	Date	Name (Drawn/Prepared)		Date	Name (Checked)		Date	Name (Approved)	Description	Acc. Code	Cat. Code	Acc. Code	Status
00	15.09.2017	KRP	MLD	15.09.2017	RPM		15.09.2017	RPM	ISSUED AS STANDARD				

BAR-Code

Store Location: Server/Share
Store Location: Folder
Store Name FCPC2

Pro. Unit	TON	Group	Type of Document	Sheet
				1 / 1

Con. Unit	Scale	Order No.
	NTS	

thyssenkrupp

	Date	Name
Drawn	15.09.2017	KRP
Prepared	15.09.2017	MLD
Checked	15.09.2017	RPM
Approved	15.09.2017	RPM

Description
INSTALLATION STANDARDS – FIRE ALARM SYSTEM
MANUAL CALL POINT CONCEALED IN WALL/ GYPSUM BOARD, DIRECT ON WALL/ GYPSUM BOARD (FCPC2)

ISO A4

UH_BO_ISO_A4_P_E_tktSIndia.dwg / AG03_UH_BO_ISO_A4_P.dwg / 14.12.2016

© thyssenkrupp Industrial Solutions (India) Private Limited 2017. All rights reserved

ITEM	DESCRIPTION	MATERIAL	QTY.	SUPPLY BY	INSTALLATION BY
1	MANUAL CALL POINT	PROJ. SPEC.	1 NO.	CLIENT	ELECTRICAL CONTRACTOR
2	ISMC 75	M.S. PAINTED	AS REQUIRED	REFER NOTE-4	
3	150 x 150 x10 THK PLATE	M.S. PAINTED	1 NO.	REFER NOTE-4	
4	25 x 3mm THK. FLAT	M.S. PAINTED	1 METER	REFER NOTE-3 & 4	
5	HEXAGONAL HEAD BOLT M6 X 25mm LONG, THREADS UPTO HEAD, WITH SUITABLE NUTS & WASHERS (REFER NOTE-3)	H.D.G.I.	4 SETS	ELECTRICAL CONTRACTOR	ELECTRICAL CONTRACTOR
6	ANCHOR FASTENER M8 x 75 LONG WITH SUITABLE NUT & WASHER	GALVANISED STEEL / SS	4 NOS.	ELECTRICAL CONTRACTOR	ELECTRICAL CONTRACTOR
7	CABLE TIE	PLASTIC	AS REQUIRED	ELECTRICAL CONTRACTOR	ELECTRICAL CONTRACTOR
8	EDGE PROTECTION FOR CABLE	RUBBER	1 NO.	ELECTRICAL CONTRACTOR	ELECTRICAL CONTRACTOR
9	200x200x100 (LxWxH)mm PEDESTAL	CONCRETE (GRADE M20)	AS REQUIRED	ELECTRICAL CONTRACTOR	ELECTRICAL CONTRACTOR
10	CANOPY COVERED FROM 3 SIDES (REFER NOTE-5)	PROJ. SPEC.	1 NO.	ELECTRICAL CONTRACTOR	ELECTRICAL CONTRACTOR
11	HEXAGONAL HEAD BOLT M6 X 25mm LONG, THREADS UPTO HEAD, WITH SUITABLE NUTS & WASHERS (FOR CANOPY FIXING)	H.D.G.I.	4 SETS	ELECTRICAL CONTRACTOR	ELECTRICAL CONTRACTOR

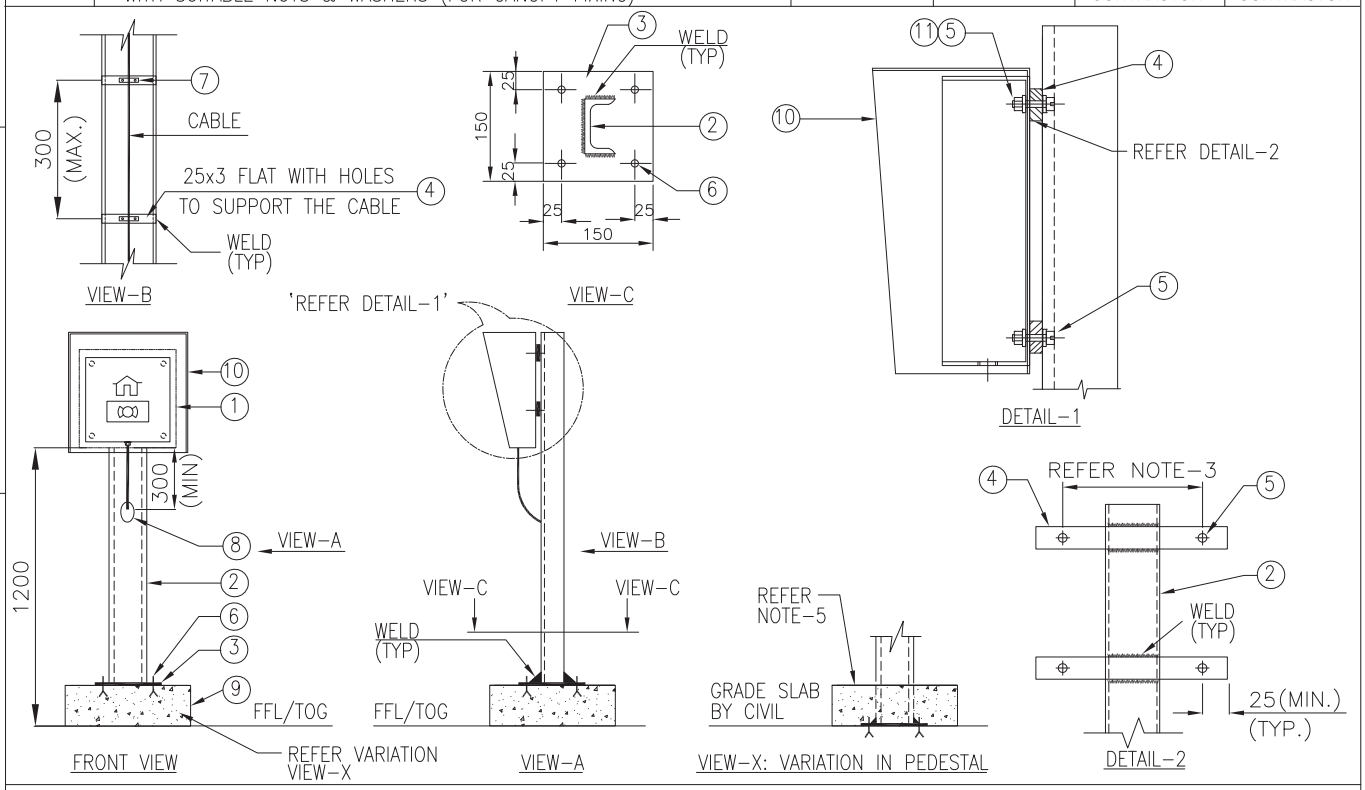

NOTES

1) ALL DIMENSION ARE IN 'mm' UNLESS OTHERWISE STATED.
2) STEEL SECTIONS SHALL BE PREFABRICATED & PAINTED BEFORE INSTALLATION. AREA AFFECTED DUE TO SITE WELDING SHALL BE CLEANED AND PAINTED.
3) THESE DETAILS SHALL BE VERIFIED WITH ORDERED EQUIPMENT DRAWING.
4) SUPPLY & INSTALLATION OF STEEL IS NOT PART OF THIS INSTALLATION ARRANGEMENT. SAME IS COVERED ELSEWHERE.
5) CANOPY COVERED FROM 3 SIDES SHALL BE PROVIDED FOR MANUAL CALL POINT INSTALLED OUTDOOR.
6) IN CASE OF ACID PROOF/BRICK LINING AREA, SUCH ARRANGEMENT SHALL BE FOLLOWED BY EL CONTRACTOR BEFORE START OF LINING WORK

DRAWING NOT TO SCALE

Code	Contract No.	Document ID	Part	Rev.
		PIN-LEP-ELT-4011		00

Rev.	Date	Name (Drawn/Prepared)	Date	Name (Checked)	Date	Name (Approved)	Description	Acc. Code	Cat. Code	Acc. Code	Status
00	15.09.2017	KRP	15.09.2017	MLD	15.09.2017	RPM	ISSUED AS STANDARD				

BAR-Code

Store Location: Server/Share

Store Location: Folder

Store Name FCPP1

Pro. Unit	TON	Group	Type of Document	Sheet
				1 / 1

Con. Unit	Scale	Order No.
	NTS	

thyssenkrupp

	Date	Name
Drawn	15.09.2017	KRP
Prepared	15.09.2017	MLD
Checked	15.09.2017	RPM
Approved	15.09.2017	RPM

Description

INSTALLATION STANDARDS – FIRE ALARM SYSTEM MANUAL CALL POINT ON SELF STANDING PEDESTAL (FCPP1)

ISO A4

UH_BO_ISO_A4_P_E_tktSIndia.dwg / AG03_UH_BO_ISO_A4_P.dwg / 14.12.2016

© thyssenkrupp Industrial Solutions (India) Private Limited 2017. All rights reserved

ITEM	DESCRIPTION	MATERIAL	QTY.	SUPPLY BY	INSTALLATION BY
1	MANUAL CALL POINT	PROJ. SPEC.	1 NO.	CLIENT	ELECTRICAL CONTRACTOR
2	ISMC 75	M.S. PAINTED	AS REQUIRED	REFER NOTE-4	
3	150 x 150 x10 THK PLATE	M.S. PAINTED	1 NO.	REFER NOTE-4	
4	25 x 3mm THK. FLAT	M.S. PAINTED	1 METER	REFER NOTE-3 & 4	
5	HEXAGONAL HEAD BOLT M6 X 25mm LONG, THREADS UPTO HEAD, WITH SUITABLE NUTS & WASHERS (REFER NOTE-3)	H.D.G.I.	4 SETS	ELECTRICAL CONTRACTOR	ELECTRICAL CONTRACTOR
6	CABLE TIE	PLASTIC	AS REQUIRED	ELECTRICAL CONTRACTOR	ELECTRICAL CONTRACTOR
7	EDGE PROTECTION FOR CABLE	RUBBER	1 NO.	ELECTRICAL CONTRACTOR	ELECTRICAL CONTRACTOR
8	CANOPY COVERED FROM 3 SIDES (REFER NOTE-5)	PROJ. SPEC.	1 NO.	ELECTRICAL CONTRACTOR	ELECTRICAL CONTRACTOR
9	HEXAGONAL HEAD BOLT M6 X 25mm LONG, THREADS UPTO HEAD, WITH SUITABLE NUTS & WASHERS (FOR CANOPY FIXING)	H.D.G.I.	4 SETS	ELECTRICAL CONTRACTOR	ELECTRICAL CONTRACTOR

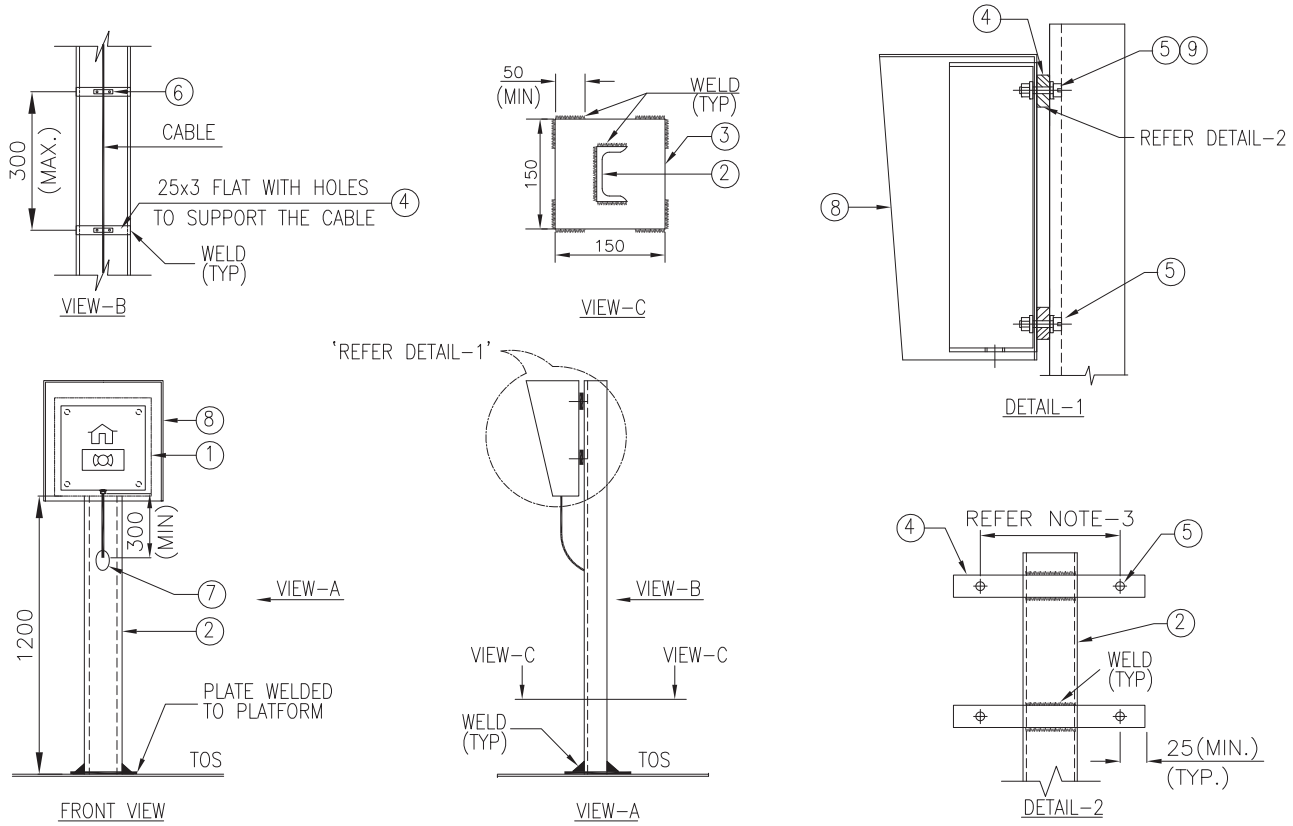

NOTES

DRAWING NOT TO SCALE

1) ALL DIMENSION ARE IN 'mm' UNLESS OTHERWISE STATED.
2) STEEL SECTIONS SHALL BE PREFABRICATED & PAINTED BEFORE INSTALLATION. AREA AFFECTED DUE TO SITE WELDING SHALL BE CLEANED AND PAINTED.
3) THESE DETAILS SHALL BE VERIFIED WITH ORDERED EQUIPMENT DRAWING.
4) SUPPLY & INSTALLATION OF STEEL IS NOT PART OF THIS INSTALLATION ARRANGEMENT. SAME IS COVERED ELSEWHERE.
5) CANOPY COVERED FROM 3 SIDES SHALL BE PROVIDED FOR MANUAL CALL POINT INSTALLED OUTDOOR.

Code	Contract No.	Document ID	Part	Rev.
		PIN-LEP-ELT-4011		00

Rev.	Date	Name (Drawn/Prepared)	Date	Name (Checked)	Date	Name (Approved)	Description	Acc. Code	Cat. Code	Acc. Code	Status
00	15.09.2017	KRP	MLD	15.09.2017	RPM	15.09.2017	RPM	ISSUED AS STANDARD			

BAR-Code

Store Location: Server/Share

Store Location: Folder

Store Name FCPP2

Pro. Unit	TON	Group	Type of Document	Sheet
				1 / 1

Con. Unit	Scale	Order No.
	NTS	

thyssenkrupp

	Date	Name
Drawn	15.09.2017	KRP
Prepared	15.09.2017	MLD
Checked	15.09.2017	RPM
Approved	15.09.2017	RPM

Description
INSTALLATION STANDARDS – FIRE ALARM SYSTEM MANUAL CALL POINT ON STEEL PLATFORM (FCPP2)

ISO A4

UH_BO_ISO_A4_P_E_tktSIndia.dwg / AG03_UH_BO_ISO_A4_P.dwg / 14.12.2016

© thyssenkrupp Industrial Solutions (India) Private Limited 2017. All rights reserved

UH_BO_ISO_A4_P_E_tktSIndia.dwg / AG03_UH_BO_ISO_A4_P.dwg / 14.12.2016

ITEM	DESCRIPTION	MATERIAL	QTY.	SUPPLY BY	INSTALLATION BY
1	MANUAL CALL POINT	PROJ. SPEC.	1 NO.	CLIENT	ELECTRICAL CONTRACTOR
2	ISMC 75	M.S. PAINTED	AS REQUIRED	REFER NOTE-4	
3	25 x 3mm THK. FLAT	M.S. PAINTED	1.0 METER	REFER NOTE-3 & 4	
4	U BOLT M10 SIZE THREADED AT THE END SUITABLE FOR HANDRAIL PIPE WITH NUT & WASHERS.	H.D.G.I.	2 SETS	ELECTRICAL CONTRACTOR	ELECTRICAL CONTRACTOR
5	HEXAGONAL HEAD BOLT M6 X 25mm LONG, THREADS UPTO HEAD, WITH SUITABLE NUTS & WASHERS (REFER NOTE-3)	H.D.G.I.	6 SETS	ELECTRICAL CONTRACTOR	ELECTRICAL CONTRACTOR
6	CABLE TIE	PLASTIC	AS REQUIRED	ELECTRICAL CONTRACTOR	ELECTRICAL CONTRACTOR
7	EDGE PROTECTION FOR CABLE	RUBBER	1 NO.	ELECTRICAL CONTRACTOR	ELECTRICAL CONTRACTOR
8	CANOPY COVERED FROM 3 SIDES (REFER NOTE-5)	PROJ. SPEC.	1 NO.	ELECTRICAL CONTRACTOR	ELECTRICAL CONTRACTOR
9	HEXAGONAL HEAD BOLT M6 X 25mm LONG, THREADS UPTO HEAD, WITH SUITABLE NUTS & WASHERS (FOR CANOPY FIXING)	H.D.G.I.	4 SETS	ELECTRICAL CONTRACTOR	ELECTRICAL CONTRACTOR

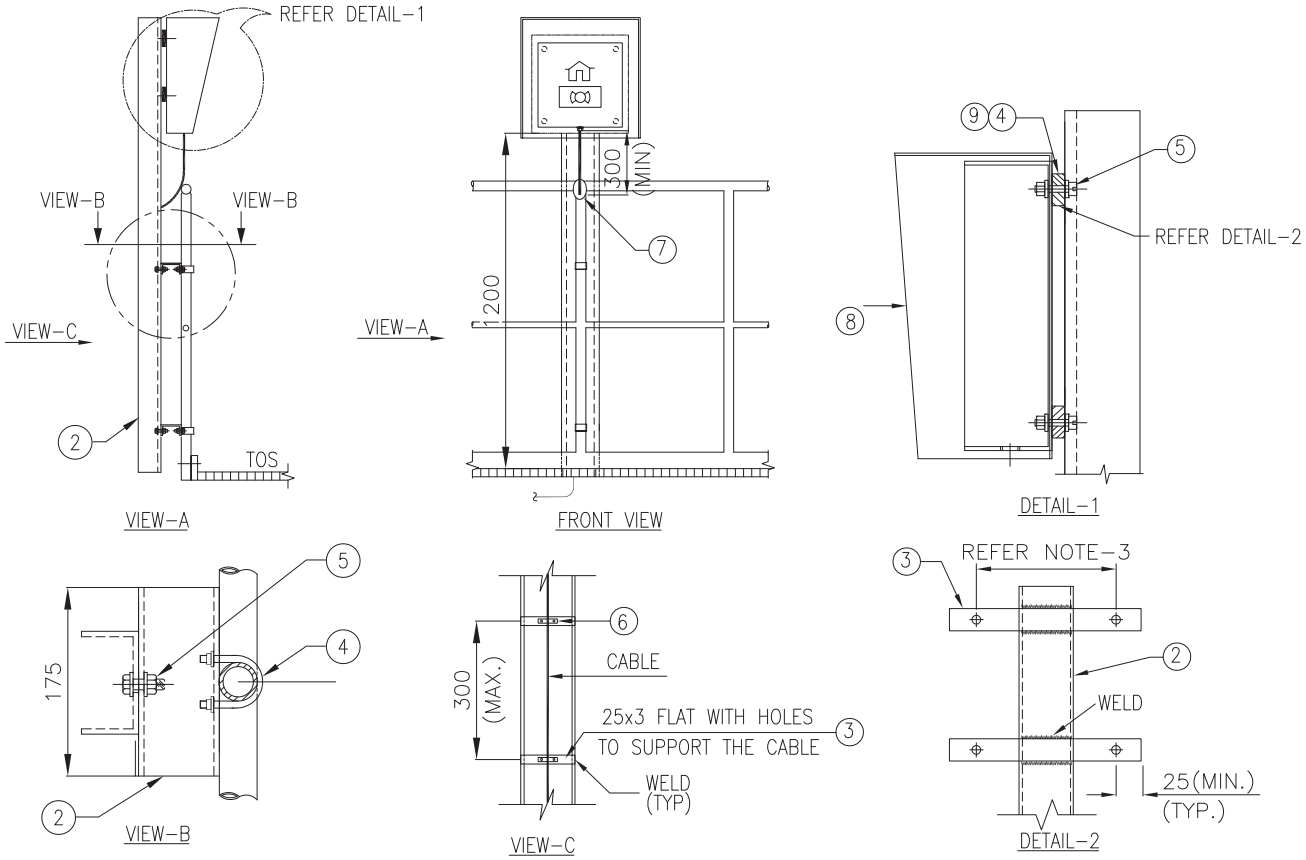

NOTES

1) ALL DIMENSION ARE IN 'mm' UNLESS OTHERWISE STATED.
2) STEEL SECTIONS SHALL BE PREFABRICATED & PAINTED BEFORE INSTALLATION. AREA AFFECTED DUE TO SITE WELDING SHALL BE CLEANED AND PAINTED.
3) THESE DETAILS SHALL BE VERIFIED WITH ORDERED EQUIPMENT DRAWING.
4) SUPPLY & INSTALLATION OF STEEL IS NOT PART OF THIS INSTALLATION ARRANGEMENT. SAME IS COVERED ELSEWHERE.
5) CANOPY COVERED FROM 3 SIDES SHALL BE PROVIDED FOR MANUAL CALL POINT INSTALLED OUTDOOR.

DRAWING NOT TO SCALE

Code	Contract No.	Document ID	Part	Rev.
		PIN-LEP-ELT-4011		00

Rev.	Date	Name (Drawn/Prepared)	Date	Name (Checked)	Date	Name (Approved)	Description	Acc. Code	Cat. Code	Acc. Code	Status
00	15.09.2017	KRP	15.09.2017	MLD	15.09.2017	RPM	ISSUED AS STANDARD				

BAR-Code

Store Location: Server/Share

Store Location: Folder

Store Name FCPR1

Pro. Unit	TON	Group	Type of Document	Sheet
				1 / 1

Con. Unit	Scale	Order No.
	NTS	

thyssenkrupp

	Date	Name
Drawn	15.09.2017	KRP
Prepared	15.09.2017	MLD
Checked	15.09.2017	RPM
Approved	15.09.2017	RPM

Description
INSTALLATION STANDARDS - FIRE ALARM SYSTEM MANUAL CALL POINT ON RAILING (FCPR1)

ISO A4

© thyssenkrupp Industrial Solutions (India) Private Limited 2017. All rights reserved

ITEM	DESCRIPTION	MATERIAL	QTY.	SUPPLY BY	INSTALLATION BY
1	MANUAL CALL POINT	PROJ. SPEC.	1 NO.	CLIENT	ELECTRICAL CONTRACTOR
2	ISMC 75	M.S. PAINTED	AS REQUIRED	REFER NOTE-3 & 4	
3	HEXAGONAL HEAD BOLT M6 X 25mm LONG, THREADS UPTO HEAD, WITH SUITABLE NUTS & WASHERS (REFER NOTE-3)	HDGI	4 SETS	ELECTRICAL CONTRACTOR	ELECTRICAL CONTRACTOR
4	CANOPY COVERED FROM 3 SIDES (REFER NOTE-5)	PROJ. SPEC.	1 NO.	ELECTRICAL CONTRACTOR	ELECTRICAL CONTRACTOR
5	HEXAGONAL HEAD BOLT M6 X 25mm LONG, THREADS UPTO HEAD, WITH SUITABLE NUTS & WASHERS (FOR CANOPY FIXING)	HDGI	4 SETS	ELECTRICAL CONTRACTOR	ELECTRICAL CONTRACTOR

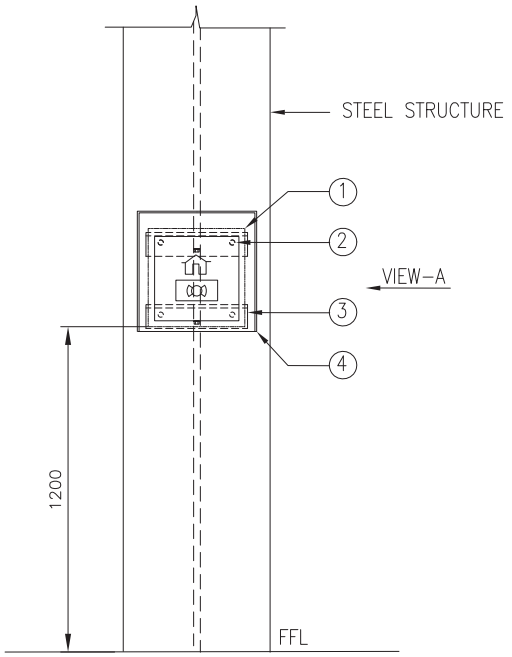

FRONT VIEW

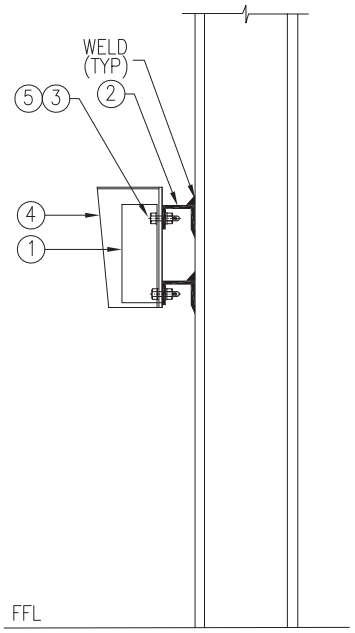

VIEW-A

DRAWING NOT TO SCALE

NOTES

1) ALL DIMENSION ARE IN 'mm' UNLESS OTHERWISE STATED.
2) STEEL SECTIONS SHALL BE PREFABRICATED & PAINTED BEFORE INSTALLATION. AREA AFFECTED DUE TO SITE WELDING SHALL BE CLEANED AND PAINTED.
3) THESE DETAILS SHALL BE VERIFIED WITH ORDERED EQUIPMENT DRAWING.
4) SUPPLY & INSTALLATION OF STEEL IS NOT PART OF THIS INSTALLATION ARRANGEMENT. SAME IS COVERED ELSEWHERE.
5) CANOPY COVERED FROM 3 SIDES SHALL BE PROVIDED FOR MANUAL CALL POINT INSTALLED OUTDOOR.

Code	Contract No.	Document ID	Part	Rev.
		PIN-LEP-ELT-4011		00

Rev.	Date	Name (Drawn/Prepared)	Date	Name (Checked)	Date	Name (Approved)	Description	Acc. Code	Cat. Code	Acc. Code	Status
00	15.09.2017	KRP	15.09.2017	MLD	15.09.2017	RPM	ISSUED AS STANDARD				

BAR-Code

Store Location: Server/Share

Store Location: Folder

Store Name FCPS1

Pro. Unit	TON	Group	Type of Document	Sheet
				1 / 1

Con. Unit	Scale	Order No.
	NTS	

thyssenkrupp

	Date	Name
Drawn	15.09.2017	KRP
Prepared	15.09.2017	MLD
Checked	15.09.2017	RPM
Approved	15.09.2017	RPM

Description
INSTALLATION STANDARDS – FIRE ALARM SYSTEM MANUAL CALL POINT ON STEEL STRUCTURE (FCPS1)

ISO A4

UH_BO_ISO_A4_P_E_tktSIndia.dwg / AG03_UH_BO_ISO_A4_P.dwg / 14.12.2016

© thyssenkrupp Industrial Solutions (India) Private Limited 2017. All rights reserved

ITEM	DESCRIPTION	MATERIAL	QTY.	SUPPLY BY	INSTALLATION BY
1	MULTI-SENSOR DETECTOR WITH BASE AND JUNCTION BOX	–	1 NO.	CLIENT	ELECTRICAL CONTRACTOR
2	HARDWARE TO FIX DETECTOR, JUNCTION BOX SUCH AS PLASTIC ANCHORS, SUITABLE SIZE SCREWS ETC. (REFER NOTE-2)	HDGI	AS REQUIRED	ELECTRICAL CONTRACTOR	ELECTRICAL CONTRACTOR

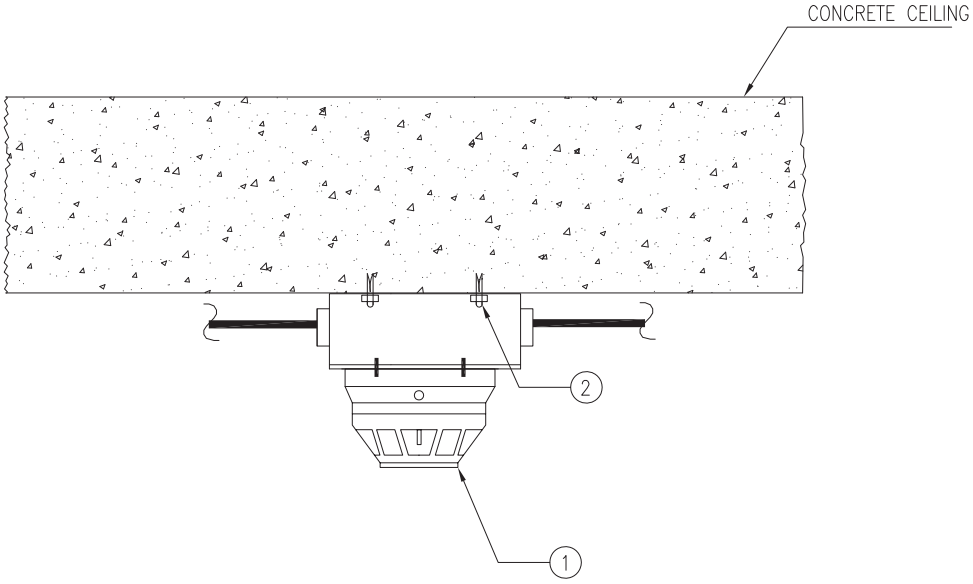

DRAWING NOT TO SCALE

NOTES
1) ALL DIMENSION ARE IN 'mm' UNLESS OTHERWISE SPECIFIED.
2) THESE DETAILS SHALL BE VERIFIED WITH ORDERED EQUIPMENT DRAWING.

Code	Contract No.	Document ID	Part	Rev.
		PIN-LEP-ELT-4011		00

Rev.	Date	Name (Drawn/Prepared)		Date	Name (Checked)		Date	Name (Approved)	Description	Acc. Code	Cat. Code	Acc. Code	Status
00	15.09.2017	KRP	MLD	15.09.2017	RPM		15.09.2017	RPM	ISSUED AS STANDARD				

BAR-Code

Store Location: Server/Share
Store Location: Folder
Store Name FMDC1

Pro. Unit	TON	Group	Type of Document	Sheet
				1 / 1

Con. Unit	Scale	Order No.
	NTS	

thyssenkrupp

	Date	Name
Drawn	15.09.2017	KRP
Prepared	15.09.2017	MLD
Checked	15.09.2017	RPM
Approved	15.09.2017	RPM

Description
INSTALLATION STANDARDS – FIRE ALARM SYSTEM
MULTI-SENSOR DETECTOR ON
CONCRETE CEILING
(FMDC1)

ISO A4

UH_BO_ISO_A4_P_E_IktSIndia.dwg / AG03_UH_BO_ISO_A4_P.dwg / 14.12.2016

© thyssenkrupp Industrial Solutions (India) Private Limited 2017. All rights reserved

UH_BO_ISO_A4_P_E_tktSIndia.dwg / AG03_UH_BO_ISO_A4_P.dwg / 14.12.2016

ITEM	DESCRIPTION	MATERIAL	QTY.	SUPPLY BY	INSTALLATION BY
1	MULTI-SENSOR DETECTOR WITH BASE	–	1 NO.	CLIENT	ELECTRICAL CONTRACTOR
2	ACCESSORIES TO FIX DETECTOR SUCH AS SUITABLE SIZE SCREWS ETC. (REFER NOTE-2 & 3)	–	AS REQUIRED	ELECTRICAL CONTRACTOR	ELECTRICAL CONTRACTOR

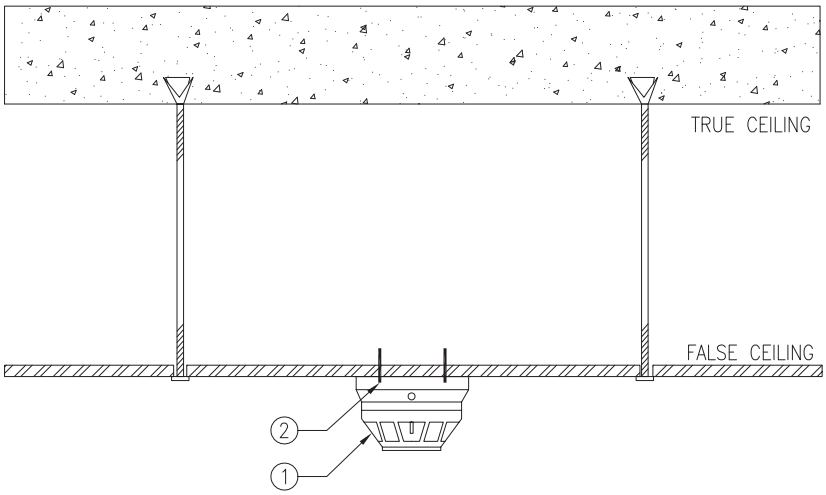

DRAWING NOT TO SCALE

NOTES
1) ALL DIMENSION ARE IN 'mm' UNLESS OTHERWISE SPECIFIED.
2) THESE DETAILS SHALL BE VERIFIED WITH ORDERED EQUIPMENT DRAWING.
3) SIMILAR INSTALLATION IS APPLICABLE IN CASE OF GYPSUM BOARD.

Code	Contract No.	Document ID	Part	Rev.
		PIN-LEP-ELT-4011		00

Rev.	Date	Name (Drawn/Prepared)	Date	Name (Checked)	Date	Name (Approved)	Description	Acc. Code	Cat. Code	Acc. Code	Status
00	15.09.2017	KRP	15.09.2017	MLD	15.09.2017	RPM	ISSUED AS STANDARD				

BAR-Code

Store Location: Server/Share
Store Location: Folder
Store Name FMDF1

Pro. Unit	TON	Group	Type of Document	Sheet
				1 / 1

Con. Unit	Scale	Order No.
	NTS	

thyssenkrupp

	Date	Name
Drawn	15.09.2017	KRP
Prepared	15.09.2017	MLD
Checked	15.09.2017	RPM
Approved	15.09.2017	RPM

Description
INSTALLATION STANDARDS – FIRE ALARM SYSTEM
MULTI-SENSOR DETECTOR ON
FALSE CEILING
(FMDF1)

ISO A4

© thyssenkrupp Industrial Solutions (India) Private Limited 2017. All rights reserved

ITEM	DESCRIPTION	MATERIAL	QTY.	SUPPLY BY	INSTALLATION BY
1	MULTI-SENSOR DETECTOR WITH BASE AND JUNCTION BOX	–	1 NO.	CLIENT	ELECTRICAL CONTRACTOR
2	HARDWARE TO FIX DETECTOR, JUNCTION BOX SUCH AS SUITABLE SIZE SCREWS ETC. (REFER NOTE-3)	HDGI	AS REQUIRED	ELECTRICAL CONTRACTOR	ELECTRICAL CONTRACTOR
3	ISA 75 (75X75X6mm)	MS PAINTED	AS REQUIRED	(REFER NOTE 3 & 4)	

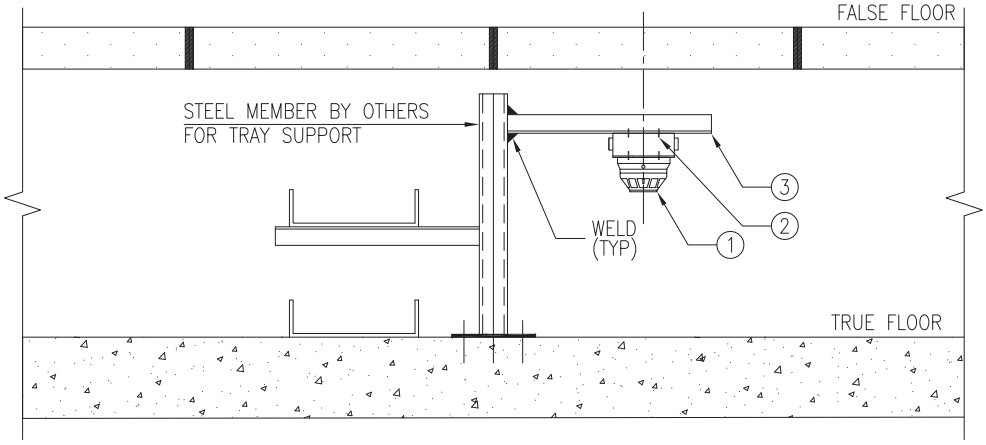

DRAWING NOT TO SCALE

NOTES
1) ALL DIMENSION ARE IN 'mm' UNLESS OTHERWISE SPECIFIED.
2) STEEL SECTIONS SHALL BE PREFABRICATED & PAINTED BEFORE INSTALLATION. AREA AFFECTED DUE TO SITE WELDING SHALL BE CLEANED AND PAINTED.
3) THESE DETAILS SHALL BE VERIFIED WITH ORDERED EQUIPMENT DRAWING.
4) SUPPLY & INSTALLATION OF STEEL IS NOT PART OF THIS INSTALLATION ARRANGEMENT. SAME IS COVERED ELSEWHERE.

Code	Contract No.	Document ID	Part	Rev.
		PIN-LEP-ELT-4011		00

Rev.	Date	Name (Drawn/Prepared)	Date	Name (Checked)	Date	Name (Approved)	Description	Acc. Code	Cat. Code	Acc. Code	Status
00	15.09.2017	KRP	15.09.2017	RPM	15.09.2017	RPM	ISSUED AS STANDARD				

BAR-Code

Store Location: Server/Share
Store Location: Folder
Store Name FMDF2

Pro. Unit	TON	Group	Type of Document	Sheet
				1 / 1

Con. Unit	Scale	Order No.
	NTS	

thyssenkrupp

	Date	Name
Drawn	15.09.2017	KRP
Prepared	15.09.2017	MLD
Checked	15.09.2017	RPM
Approved	15.09.2017	RPM

Description
INSTALLATION STANDARDS – FIRE ALARM SYSTEM MULTI-SENSOR DETECTOR IN FALSE FLOOR TYPE-1 (FMDF2)

ISO A4

UH_BO_ISO_A4_P_E_tktSIndia.dwg / AG03_UH_BO_ISO_A4_P.dwg / 14.12.2016

© thyssenkrupp Industrial Solutions (India) Private Limited 2017. All rights reserved

ITEM	DESCRIPTION	MATERIAL	QTY.	SUPPLY BY	INSTALLATION BY
1	MULTI-SENSOR DETECTOR WITH BASE AND JUNCTION BOX	–	1 NO.	CLIENT	ELECTRICAL CONTRACTOR
2	HARDWARE TO FIX DETECTOR, JUNCTION BOX SUCH AS SUITABLE SIZE SCREWS ETC. (REFER NOTE-3)	HDGI	AS REQUIRED	ELECTRICAL CONTRACTOR	ELECTRICAL CONTRACTOR
3	ISA 75 (75X75X6mm)	MS PAINTED	AS REQUIRED	(REFER NOTE 3 & 4)	
4	ANCHOR FASTENER M6 x 50mm LONG WITH SUITABLE NUT & WASHER	GALVANISED STEEL / SS	2 SETS	ELECTRICAL CONTRACTOR	ELECTRICAL CONTRACTOR
5	150 x 150 x10 THK PLATE	M.S. PAINTED	1 NO.	(REFER NOTE 4)	

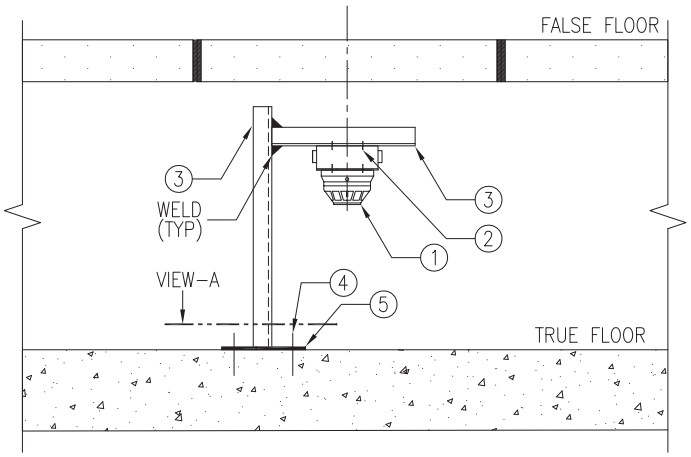

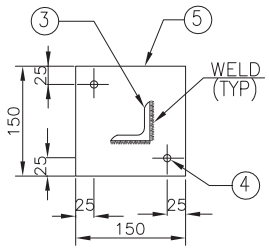

VIEW-A

DRAWING NOT TO SCALE

NOTES
1) ALL DIMENSION ARE IN 'mm' UNLESS OTHERWISE SPECIFIED.
2) STEEL SECTIONS SHALL BE PREFABRICATED & PAINTED BEFORE INSTALLATION. AREA AFFECTED DUE TO SITE WELDING SHALL BE CLEANED AND PAINTED.
3) THESE DETAILS SHALL BE VERIFIED WITH ORDERED EQUIPMENT DRAWING.
4) SUPPLY & INSTALLATION OF STEEL IS NOT PART OF THIS INSTALLATION ARRANGEMENT. SAME IS COVERED ELSEWHERE.

Code	Contract No.	Document ID	Part	Rev.
		PIN-LEP-ELT-4011		00

Rev.	Date	Name (Drawn/Prepared)	Date	Name (Checked)	Date	Name (Approved)	Description	Acc. Code	Cat. Code	Acc. Code	Status
00	15.09.2017	KRP	MLD	15.09.2017	RPM	15.09.2017	RPM	ISSUED AS STANDARD			

BAR-Code

Store Location: Server/Share
Store Location: Folder
Store Name FMDF3

Pro. Unit	TON	Group	Type of Document	Sheet
				1 / 1

Con. Unit	Scale	Order No.
	NTS	

thyssenkrupp

	Date	Name
Drawn	15.09.2017	KRP
Prepared	15.09.2017	MLD
Checked	15.09.2017	RPM
Approved	15.09.2017	RPM

Description
INSTALLATION STANDARDS – FIRE ALARM SYSTEM MULTI-SENSOR DETECTOR IN FALSE FLOOR TYPE-2 (FMDF3)

ISO A4

UH_BO_ISO_A4_P_E_tktSIndia.dwg / AG03_UH_BO_ISO_A4_P.dwg / 14.12.2016

© thyssenkrupp Industrial Solutions (India) Private Limited 2017. All rights reserved

UH_BO_ISO_A4_P_E_tktSIndia.dwg / AG03_UH_BO_ISO_A4_P.dwg / 14.12.2016

ITEM	DESCRIPTION	MATERIAL	QTY.	SUPPLY BY	INSTALLATION BY
1	MULTI-SENSOR DETECTOR WITH BASE AND JUNCTION BOX	–	1 NO.	CLIENT	ELECTRICAL CONTRACTOR
2	HARDWARE TO FIX DETECTOR, JUNCTION BOX SUCH AS SUITABLE SIZE SCREWS ETC. (REFER NOTE-2)	HDGI	AS REQUIRED	ELECTRICAL CONTRACTOR	ELECTRICAL CONTRACTOR
3	ISMC 75	M.S. PAINTED	AS REQUIRED	(REFER NOTE-3 & 4)	

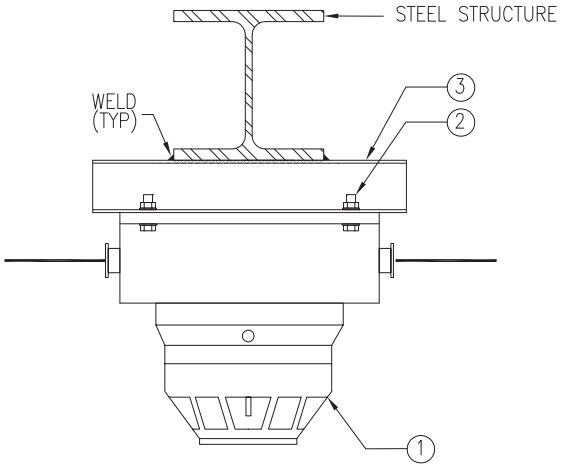

DRAWING NOT TO SCALE

NOTES
1) ALL DIMENSION ARE IN 'mm' UNLESS OTHERWISE SPECIFIED.
2) STEEL SECTIONS SHALL BE PREFABRICATED & PAINTED BEFORE INSTALLATION. AREA AFFECTED DUE TO SITE WELDING SHALL BE CLEANED AND PAINTED.
3) THESE DETAILS SHALL BE VERIFIED WITH ORDERED EQUIPMENT DRAWING.
4) SUPPLY & INSTALLATION OF STEEL IS NOT PART OF THIS INSTALLATION ARRANGEMENT. SAME IS COVERED ELSEWHERE.

Code	Contract No.	Document ID	Part	Rev.
		PIN-LEP-ELT-4011		00

Rev.	Date	Name (Drawn/Prepared)	Date	Name (Checked)	Date	Name (Approved)	Description	Acc. Code	Cat. Code	Acc. Code	Status
00	15.09.2017	KRP / MLD	15.09.2017	RPM	15.09.2017	RPM	ISSUED AS STANDARD				

BAR-Code

Store Location: Server/Share
Store Location: Folder
Store Name FMDS1

Pro. Unit	TON	Group	Type of Document	Sheet
				1 / 1

Con. Unit	Scale	Order No.
	NTS	

thyssenkrupp

	Date	Name
Drawn	15.09.2017	KRP
Prepared	15.09.2017	MLD
Checked	15.09.2017	RPM
Approved	15.09.2017	RPM

Description
INSTALLATION STANDARDS – FIRE ALARM SYSTEM
MULTI-SENSOR DETECTOR ON
STEEL STRUCTURE
(FMDS1)

ISO A4

© thyssenkrupp Industrial Solutions (India) Private Limited 2017. All rights reserved

ITEM	DESCRIPTION	MATERIAL	QTY.	SUPPLY BY	INSTALLATION BY
1	RESPONSE INDICATOR (REFER NOTE–2)	–	1 NO.	CLIENT	ELECTRICAL CONTRACTOR
2	JUNCTION BOX OF SUITABLE SIZE WITH FIXING ACCESSORIES & CABLE ENTRIES (REFER NOTE– 2 & 3)	–	1 NO.	ELECTRICAL CONTRACTOR	ELECTRICAL CONTRACTOR

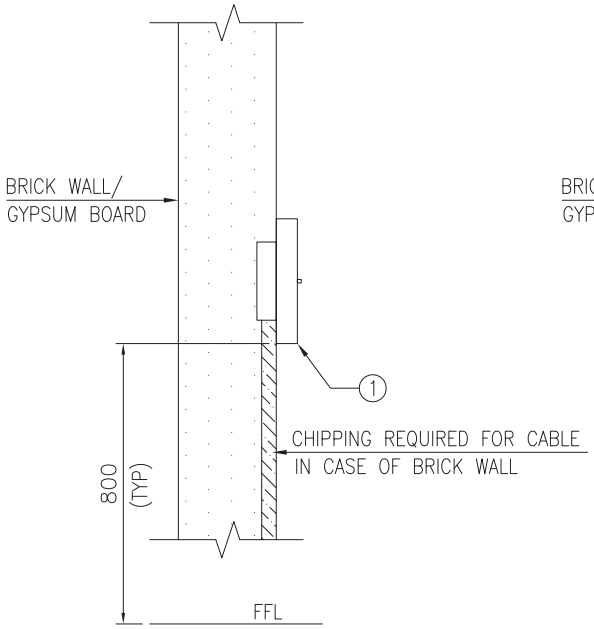

VARIATION–1 (TYPE V1)
INSTALLATION OF A RESPONSE INDICATOR

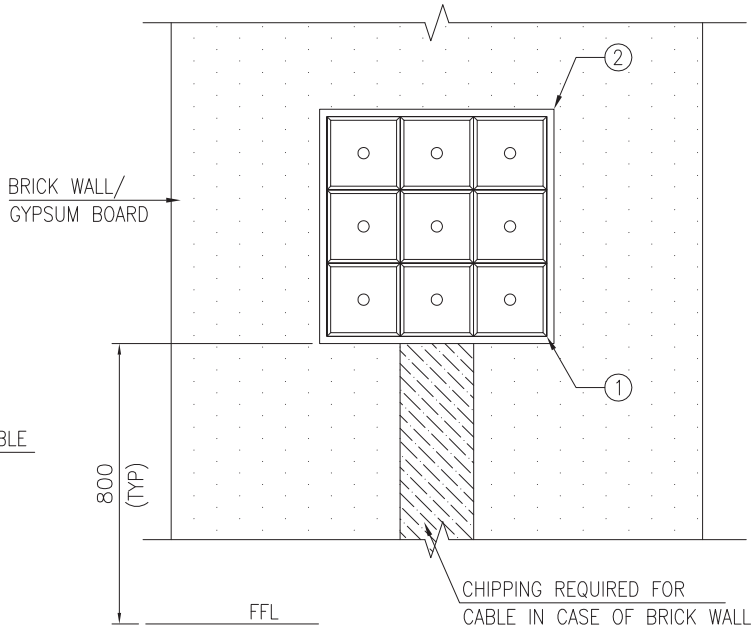

VARIATION–2 (TYPE V2)
INSTALLATION OF MULTIPLE RESPONSE INDICATORS

DRAWING NOT TO SCALE

NOTES
1) ALL DIMENSION ARE IN 'mm' UNLESS OTHERWISE SPECIFIED.
2) HARDWARE REQUIRED FOR INSTALLATION OF RESPONSE INDICATOR, JB SHALL BE SUPPLIED & INSTALLED BY ELECTRICAL CONTRACTOR.
3) JB SHALL BE INSTALLED IN CASE OF BRICK WALL. IN CASE OF GYPSUM BOARD, RESPONSE INDICATOR SHALL BE DIRECTLY FIXED.

Code	Contract No.	Document ID	Part	Rev.
		PIN–LEP–ELT–4011		00

Rev.	Date	Name (Drawn/Prepared)	Date	Name (Checked)	Date	Name (Approved)	Description	Acc. Code	Cat. Code	Acc. Code	Status
00	15.09.2017	KRP	MLD	15.09.2017	RPM	15.09.2017	RPM	ISSUED AS STANDARD			

BAR–Code

Store Location: Server/Share
Store Location: Folder
Store Name FRIC1

Pro. Unit	TON	Group	Type of Document	Sheet
				1 / 1

Con. Unit	Scale	Order No.
	NTS	

thyssenkrupp

	Date	Name
Drawn	15.09.2017	KRP
Prepared	15.09.2017	MLD
Checked	15.09.2017	RPM
Approved	15.09.2017	RPM

Description
INSTALLATION STANDARDS – FIRE ALARM SYSTEM
RESPONSE INDICATOR CONCEALED IN WALL/
GYPSUM BOARD
(FRIC1)

ISO A4

UH_BO_ISO_A4_P_E_tktSIndia.dwg / AG03_UH_BO_ISO_A4_P.dwg / 14.12.2016

© thyssenkrupp Industrial Solutions (India) Private Limited 2017. All rights reserved

ITEM	DESCRIPTION	MATERIAL	QTY.	SUPPLY BY	INSTALLATION BY
1	RESPONSE INDICATOR (REFER NOTE-2)	–	1 NO.	CLIENT	ELECTRICAL CONTRACTOR

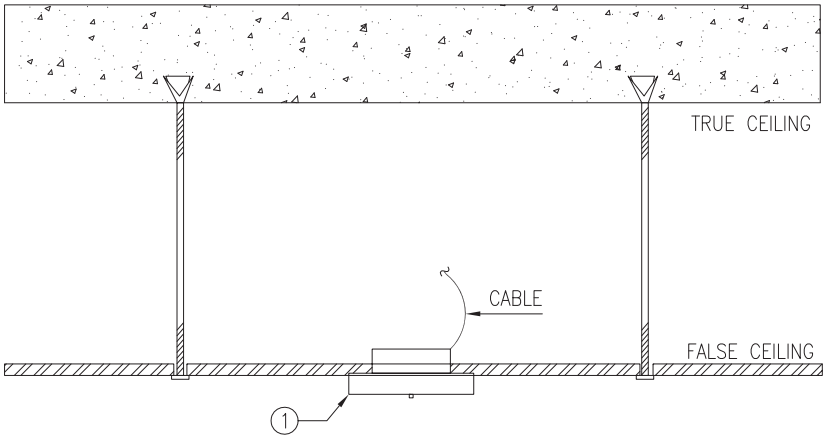

DRAWING NOT TO SCALE

NOTES
1) ALL DIMENSION ARE IN 'mm' UNLESS OTHERWISE SPECIFIED.
2) HARDWARE REQUIRED FOR INSTALLATION OF RESPONSE INDICATOR SHALL BE SUPPLIED & INSTALLED BY ELECTRICAL CONTRACTOR.

Code	Contract No.	Document ID	Part	Rev.
		PIN-LEP-ELT-4011		00

Rev.	Date	Name (Drawn/Prepared)	Date	Name (Checked)	Date	Name (Approved)	Description	Acc. Code	Cat. Code	Acc. Code	Status
00	15.09.2017	KRP	15.09.2017	MLD	15.09.2017	RPM	15.09.2017	RPM	ISSUED AS STANDARD		

BAR-Code

Store Location: Server/Share
Store Location: Folder
Store Name FRIF1

Pro. Unit	TON	Group	Type of Document	Sheet
				1 / 1

Con. Unit	Scale	Order No.
	NTS	

thyssenkrupp

	Date	Name
Drawn	15.09.2017	KRP
Prepared	15.09.2017	MLD
Checked	15.09.2017	RPM
Approved	15.09.2017	RPM

Description
INSTALLATION STANDARDS – FIRE ALARM SYSTEM
RESPONSE INDICATOR ON FALSE CEILING
(FRIF1)

ISO A4

UH_BO_ISO_A4_P_E_tktSIndia.dwg / AG03_UH_BO_ISO_A4_P.dwg / 14.12.2016

© thyssenkrupp Industrial Solutions (India) Private Limited 2017. All rights reserved

ITEM	DESCRIPTION	MATERIAL	QTY.	SUPPLY BY	INSTALLATION BY
1	LINEAR HEAT SENSING CABLE WITH FIXING ACCESSORIES	–	–	CLIENT	ELECTRICAL CONTRACTOR

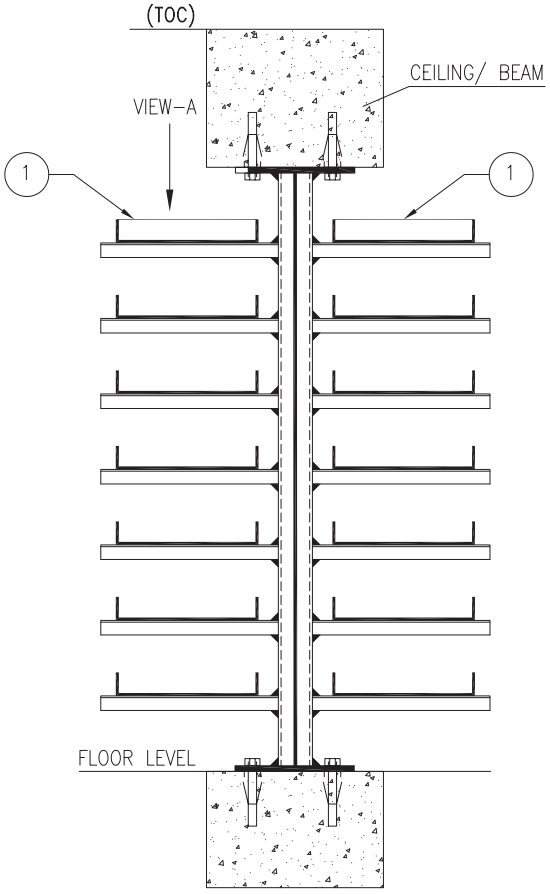

TRAY ARRANGEMENT IN CABLE CELLAR
(TYP)

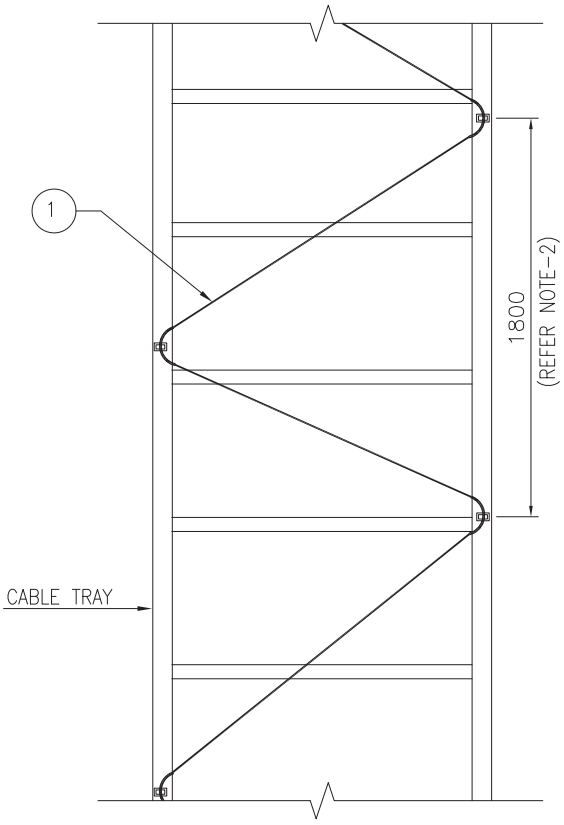

VIEW–A

DRAWING NOT TO SCALE

NOTES
1) ALL DIMENSION ARE IN 'mm' UNLESS OTHERWISE SPECIFIED.
2) DISTANCE OF FIXING INDICATED IS TYPICAL. IT SHALL BE VERIFIED WITH VENDOR DRAWING.

Code	Contract No.	Document ID	Part	Rev.
		PIN–LEP–ELT–4011		00

Rev.	Date	Name (Drawn/Prepared)	Date	Name (Checked)	Date	Name (Approved)	Description	Acc. Code	Cat. Code	Acc. Code	Status
00	15.09.2017	KRP	MLD	15.09.2017	RPM	15.09.2017	RPM	ISSUED AS STANDARD			

BAR–Code

Store Location: Server/Share
Store Location: Folder
Store Name FSCT1

Pro. Unit	TON	Group	Type of Document	Sheet
				1 / 1

Con. Unit	Scale	Order No.
	NTS	

thyssenkrupp

	Date	Name
Drawn	15.09.2017	KRP
Prepared	15.09.2017	MLD
Checked	15.09.2017	RPM
Approved	15.09.2017	RPM

Description
INSTALLATION STANDARDS – FIRE ALARM SYSTEM
LINEAR HEAT SENSING CABLE ON
CABLE TRAY
(FSCT1)

ISO A4

UH_BO_ISO_A4_P_E_tktSIndia.dwg / AG03_UH_BO_ISO_A4_P.dwg / 14.12.2016

© thyssenkrupp Industrial Solutions (India) Private Limited 2017. All rights reserved